IDA

PROFIELOVERZICHT ..... 5
APERCU DES PROFILES
PROFILUEBERSICHT
PROFILE OVERVIEW

TOEBEHOREN ..... 21
ACCESSOIRES
ZUBEHORTEILE
ACCESSORIES

DOORSNEDETEKENINGEN ..... 39
SECTION DE NOEUDS
PROFILKOMBINATIONEN
SECTION DRAWINGS

ZAAGTABELLEN ..... 153
COUPES ET DEBITS
ZUSCHNITTSTABELLEN
FABRICATION CHARTS

WERKTEKENINGEN ..... 205
DESSINS DE CONSTRUCTION
KONSTRUKTIONZEICHNUNGEN
CONSTRUCTION DRAWINGS

aliplast
member of
CORIALIS

7/7/20

VOOR MEER INFO IN VERBAND MET DE VOORBEREIDING / VERWERKING
RAADPLEEG ONZE ALGEMENE VERWERKINGSVOORSCHRIFTEN

POUR PLUS D'INFORMATIONS CONCERNANT LA PREPARATION / USINAGE
CONSULTEZ NOS RECOMMANDATIONS DE TRAITEMENT

FÜR WEITERE INFORMATIONEN ÜBER DIE VORBEREITUNG / VERARBEITUNG
KONSULTIEREN SIE UNSERE VERARBEITUNGSVORSCHRIFTEN

FOR MORE INFORMATION CONCERNING THE PREPARATION / PROCESSING
CONSULT OUR GENERAL PROCESSING INSTRUCTIONS

De tekeningen die voorgesteld zijn op schaal 1:1, kunnen kleine maatafwijkingen vertonen, te wijten aan de reproductietechniek van deze cataloog.

Les dessins représentés à l'échelle 1 peuvent avoir de légères variations dimensionnelles dues aux techniques de reproduction de ce catalogue.

Die Zeichnungen im Maßstab 1:1 können aus technischen Reproduktionsgründen leichte Messung Schwankungen darstellen.

The drawings represented on a scale 1 basis may have light dimensional variations due to the reproduction of the manual.

| DATUM<br>DATE<br>DATUM<br>DATE | OMSCHRIJVING<br>DESCRIPTION<br>BESCHREIBUNG<br>DESCRIPTION |
|---|---|
| 2018 | EERSTE DRUK<br>PREMIERE EDITION<br>ERSTAUSGABE<br>FIRST EDITION |
| 30/01/2019 | X SIN120 --> SIN121<br>X SIN220 --> SIN221<br>>> SIN035<br>>> SIN061<br>>> ACSIN201, ACSIN202, ... |
| 11/03/2019 | >> WERKTEKENINGEN-DESSINS DE CONSTRUCTION-KONSTRUKTIONZEICHNUNGEN-CONSTRUCTION DRAWINGS<br>VERSTEVIGINGSPROFIEL<br>PROFILE DE RENFORCEMENT<br>VERSTAERKUNGSPROFIL<br>REINFORCEMENT PROFILE |
| 02/04/2019 | !> ZAAGTABELLEN-COUPES ET DEBITS-ZUSCHNITTSTABELLEN-FABRICATION CHARTS<br>45° --> 90°<br>>> ACSIN630 |
| 23/04/2019 | !> WERKTEKENINGEN-DESSINS DE CONSTRUCTION-KONSTRUKTIONZEICHNUNGEN-CONSTRUCTION DRAWINGS<br>ACSIN430<br>!> WERKTEKENINGEN-DESSINS DE CONSTRUCTION-KONSTRUKTIONZEICHNUNGEN-CONSTRUCTION DRAWINGS<br>ACSIN620/ACSIN630<br>>> ZAAGTABELLEN-COUPES ET DEBITS-ZUSCHNITTSTABELLEN-FABRICATION CHARTS<br>TAATSDEUR001A2<br>TAATSDEUR001B2<br>TAATSDEUR001D2 |
| 03/06/2019 | >> ZAAGTABELLEN-COUPES ET DEBITS-ZUSCHNITTSTABELLEN-FABRICATION CHARTS<br>SCHARNIER002A_N_SLOT<br>>> WERKTEKENINGEN-DESSINS DE CONSTRUCTION-KONSTRUKTIONZEICHNUNGEN-CONSTRUCTION DRAWINGS<br>ACSIN950 & ACSIN951<br>OVERZICHT INBOUW<br>APERCU MONTAGE<br>UEBERSICHT BEFESTIGUNG<br>OVERVIEW FITTING |
| 10/07/2019 | >> ACSIN630-250, ACSIN630-400 & ACSIN630-500 |
| 09/10/2019 | >> SIN092, SIN093 & SIN094<br>>> SCHUIFDEUR-PORTE COULISSANTE-SCHIEBETUR-SLIDING DOOR<br>ACSIN510 - ... - ACSIN561<br>!> WERKTEKENINGEN-DESSINS DE CONSTRUCTION-KONSTRUKTIONZEICHNUNGEN-CONSTRUCTION DRAWINGS<br>OVERZICHT INBOUW-APERCU MONTAGE-UEBERSICHT BEFESTIGUNG-OVERVIEW FITTING |
| 15/10/2019 | >> ZAAGTABELLEN-COUPES ET DEBITS-ZUSCHNITTSTABELLEN-FABRICATION CHARTS<br>VERBORGEN001A_SLOT |

| DATUM<br>DATE<br>DATUM<br>DATE | OMSCHRIJVING<br>DESCRIPTION<br>BESCHREIBUNG<br>DESCRIPTION |
|---|---|
| 24/10/2019 | >> WERKTEKENINGEN-DESSINS DE CONSTRUCTION-KONSTRUKTIONZEICHNUNGEN-CONSTRUCTION DRAWINGS<br>VERBORGEN SCHARNIER - CHARNIERE CACHE - VERBORGEN BAND - CONCEALED HINGE |
| 31/10/2019 | >> WERKTEKENINGEN-DESSINS DE CONSTRUCTION-KONSTRUKTIONZEICHNUNGEN-CONSTRUCTION DRAWINGS<br>SIN092 - SIN094 |
| 08/01/2020 | >> WERKTEKENINGEN-DESSINS DE CONSTRUCTION-KONSTRUKTIONZEICHNUNGEN-CONSTRUCTION DRAWINGS<br>OVERZICHT INBOUW - APERCU MONTAGE UEBERSICHT - BEFESTIGUNG - OVERVIEW FITTING<br>PIVOTDEUR - PORTE PIVOTANTE - SCHWINGTEUR - PIVOT DOOR<br>VERBORGEN SCHARNIER - CHARNIERE CACHE - VERBORGEN BAND - CONCEALED HINGE |
| 27/01/2020 | >> ACMX830Z, ACMX834Z & ACMX837Z |
| 04/02/2020 | >> WERKTEKENINGEN-DESSINS DE CONSTRUCTION-KONSTRUKTIONZEICHNUNGEN-CONSTRUCTION DRAWINGS<br>ACSIN203<br>ACSIN400R/L |
| 08/04/2020 | >> ZAAGTABELLEN-COUPES ET DEBITS-ZUSCHNITTSTABELLEN-FABRICATION CHARTS<br>TAATSDEUR001D3<br>SCHARNIER003A_N_SLOT |
| 07/07/2020 | >> ACSIN401, ACSIN402 & ACSIN450<br>>> SIN420 & SIN421<br>X ACSIN200 |

--> WIJZIGING CHANGEMENT ANDERUNG CHANGE
X VERWIJDERD SUPPRIME ENTFERNT REMOVED
>> TOEGEVOEGD AJOUTE HINZUGEFUGT ADDED
!> AANGEPAST ADAPTE ANGEPASST ADJUSTED



aliplast member of CORIALIS

| NUMMER<br>NUMERO<br>NUMMER<br>NUMBER | AFBEELDING<br>IMAGE<br>BILD<br>PICTURE | OMSCHRIJVING<br>DESCRIPTION<br>BESCHREIBUNG<br>DESCRIPTION | BLAD<br>PAGE<br>SEITE<br>PAGE | OMTREK<br>PERIM.<br>PERIM.<br>PERIM.<br>(MM) | MECH.<br>MEC.<br>MECH.<br>MEC.<br>(MM) | IX (CM4)<br>----------<br>WX (CM3) | IY (CM4)<br>----------<br>WY (CM3) | LENGTE<br>LONG.<br>LANGE<br>LENGTH<br>(M) |
|---|---|---|---|---|---|---|---|---|
| **SIN020** | | VLEUGELPROFIEL<br>OUVRANT<br>FLÜGELPROFIL<br>VENT PROFILE | 10 | 192 | 117 | 2.4<br>----------<br>1.0 | 5.3<br>----------<br>1.7 | 6.5 |
| **SIN021** | | VLEUGELPROFIEL<br>OUVRANT<br>FLÜGELPROFIL<br>VENT PROFILE | 10 | 221 | 146 | 3.1<br>----------<br>1.2 | 12.8<br>----------<br>4.3 | 6.5 |
| **SIN030** | | TUSSENREGEL<br>TRAVERS<br>SPROSSENPROFIL<br>TRAMSON<br><br>40 MM | 12 | 133 | 52 | 1.8<br>----------<br>0.9 | 0.3<br>----------<br>0.3 | 6.5 |
| **SIN035** |  | KLEINHOUT<br>PETIT BOIS<br>ZIERSPROSSE<br>ORNAMENTAL BAR<br><br>40 MM | 12 | 91 | 52 | / | / | 6.5 |
| **SIN050** |  | KLEMPROFIEL<br>SERREUR<br>GLASHALTEPROFIL<br>PRESSURE PLATE<br><br>40 MM | 13 | 105 | 43 | / | / | 6.5 |
| **SIN060** | | AFDEKPROFIEL<br>PROFILE DE RECOUVREMENT<br>ABDECKPROFIL<br>COVERING PROFILE | 16 | 118 | 61 | / | / | 6.5 |
| **SIN061** | | AFDEKPROFIEL<br>PROFILE DE RECOUVREMENT<br>ABDECKPROFIL<br>COVERING PROFILE | 16 | 144 | 61 | / | / | 6.5 |
| **SIN090** | | STEUNPROFIEL<br>PROFILE DE SUPPORT<br>SPARRENAUFLAGEPROFIL<br>RAFTER HOLDER | 16 | 121 | 64 | / | / | 6.5 |

| NUMMER<br>NUMERO<br>NUMMER<br>NUMBER | AFBEELDING<br>IMAGE<br>BILD<br>PICTURE | OMSCHRIJVING<br>DESCRIPTION<br>BESCHREIBUNG<br>DESCRIPTION | BLAD<br>PAGE<br>SEITE<br>PAGE | OMTREK<br>PERIM.<br>PERIM.<br>PERIM.<br>(MM) | MECH.<br>MEC.<br>MECH.<br>MEC.<br>(MM) | IX (CM4)<br>----------<br>WX (CM3) | IY (CM4)<br>----------<br>WY (CM3) | LENGTE<br>LONG.<br>LANGE<br>LENGTH<br>(M) |
|---|---|---|---|---|---|---|---|---|
| **SIN092** | | BUITENKADER<br>DORMANT<br>RAHMENPROFIL<br>OUTER FRAME<br><br>16 MM | 9 | 190 | 79 | 0.3<br>----------<br>0.3 | 7.4<br>----------<br>2.7 | 6.5 |
| **SIN093** | | AFWERKINGSPROFIEL<br>PROFILE DE FINITION<br>AUSFUEHRUNGSPROFIL<br>FINISHING PROFILE<br><br>20 MM | 9 | 210 | 91 | 1.3<br>----------<br>0.8 | 7.8<br>----------<br>3.1 | 6.5 |
| **SIN094** | | TUSSENREGEL<br>TRAVERS<br>SPROSSENPROFIL<br>TRAMSON<br><br>21 MM | | 159 | 136 | 0.4<br>----------<br>0.4 | 7.7<br>----------<br>2.7 | 6.5 |
| **SIN121** | 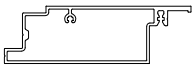 | AFDEKPROFIEL SLOT<br>PROFILE DE RECOUVREMENT FERMETURE<br>ABDECKPROFIL VERSCHLUSS<br>COVERING PROFILE LOCK | 15 | 347 | 223 | 87.4<br>----------<br>13.9 | 15.0<br>----------<br>7.0 | 6.5<br>1.08 |
| **SIN150** |  | KLEMPROFIEL<br>SERREUR<br>GLASHALTEPROFIL<br>PRESSURE PLATE<br><br>27.3 MM | | 78 | 22 | / | / | 6.5 |
| **SIN221** | 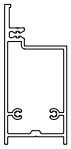 | AFDEKPROFIEL TAATS<br>PROFILE DE RECOUVREMENT PIVOT<br>ABDECKPROFIL DREHSCHALENLAGER<br>COVERING PROFILE PIVOT | 15 | 318 | 192 | 15.6<br>----------<br>6.6 | 45.4<br>----------<br>8.8 | 6.5<br>2.15 |
| **SIN320** | | AFDEKPROFIEL VERBORGEN SCHARNIER<br>PROFILE DE RECOUVREMENT CHARNIERE CACHE<br>ABDECKPROFIL VERBORGEN BAND<br>COVERING PROFILE CONCEALED HINGE | 14 | 253 | 85 | 7.9<br>----------<br>2.6 | 7.4<br>----------<br>2.8 | 6.5 |
| **SIN420** | | VLEUGELPROFIEL<br>OUVRANT<br>FLÜGELPROFIL<br>VENT PROFILE | 11 | 198 | 125 | 2.6<br>----------<br>1.1 | 6.9<br>----------<br>2.4 | 6.5 |

| NUMMER<br>NUMERO<br>NUMMER<br>NUMBER | AFBEELDING<br>IMAGE<br>BILD<br>PICTURE | OMSCHRIJVING<br>DESCRIPTION<br>BESCHREIBUNG<br>DESCRIPTION | BLAD<br>PAGE<br>SEITE<br>PAGE | OMTREK<br>PERIM.<br>PERIM.<br>PERIM.<br>(MM) | MECH.<br>MEC.<br>MECH.<br>MEC.<br>(MM) | IX (CM4)<br>----------<br>WX (CM3) | IY (CM4)<br>----------<br>WY (CM3) | LENGTE<br>LONG.<br>LANGE<br>LENGTH<br>(M) |
|---|---|---|---|---|---|---|---|---|
| **SIN421** | | VLEUGELPROFIEL<br>OUVRANT<br>FLÜGELPROFIL<br>VENT PROFILE | 11 | 246 | 161 | 3.5<br>----------<br>1.3 | 13.5<br>----------<br>4.6 | 6.5 |
| **UTL090** | | RECHTHOEKIGE BUIS<br>TUBE RECTANGULAIRE<br>RECHTECKROHRE<br>RECTANGULAR TUBE<br><br>45x25x2 ALU | 18 | 140 | 140 | / | / | 6.0 |
| **UTL108** | | RECHTHOEKIGE BUIS<br>TUBE RECTANGULAIRE<br>RECHTECKROHRE<br>RECTANGULAR TUBE<br><br>45x45x2 ALU | 18 | 180 | 180 | / | / | 6.0 |
| **UTL111** | | U-PROFIEL<br>PROFILE U<br>U-PROFILE<br>U CHANNEL<br><br>10x10x10x1.5 ALU | 17 | 57 | 57 | / | / | 6.0 |
| **UTLRB408** |  | RECHTHOEKIGE STAAF<br>BARRE RECTANGULAIRE<br>FLACHPROFIL<br>RECTANGULAR BAR<br><br>45x3 ALU | 19 | 96 | 96 | / | / | 6.0 |
| **UTLRB453** |  | RECHTHOEKIGE STAAF<br>BARRE RECTANGULAIRE<br>FLACHPROFIL<br>RECTANGULAR BAR<br><br>45x3 ALU | 19 | 96 | 96 | / | / | 6.0 |
| **UTLRB3010** |  | RECHTHOEKIGE STAAF<br>BARRE RECTANGULAIRE<br>FLACHPROFIL<br>RECTANGULAR BAR<br><br>30x10 ALU | 19 | 80 | 80 | / | / | 6.0 |
| **UTLRB6010** |  | RECHTHOEKIGE STAAF<br>BARRE RECTANGULAIRE<br>FLACHPROFIL<br>RECTANGULAR BAR<br><br>60x10 ALU | 19 | 140 | 140 | / | / | 6.0 |

| NUMMER<br>NUMERO<br>NUMMER<br>NUMBER | AFBEELDING<br>IMAGE<br>BILD<br>PICTURE | OMSCHRIJVING<br>DESCRIPTION<br>BESCHREIBUNG<br>DESCRIPTION | BLAD<br>PAGE<br>SEITE<br>PAGE | OMTREK<br>PERIM.<br>PERIM.<br>PERIM.<br>(MM) | MECH.<br>MEC.<br>MECH.<br>MEC.<br>(MM) | IX (CM4)<br>----------<br>WX (CM3) | IY (CM4)<br>----------<br>WY (CM3) | LENGTE<br>LONG.<br>LANGE<br>LENGTH<br>(M) |
|---|---|---|---|---|---|---|---|---|
| **UTLRB8010** | 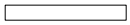 | RECHTHOEKIGE STAAF<br>BARRE RECTANGULAIRE<br>FLACHPROFIL<br>RECTANGULAR BAR<br><br>80x10 ALU | 19 | 180 | 180 | / | / | 6.0 |
| **UTLRB10010** | 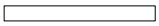 | RECHTHOEKIGE STAAF<br>BARRE RECTANGULAIRE<br>FLACHPROFIL<br>RECTANGULAR BAR<br><br>100x10 ALU | 19 | 220 | 220 | / | / | 6.0 |
| **VS532** |  | BORSTELHOUDER<br>PROFIL POUR BROSSE<br>PROFILE FUR BURSTE<br>PROFILE FOR BRUSH | 16 | 69 | 29 | / | / | 6.5 |



aliplast
member of
CORIALIS

BUITENKADER
DORMANT
RAHMENPROFIL
OUTER FRAME



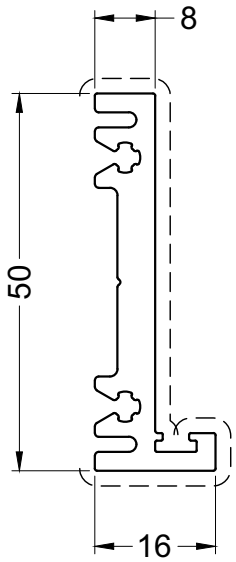


SIN092

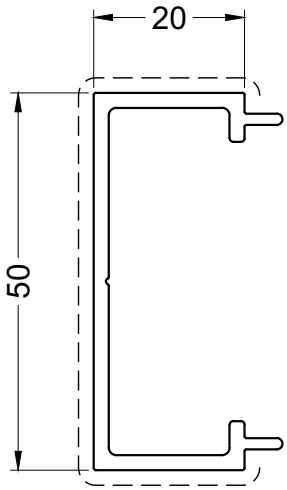


SIN093

BUITENKADER001

Primaire zichtzijde
Côté visible primaire

Primäre sichtbare Seite
Primary visible side

VLEUGEL
OUVRANT FENETRE
FLUGEL
VENT

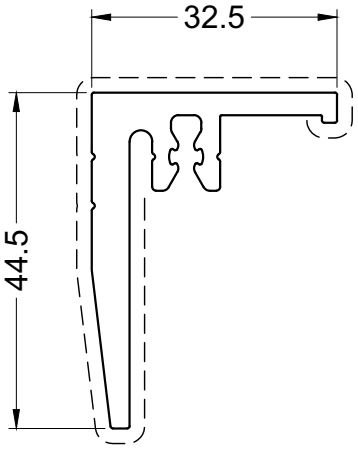


SIN020

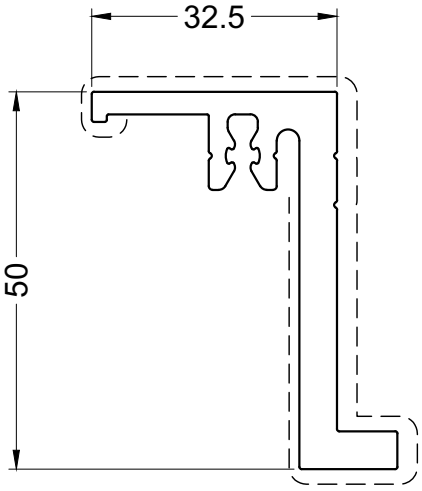


SIN021

VLEUGEL001

Primaire zichtzijde
Côté visible primaire
Primäre sichtbare Seite
Primary visible side

VLEUGEL
OUVRANT FENETRE
FLUGEL
VENT



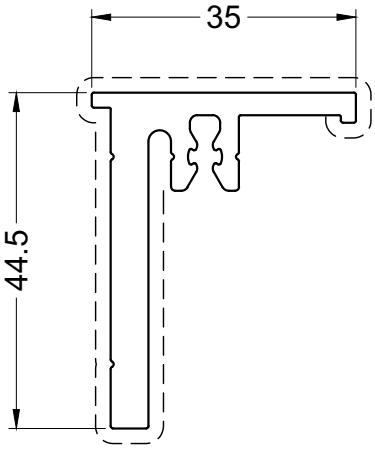


SIN420

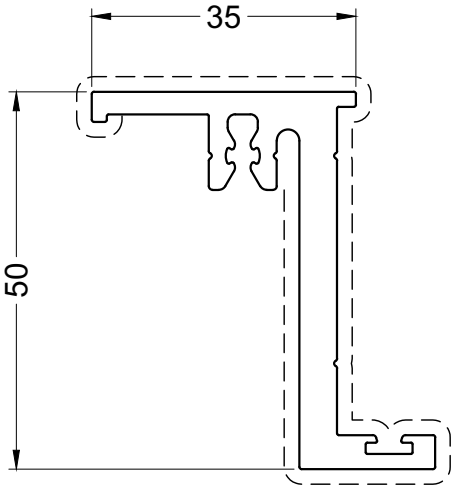


SIN421

VLEUGEL003

- - - - - Primaire zichtzijde / Côté visible primaire / Primäre sichtbare Seite / Primary visible side

TUSSENREGEL
TRAVERS
SPROSSENPROFIL
TRANSOM

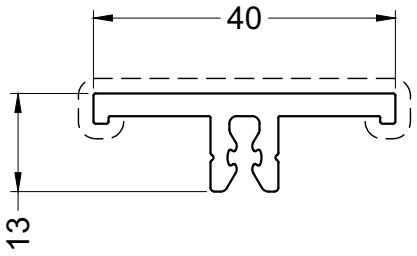


SIN030

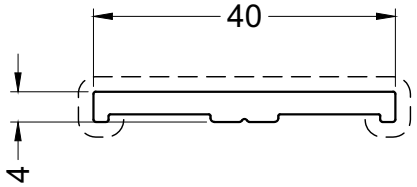


SIN035

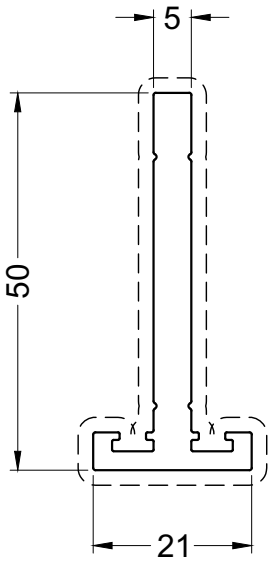


SIN094

TUSSENREGEL001

Primaire zichtzijde
Côté visible primaire
Primäre sichtbare Seite
Primary visible side

KLEMPROFIEL
SERREUR
GLASHALTEPROFIL
PRESSURE PLATE

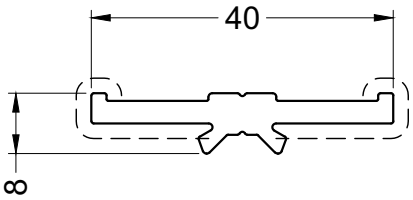


SIN050

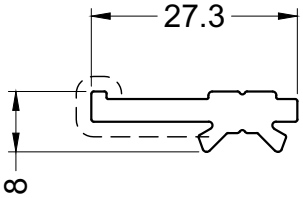


SIN150

KLEMPROFIEL001

Primaire zichtzijde
Côté visible primaire

Primäre sichtbare Seite
Primary visible side

AFDEKPROFIEL
PROFILE DE RECOUVREMENT
ABDECKPROFIL
COVERING PROFILE

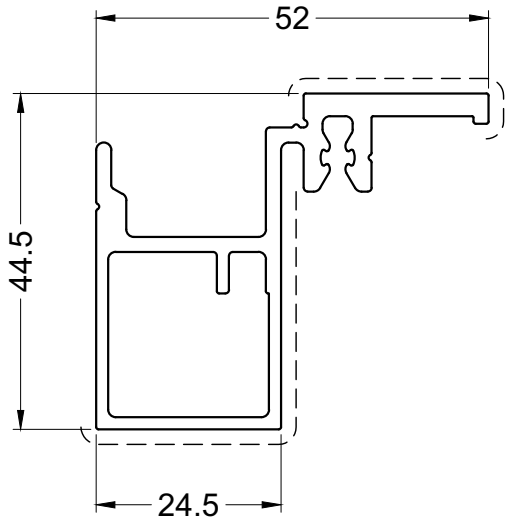


SIN320

AFDEKPROFIEL001

Primaire zichtzijde
Côté visible primaire

Primäre sichtbare Seite
Primary visible side

AFDEKPROFIEL
PROFILE DE RECOUVREMENT
ABDECKPROFIL
COVERING PROFILE

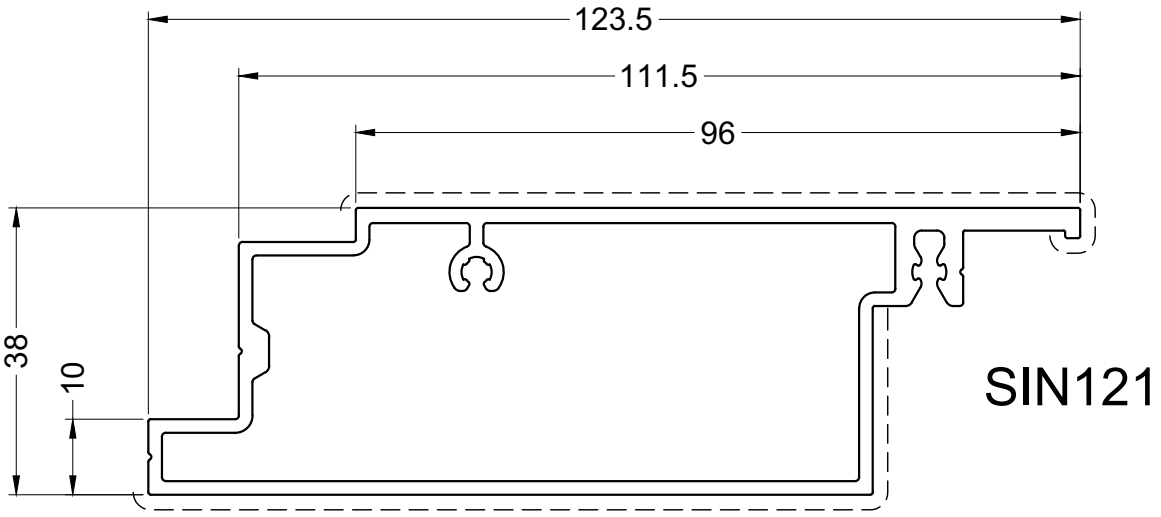


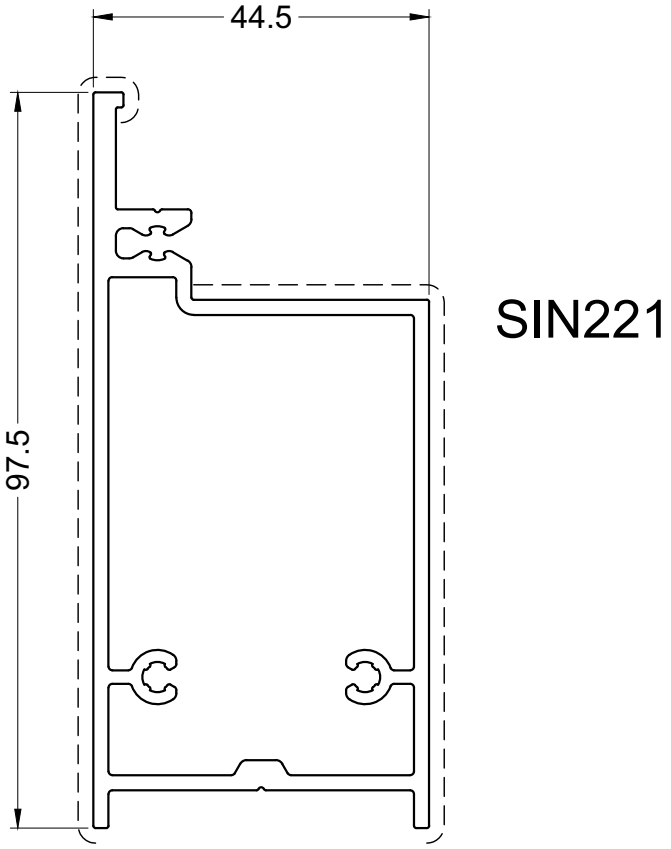


AFDEKPROFIEL002

Primaire zichtzijde
Côté visible primaire
Primäre sichtbare Seite
Primary visible side

DIVERSE PROFIELEN
PROFILES DIVERS
ZUSATZPROFILE
VARIOUS PROFILES

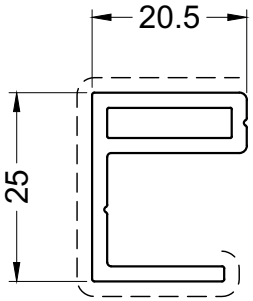


SIN090

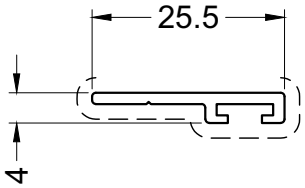


VS532

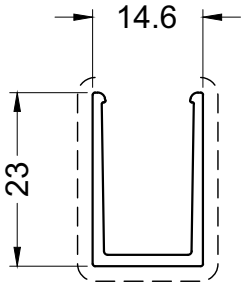


SIN060

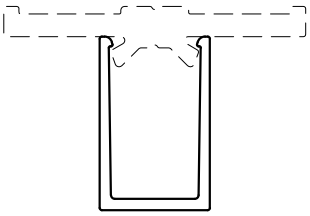

SIN050
SIN150
...

SIN060

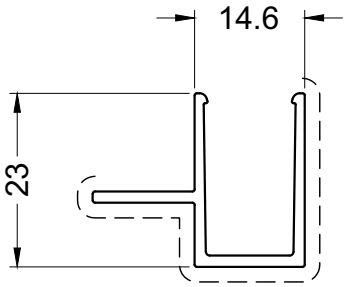


SIN061

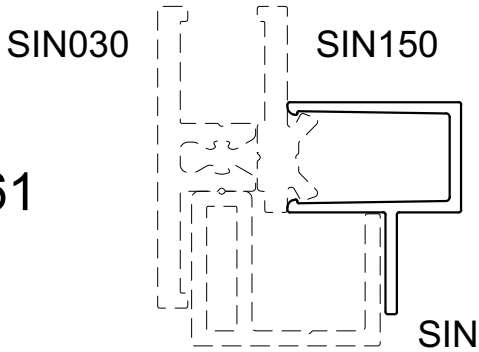


DIVERS001

Primaire zichtzijde
Côté visible primaire

Primäre sichtbare Seite
Primary visible side

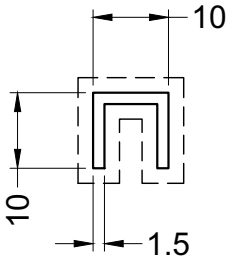


UTL111

DIVERS002

Primaire zichtzijde
Côté visible primaire

Primäre sichtbare Seite
Primary visible side

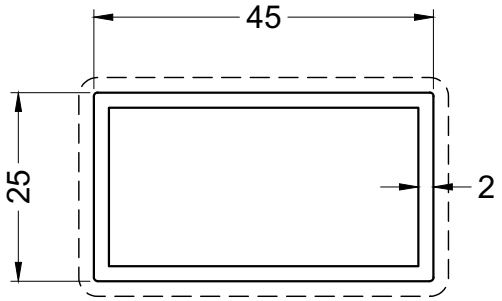


UTL090

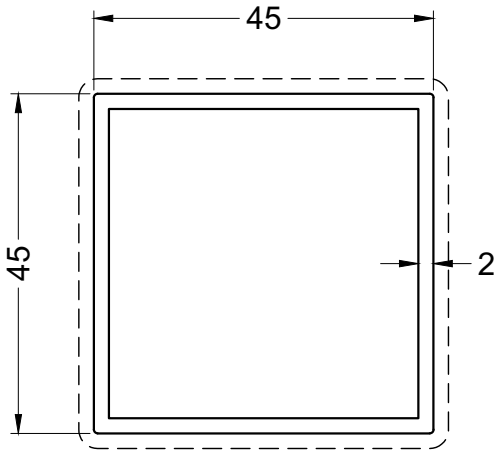


UTL108

STRUCTUUR001



Primaire zichtzijde
Côté visible primaire

Primäre sichtbare Seite
Primary visible side

DIVERSE PROFIELEN
PROFILES DIVERS
ZUSATZPROFILE
VARIOUS PROFILES

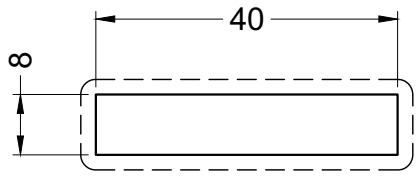


UTLRB408

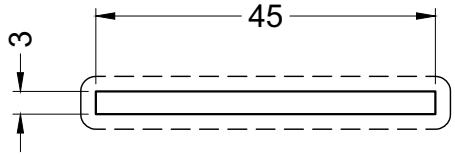


UTLRB453

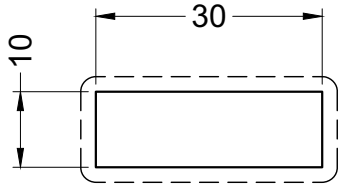


UTLRB3010

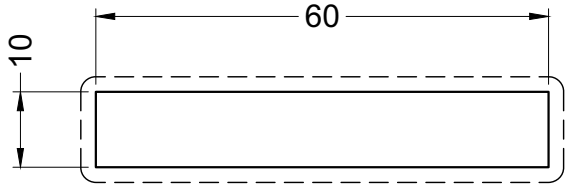


UTLRB6010

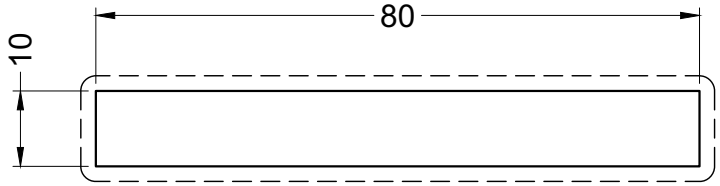


UTLRB8010

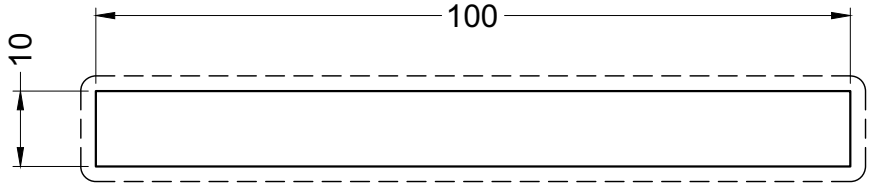


UTLRB10010

STRUCTUUR002

aliplast member of CORIALIS

- - - - - Primaire zichtzijde / Côté visible primaire / Primäre sichtbare Seite / Primary visible side

Primaire zichtzijde
Côté visible primaire

Primäre sichtbare Seite
Primary visible side

| AFBEELDING<br>IMAGE<br>BILD<br>PICTURE | OMSCHRIJVING<br>DESCRIPTION<br>BESCHREIBUNG<br>DESCRIPTION | TOEPASSING<br>APLPLICANTION<br>ANWENDUNG<br>APPLICATION | VERP.PER<br>EMB.PAR<br>PACK PR.<br>PACK PR. |
|---|---|---|---|
| 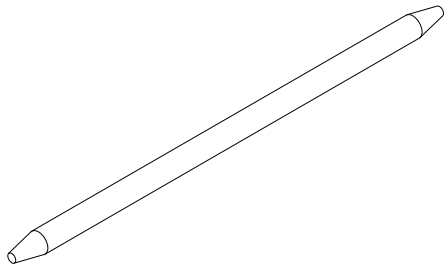 | **ACSIN030**<br>PEN VOOR REGEL<br>GOUPOILLES POUR TRAVERSE<br>STIFT FUR RIEGEL<br>PIN FOR TRANSOM | SIN030 | 50 |
| | **ACSIN050**<br>AFSTANDSHOUDER<br>ESPACEUR<br>DISTANZSTUCK<br>SPACER<br>H = 2 MM | SIN030<br>SIN020<br>SIN021 | 100M |
| | **ACSIN051**<br>AFSTANDSHOUDER<br>ESPACEUR<br>DISTANZSTUCK<br>SPACER<br>H = 4 MM | SIN030<br>SIN020<br>SIN021 | 100M |
| 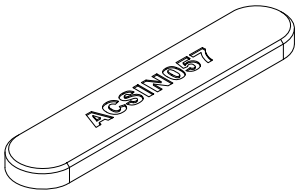 | **ACSIN057**<br>GLASSTEUN<br>SUPPORT CALE DE VITRAGE<br>GLASAUFLAGEPROFIL<br>GLASS SUPPORT | SIN030 | 100 |
| 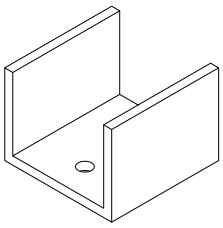 | **ACSIN100**<br>VERBINDINGSTUK<br>PIECE DE CONNEXION<br>VERBINDUNGSTÜCK<br>CONNECTION PIECE | UTL108 | 2 |

| AFBEELDING<br>IMAGE<br>BILD<br>PICTURE | OMSCHRIJVING<br>DESCRIPTION<br>BESCHREIBUNG<br>DESCRIPTION | TOEPASSING<br>APLPLICANTION<br>ANWENDUNG<br>APPLICATION | VERP.PER<br>EMB.PAR<br>PACK PR.<br>PACK PR. |
|---|---|---|---|
| 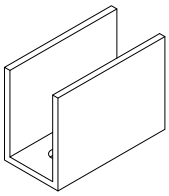 | **ACSIN101**<br><br>VERBINDINGSTUK<br>PIECE DE CONNEXION<br>VERBINDUNGSTÜCK<br>CONNECTION PIECE | UTL090 | 2 |
| 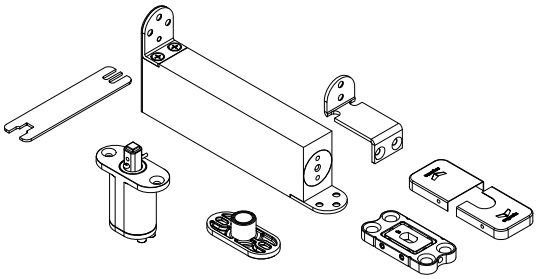 | **ACSIN201**<br><br>PIVOTSYSTEEM<br>SYSTEME PIVOT<br>SCHARNIERSYSTEM<br>PIVOT SYSTEM<br><br>MAX 100 KG | SIN221 | 1<br>10 |
| 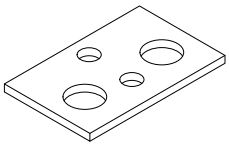 | **ACSIN202**<br><br>ONDERVULLING<br>SUPPORT<br>FUELLSTUECK<br>SUPPORT | ACSIN201<br>ACSIN204 | 10 |
| 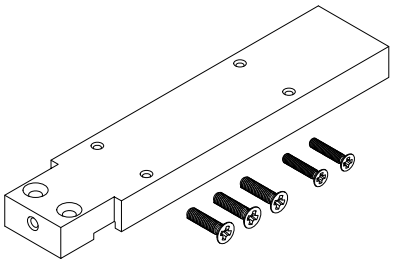 | **ACSIN203**<br><br>ONDERVULLING HOEK<br>SUPPORT EQUERRE<br>FUELLSTUECK ECKE<br>SUPPORT CORNER | ACSIN201 | 1 |
| 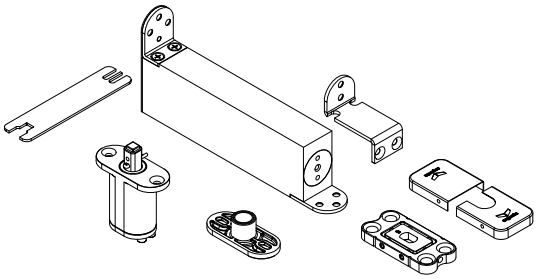 | **ACSIN204**<br><br>PIVOTSYSTEEM<br>SYSTEME PIVOT<br>SCHARNIERSYSTEM<br>PIVOT SYSTEM<br><br>MAX 150 KG | SIN221 | 1<br>10 |

| AFBEELDING<br>IMAGE<br>BILD<br>PICTURE | OMSCHRIJVING<br>DESCRIPTION<br>BESCHREIBUNG<br>DESCRIPTION | TOEPASSING<br>APLPLICANTION<br>ANWENDUNG<br>APPLICATION | VERP.PER<br>EMB.PAR<br>PACK PR.<br>PACK PR. |
|---|---|---|---|
| 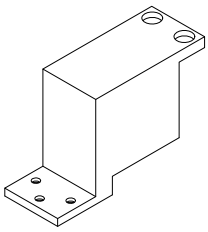 | **ACSIN205**<br>ONDERVULLING<br>SUPPORT<br>FUELLSTUECK<br>SUPPORT | ACSIN204 | 1 |
| 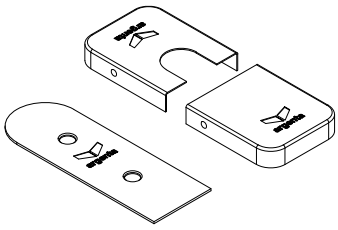 | **ACSIN206**<br>AFDEKSET<br>ENSEMBLE DE COUVERTURE<br>ABDECKSET<br>COVER SET<br>● | ACSIN204 | 1 |
| 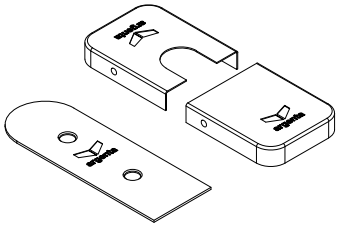 | **ACSIN207**<br>AFDEKSET<br>ENSEMBLE DE COUVERTURE<br>ABDECKSET<br>COVER SET<br>● | ACSIN201 | 1 |
| 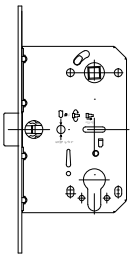 | **ACSIN300CY**<br>MAGNETISCH SLOT (CILINDERSLOT)<br>SERRURE MAGNETIQUE (SERRURE A CYLINDER)<br>MAGNETVERSCHLUSS (ZYLINDERSCHLOSS)<br>MAGNETIC LOCK (CYLINDER LOCK) | SIN020<br>SIN021<br>SIN121 | 1 |
| 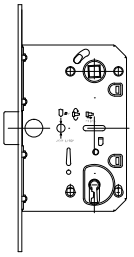 | **ACSIN300KE**<br>MAGNETISCH SLOT (SLEUTELSLOT)<br>SERRURE MAGNETIQUE (SERRURE A CLE)<br>MAGNETVERSCHLUSS (TASTENSPERRE)<br>MAGNETIC LOCK (KEY LOCK) | SIN020<br>SIN021<br>SIN121 | 1 |

| AFBEELDING<br>IMAGE<br>BILD<br>PICTURE | OMSCHRIJVING<br>DESCRIPTION<br>BESCHREIBUNG<br>DESCRIPTION | TOEPASSING<br>APLPLICANTION<br>ANWENDUNG<br>APPLICATION | VERP.PER<br>EMB.PAR<br>PACK PR.<br>PACK PR. |
|---|---|---|---|
| 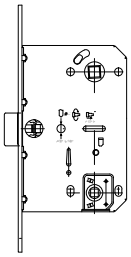 | **ACSIN300WC**<br><br>MAGNETISCH SLOT (BADKAMER VERGRENDEL-ING)<br>SERRURE MAGNETIQUE (SERRURE DE SALLE DE BAIN)<br>MAGNETVERSCHLUSS (BADEZIMMERSCHLOSS)<br>MAGNETIC LOCK (BATHROOM LOCK) | SIN020<br>SIN021<br>SIN121 | 1 |
| 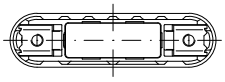 <br> 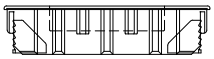 | **ACSIN310**<br><br>SLUITPLAAT VOOR MAGNETISCH SLOT<br>GACHE-CUVETTE POUR SERRURE MAGNETIQUE<br>SCHLIESSPLATTE FUR MAGNETVERSCHLUSS<br>STRIKER FOR MAGNETIC LOCK | SIN020<br>SIN021 | 1 |
| 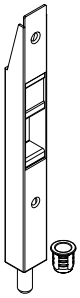 | **ACSIN330**<br><br>GRENDEL<br>VERROU<br>RIEGEL<br>BOLT | SIN021<br>ACSIN340 | 1 |
| 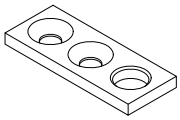 | **ACSIN331**<br><br>SLUITSTUK<br>GACHE<br>SCHLIESSPLATTE<br>KEEPER | ACSIN330 | 10 |
| 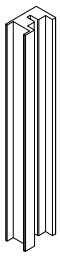 | **ACSIN340**<br><br>TEGENSTUK GRENDEL<br>CONTRE-PIECE VERROU<br>RIEGEL GEGENSTUCK<br>BOLT COUNTERPIECE | ACSIN330 | 2 |

| AFBEELDING<br>IMAGE<br>BILD<br>PICTURE | OMSCHRIJVING<br>DESCRIPTION<br>BESCHREIBUNG<br>DESCRIPTION | TOEPASSING<br>APLPLICANTION<br>ANWENDUNG<br>APPLICATION | VERP.PER<br>EMB.PAR<br>PACK PR.<br>PACK PR. |
|---|---|---|---|
| 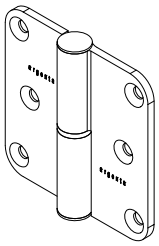 | **ACSIN400L**<br>SCHARNIER<br>PAUMELLE<br>SCHARNIER<br>HINGE | SIN020<br>SIN021 | 1 |
| 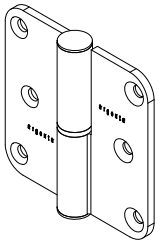 | **ACSIN400R**<br>SCHARNIER<br>PAUMELLE<br>SCHARNIER<br>HINGE | SIN020<br>SIN021 | 1 |
| 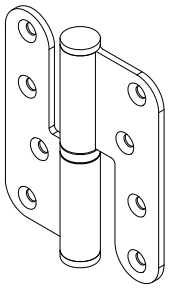 | **ACSIN401L**<br>SCHARNIER<br>PAUMELLE<br>SCHARNIER<br>HINGE | SIN420<br>SIN421 | 1 |
| 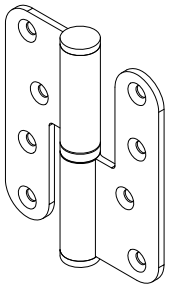 | **ACSIN401R**<br>SCHARNIER<br>PAUMELLE<br>SCHARNIER<br>HINGE | SIN420<br>SIN421 | 1 |
| 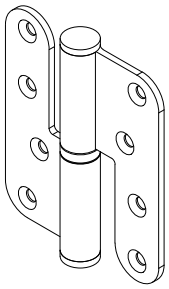 | **ACSIN402L**<br>REGELBAAR SCHARNIER<br>PAUMELLEREGLABLE<br>VERSTELLBARES SCHARNIER<br>ADJUSTABLE HINGE | SIN420<br>SIN421 | 1 |

| AFBEELDING<br>IMAGE<br>BILD<br>PICTURE | OMSCHRIJVING<br>DESCRIPTION<br>BESCHREIBUNG<br>DESCRIPTION | TOEPASSING<br>APLPLICANTION<br>ANWENDUNG<br>APPLICATION | VERP.PER<br>EMB.PAR<br>PACK PR.<br>PACK PR. |
|---|---|---|---|
| 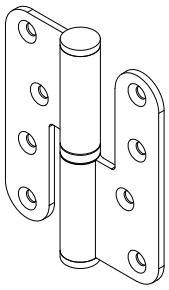 | **ACSIN402R**<br><br>REGELBAAR SCHARNIER<br>PAUMELLEREGLABLE<br>VERSTELLBARES SCHARNIER<br>ADJUSTABLE HINGE | SIN420<br>SIN421 | 1 |
| 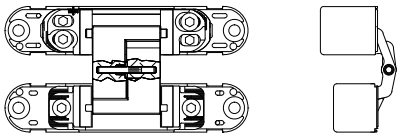 | **ACSIN430**<br><br>VERDOKEN SCHARNIER<br>PAUMELLE CACHE<br>VERDECKTES BAND<br>CONCEALED HINGE<br><br>MAX 60 KG | SIN020<br>SIN021<br>SIN320 | 1 |
| 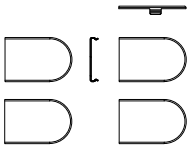 | **ACSIN431**<br><br>AFDEKKIT VOOR VERDOKEN SCHARNIER<br>KIT DE COUVERTURE POUR PAUMELLE CACHE<br>ABDECKUNGSSATZ FUR VERDECKTES BAND<br>COVER KIT FOR CONCEALED HINGE | ACSIN430 | 1 |
| 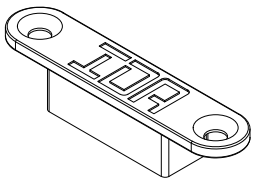 | **ACSIN450**<br><br>MAGNEETSLUITING<br>FERMETURE MAGNETIQUE<br>MAGNETVERSCHLUSS<br>MAGNET CLOSER | SIN020<br>SIN021<br>SIN420<br>SIN421 | 10 |
| 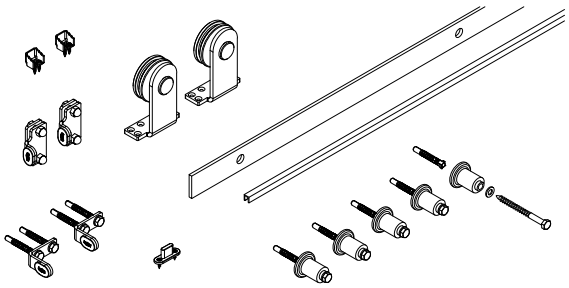 | **ACSIN510**<br><br>SCHUIFDEURBESLAG (LOFT)<br>SYSTEME PORTES COULISSANTES (LOFT)<br>SHIEBETURBESCHLAG (LOFT)<br>SLIDING DOOR SYSTEM (LOFT)<br><br>L = 2000 MM | | 1 |

| AFBEELDING<br>IMAGE<br>BILD<br>PICTURE | OMSCHRIJVING<br>DESCRIPTION<br>BESCHREIBUNG<br>DESCRIPTION | TOEPASSING<br>APLPLICANTION<br>ANWENDUNG<br>APPLICATION | VERP.PER<br>EMB.PAR<br>PACK PR.<br>PACK PR. |
|---|---|---|---|
| 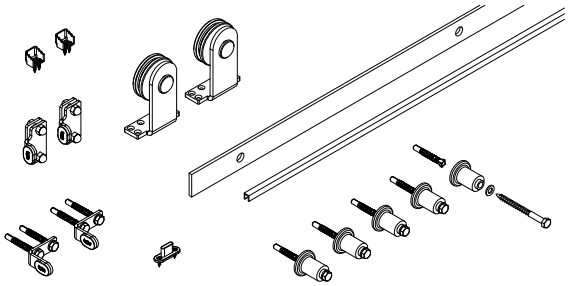 | **ACSIN511**<br>SCHUIFDEURBESLAG (LOFT)<br>SYSTEME PORTES COULISSANTES (LOFT)<br>SHIEBETURBESCHLAG (LOFT)<br>SLIDING DOOR SYSTEM (LOFT)<br><br>L = 2500 MM<br>● | | 1 |
| 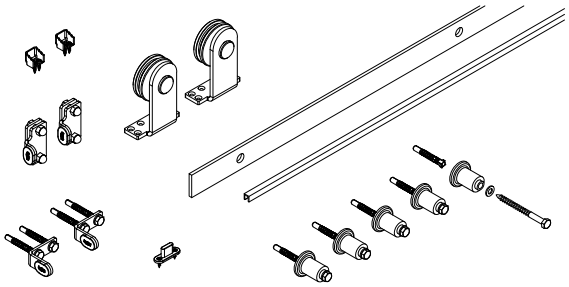 | **ACSIN512**<br>SCHUIFDEURBESLAG (LOFT)<br>SYSTEME PORTES COULISSANTES (LOFT)<br>SHIEBETURBESCHLAG (LOFT)<br>SLIDING DOOR SYSTEM (LOFT)<br><br>L = 3000 MM<br>● | | 1 |
| 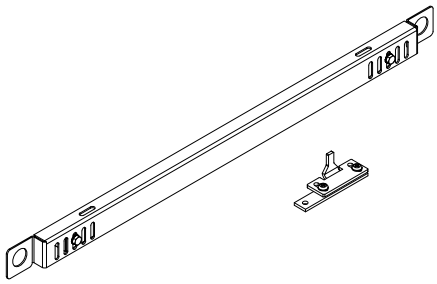 | **ACSIN515**<br>SOFT-CLOSER (LOFT)<br>SOFT-CLOSER (LOFT)<br>SOFT-CLOSER (LOFT)<br>SOFT-CLOSER (LOFT)<br>● | | 1 |
| 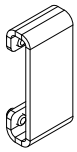 | **ACSIN520**<br>VERBINDINGSSTUK (LOFT)<br>PIECE DE RACCORDEMENT (LOFT)<br>VERBINDUNGSSTUECK (LOFT)<br>CONNECTION PIECE (LOFT)<br>● | | 1 |
| 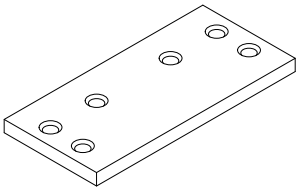 | **ACSIN521**<br>ONDERVULLING (LOFT)<br>SUPPORT (LOFT)<br>FUELLSTUECK (LOFT)<br>COVER SUPPORT (LOFT) | ACSIN510<br>ACSIN511<br>ACSIN512 | 2 |

| AFBEELDING<br>IMAGE<br>BILD<br>PICTURE | OMSCHRIJVING<br>DESCRIPTION<br>BESCHREIBUNG<br>DESCRIPTION | TOEPASSING<br>APLPLICANTION<br>ANWENDUNG<br>APPLICATION | VERP.PER<br>EMB.PAR<br>PACK PR.<br>PACK PR. |
|---|---|---|---|
| 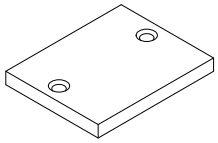 | **ACSIN522**<br><br>ONDERVULLING (LOFT)<br>SUPPORT (LOFT)<br>FUELLSTUECK (LOFT)<br>COVER SUPPORT (LOFT) | ACSIN515 | 1 |
| 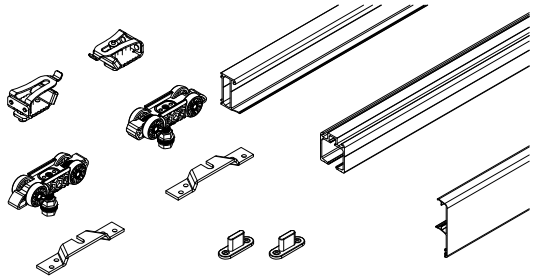 | **ACSIN551**<br><br>SCHUIFDEURBESLAG (MODERN)<br>SYSTEME PORTES COULISSANTES (MODERN)<br>SHIEBETURBESCHLAG (MODERN)<br>SLIDING DOOR SYSTEM (MODERN)<br><br>L = 2500 MM | | 1 |
| 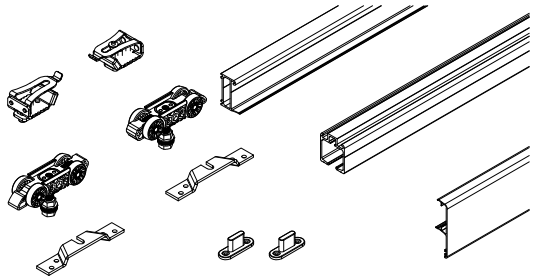 | **ACSIN552**<br><br>SCHUIFDEURBESLAG (MODERN)<br>SYSTEME PORTES COULISSANTES (MODERN)<br>SHIEBETURBESCHLAG (MODERN)<br>SLIDING DOOR SYSTEM (MODERN)<br><br>L = 3000 MM | | 1 |
| 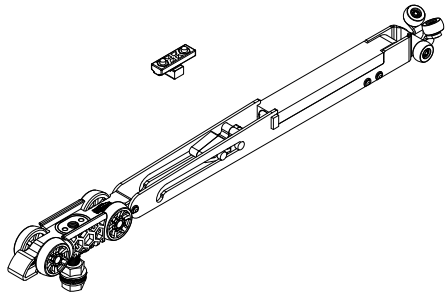 | **ACSIN556**<br><br>SOFT-CLOSER (MODERN)<br>SOFT-CLOSER (MODERN)<br>SOFT-CLOSER (MODERN)<br>SOFT-CLOSER (MODERN)<br><br><60 KG | | 1 |
| 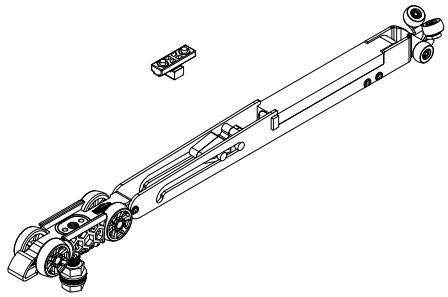 | **ACSIN557**<br><br>SOFT-CLOSER (MODERN)<br>SOFT-CLOSER (MODERN)<br>SOFT-CLOSER (MODERN)<br>SOFT-CLOSER (MODERN)<br><br><100 KG | | 1 |

| AFBEELDING<br>IMAGE<br>BILD<br>PICTURE | OMSCHRIJVING<br>DESCRIPTION<br>BESCHREIBUNG<br>DESCRIPTION | TOEPASSING<br>APLPLICANTION<br>ANWENDUNG<br>APPLICATION | VERP.PER<br>EMB.PAR<br>PACK PR.<br>PACK PR. |
|---|---|---|---|
| 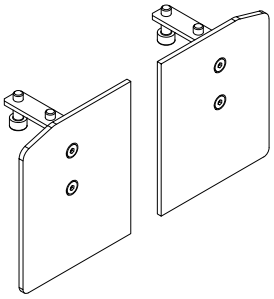 | **ACSIN560**<br>AFDEKPLAAT (MODERN)<br>TOLE DE RECOUVREMENT (MODERN)<br>ABDECKPLATTE (MODERN)<br>COVER PLATE (MODERN) | | 1 |
| 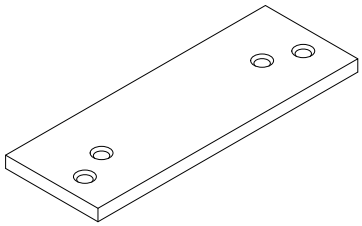 | **ACSIN561**<br>ONDERVULLING (MODERN)<br>SUPPORT (MODERN)<br>FUELLSTUECK (MODERN)<br>COVER SUPPORT (MODERN) | ACSIN551<br>ACSIN552 | 2 |
| 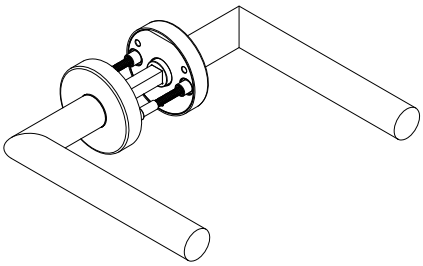 | **ACSIN600**<br>DEURKRUK HOEK 90°<br>POIGNEE DE PORTE ANGLE 90°<br>TURGRIFF WINKEL 90°<br>DOOR HANDLE ANGLE 90° | | 1 |
| 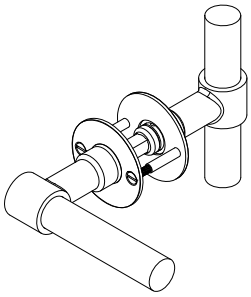 | **ACSIN610**<br>DEURKRUK L/T-MODEL<br>POIGNEE DE PORTE L/T-MODELE<br>TURGRIFF L/T-MODELL<br>DOOR HANDLE L/T-MODEL | | 1 |

| AFBEELDING<br>IMAGE<br>BILD<br>PICTURE | OMSCHRIJVING<br>DESCRIPTION<br>BESCHREIBUNG<br>DESCRIPTION | TOEPASSING<br>APLPLICANTION<br>ANWENDUNG<br>APPLICATION | VERP.PER<br>EMB.PAR<br>PACK PR.<br>PACK PR. |
|---|---|---|---|
| 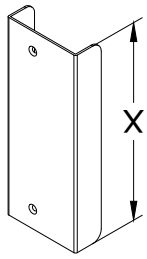 | **ACSIN620-X**<br><br>HANDGREEP<br>POIGNEE<br>GRIFF<br>HANDLE<br><br>ACSIN620-100: X = 100MM<br>ACSIN620-200: X = 200MM<br>ACSIN620-300: X = 300MM<br>ACSIN620-400: X = 400MM<br>ACSIN620-500: X = 500MM | | 1 |
| | **ACSIN630-X**<br><br>HANDGREEP<br>POIGNEE<br>GRIFF<br>HANDLE<br><br>ACSIN630-250: X = 250MM<br>ACSIN630-400: X = 400MM<br>ACSIN630-500: X = 500MM<br><br>ZIE, VOIRE, SIEHE, SEE P. 37 | | 1 |
| 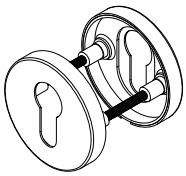 | **ACSIN650CY**<br><br>ROZET (CILINDERSLOT)<br>ROSETTE (SERRURE A CYLINDER)<br>ROSETTE (ZYLINDERSCHLOSS)<br>ROSETTE (CYLINDER LOCK) | | 1 |
| 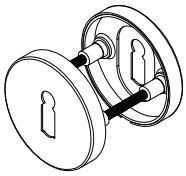 | **ACSIN650KE**<br><br>ROZET (SLEUTELSLOT)<br>ROSETTE (SERRURE A CLE)<br>ROSETTE (TASTENSPERRE)<br>ROSETTE (KEY LOCK) | | 1 |

| AFBEELDING<br>IMAGE<br>BILD<br>PICTURE | OMSCHRIJVING<br>DESCRIPTION<br>BESCHREIBUNG<br>DESCRIPTION | TOEPASSING<br>APLPLICANTION<br>ANWENDUNG<br>APPLICATION | VERP.PER<br>EMB.PAR<br>PACK PR.<br>PACK PR. |
|---|---|---|---|
| 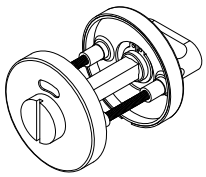 | **ACSIN650WC**<br><br>ROZET (BADKAMER VERGRENDELING)<br>ROSETTE (SERRURE DE SALLE DE BAIN)<br>ROSETTE (BADEZIMMERSCHLOSS)<br>ROSETTE (BATHROOM LOCK)<br> | | 1 |
| 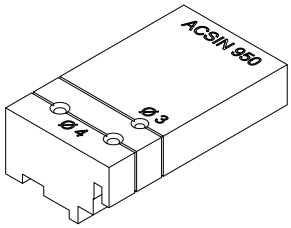 | **ACSIN950**<br><br>BOORMAL T-VERBINDING<br>GABARIT RACCORDEMENT-T<br>BOHRLEHRE T-VERBINDUNG<br>BORING JIG T-CONNECTION | SIN020<br>SIN021<br>SIN030<br>SIN050<br>... | 1 |
| 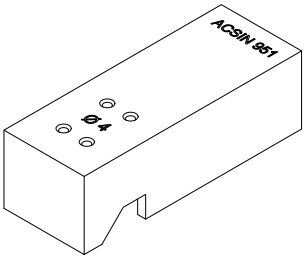 | **ACSIN951**<br><br>BOORMAL HOEKVERBINDING<br>GABARIT RACCORDEMENT EQUERRE<br>BOHRLEHRE ECKVERBINDUNG<br>BORING JIG CORNERCONNECTION | SIN020<br>SIN021<br>SIN030 | 1 |
| 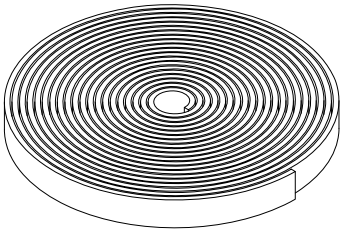 | **ACMX09814**<br><br>DUBBELZIJDIGE TAPE<br>RUBAN ADHESIF DES DEUX COTES<br>DOPPELSEITIGES KLEBEBAND<br>DOUBLE-SIDED ADHESIVE TAPE<br><br>D = 2.0 MM | SIN020<br>SIN021<br>SIN030<br>SIN050<br>... | 30M |
| 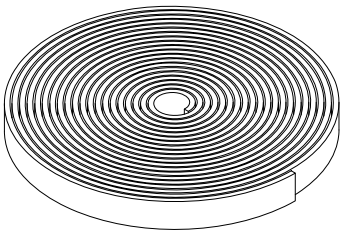 | **ACMX09815**<br><br>DUBBELZIJDIGE TAPE (KLEINHOUT)<br>RUBAN ADHESIF DES DEUX COTES (PETIT BOIS)<br>DOPPELSEITIGES KLEBEBAND (ZIERSPROSSE)<br>DOUBLE-SIDED ADHESIVE TAPE (ORNAMENTAL BAR)<br><br>D = 1.6 MM | SIN035 | 50M |

| AFBEELDING<br>IMAGE<br>BILD<br>PICTURE | OMSCHRIJVING<br>DESCRIPTION<br>BESCHREIBUNG<br>DESCRIPTION | TOEPASSING<br>APLPLICANTION<br>ANWENDUNG<br>APPLICATION | VERP.PER<br>EMB.PAR<br>PACK PR.<br>PACK PR. |
|---|---|---|---|
| 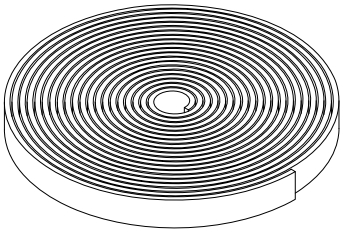 | **ACMX09816**<br>ENKELZIJDIGE SCHUIM TAPE<br>MOUSSE RUBAN ADHESIF A UNE FACE<br>EINSEITIGES SCHAUM-KLEBEBAND<br>SINGLE-SIDED ADHESIVE FOAM TAPE<br>D = 2.0 MM | SIN050<br>SIN150 | 20M |
| | **ACMX830**<br>DIN7982 3.9x50 - TORX | | 500 |
| | **ACMX830Z**<br>DIN7982 3.9x50 - TORX<br>ZWART - NOIR - SCHWARZ - BLACK | | 500 |
| | **ACMX831**<br>DIN7981 3.9x22 - TORX | | 100 |
| | **ACMX832**<br>DIN7981 3.9x32 - TORX | | 100 |

| AFBEELDING<br>IMAGE<br>BILD<br>PICTURE | OMSCHRIJVING<br>DESCRIPTION<br>BESCHREIBUNG<br>DESCRIPTION | TOEPASSING<br>APLPLICANTION<br>ANWENDUNG<br>APPLICATION | VERP.PER<br>EMB.PAR<br>PACK PR.<br>PACK PR. |
|---|---|---|---|
| | **ACMX833**<br>DIN7982 3.9x16 - TORX | | 100 |
| 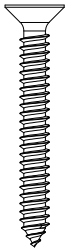 | **ACMX834**<br>DIN7982 3.9x32 - TORX | | 100 |
| | **ACMX834Z**<br>DIN7982 3.9x32 - TORX<br>ZWART - NOIR - SCHWARZ - BLACK | | 1000 |
| | **ACMX835**<br>DIN7982 4.8x25 - TORX | | 100 |
| | **ACMX836**<br>DIN7982 4.8x32 - TORX | | 100 |

| AFBEELDING<br>IMAGE<br>BILD<br>PICTURE | OMSCHRIJVING<br>DESCRIPTION<br>BESCHREIBUNG<br>DESCRIPTION | TOEPASSING<br>APLPLICANTION<br>ANWENDUNG<br>APPLICATION | VERP.PER<br>EMB.PAR<br>PACK PR.<br>PACK PR. |
|---|---|---|---|
| | **ACMX837**<br>DIN7982 3.9x19 - TORX | | 100 |
| | **ACMX837Z**<br>DIN7982 3.9x19 - TORX<br>ZWART - NOIR - SCHWARZ - BLACK | | 1000 |
| | **ACMX838**<br>ISO 14581 M5X6 - TORX | | 500 |
| | **ACMX838Z**<br>ISO 14581 M5X6 - TORX<br>ZWART - NOIR - SCHWARZ - BLACK | | 500 |
| | **ACMX839**<br>DIN7982 3.9x25 - TORX | | 100 |

| AFBEELDING<br>IMAGE<br>BILD<br>PICTURE | OMSCHRIJVING<br>DESCRIPTION<br>BESCHREIBUNG<br>DESCRIPTION | TOEPASSING<br>APLPLICANTION<br>ANWENDUNG<br>APPLICATION | VERP.PER<br>EMB.PAR<br>PACK PR.<br>PACK PR. |
|---|---|---|---|
| | **ACMX875**<br>DIN7982 2.9x16 | | 200 |
| 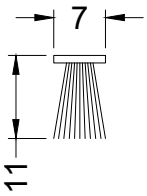 | **ACSR011**<br>BORSTELDICHTING<br>JOINT-BROSSE<br>BUERSTENDICHTUNG<br>WOOLPILE | VS532 | 100M |
| 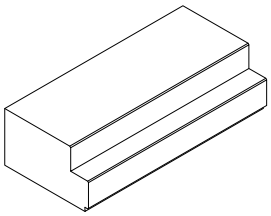 | **ACUN940**<br>KLEMBLOK<br>SERRE BLOC<br>KLAMMERN BLOCK<br>CLAMP BLOCK | | 1 |

# ACSIN630

BESTELFORMULIER
BORDEREAU DE COMMANDE
AUFTRAG FORMULAR
ORDER DOCUMENT

| | | |
|---|---|---|
| DATUM: _____ | KLANT / CLIENT / KUNDE / CUSTOMER: _____ | P.O.: _____ |
| | | ORDERNR.: _____ |
| REF.: _____ | KLEUR / COULEUR / FARBE / COLOUR: _____ | LEVERANCIER.: _____ |
| | | DATUM LEV.: _____ |

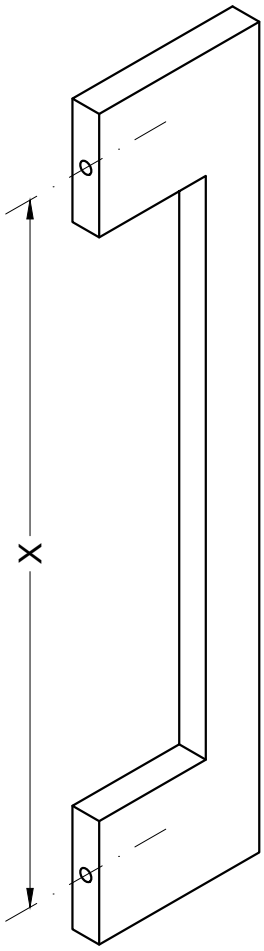


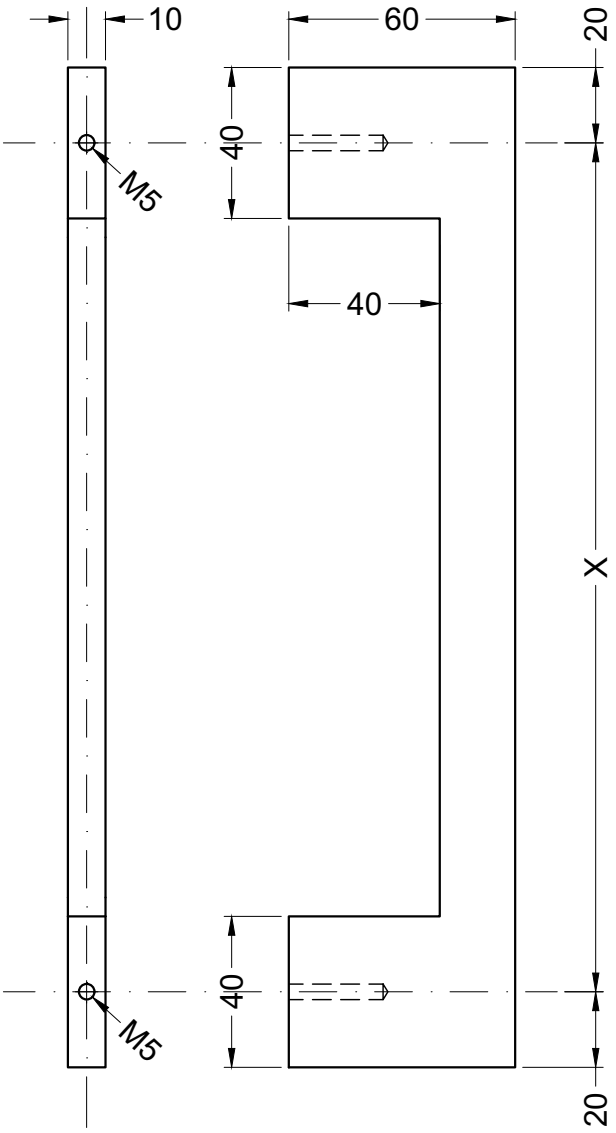


| | |
|---|---|
| X: _____ MM | NUMBER<br>ANZALH<br>NOMBRE<br>AANTAL |

ACSIN630_O

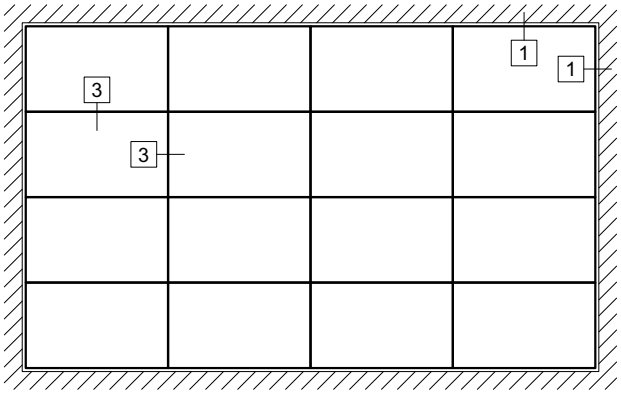


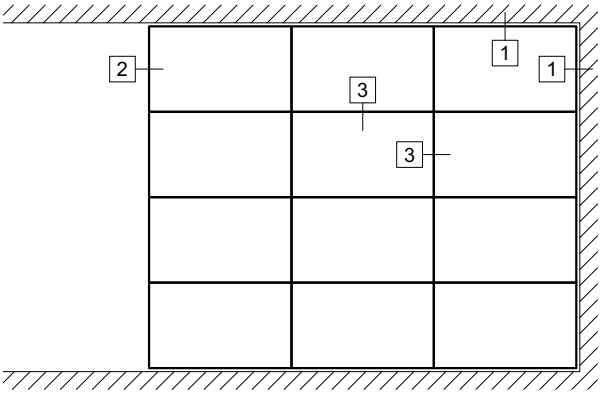


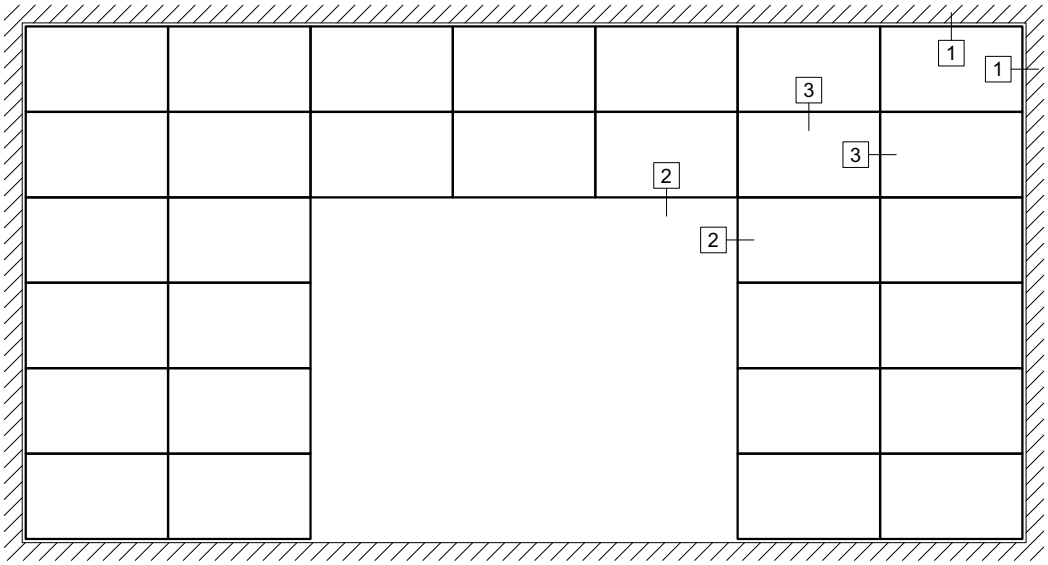


TYPE001

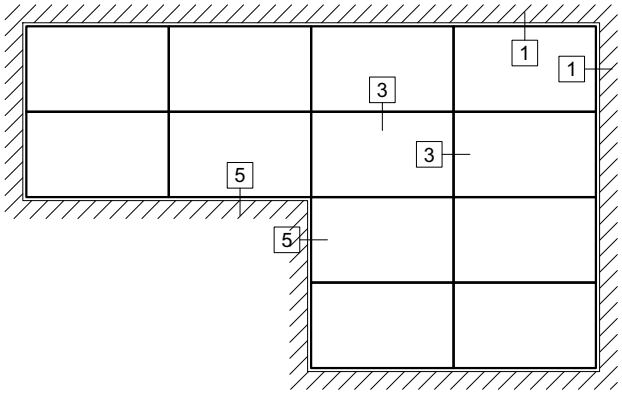


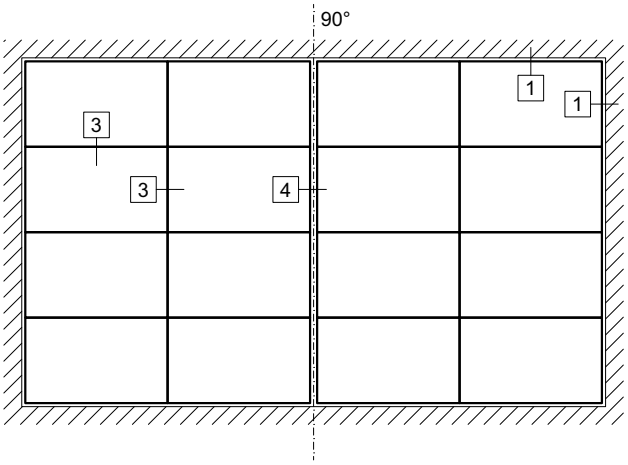


TYPE002

1

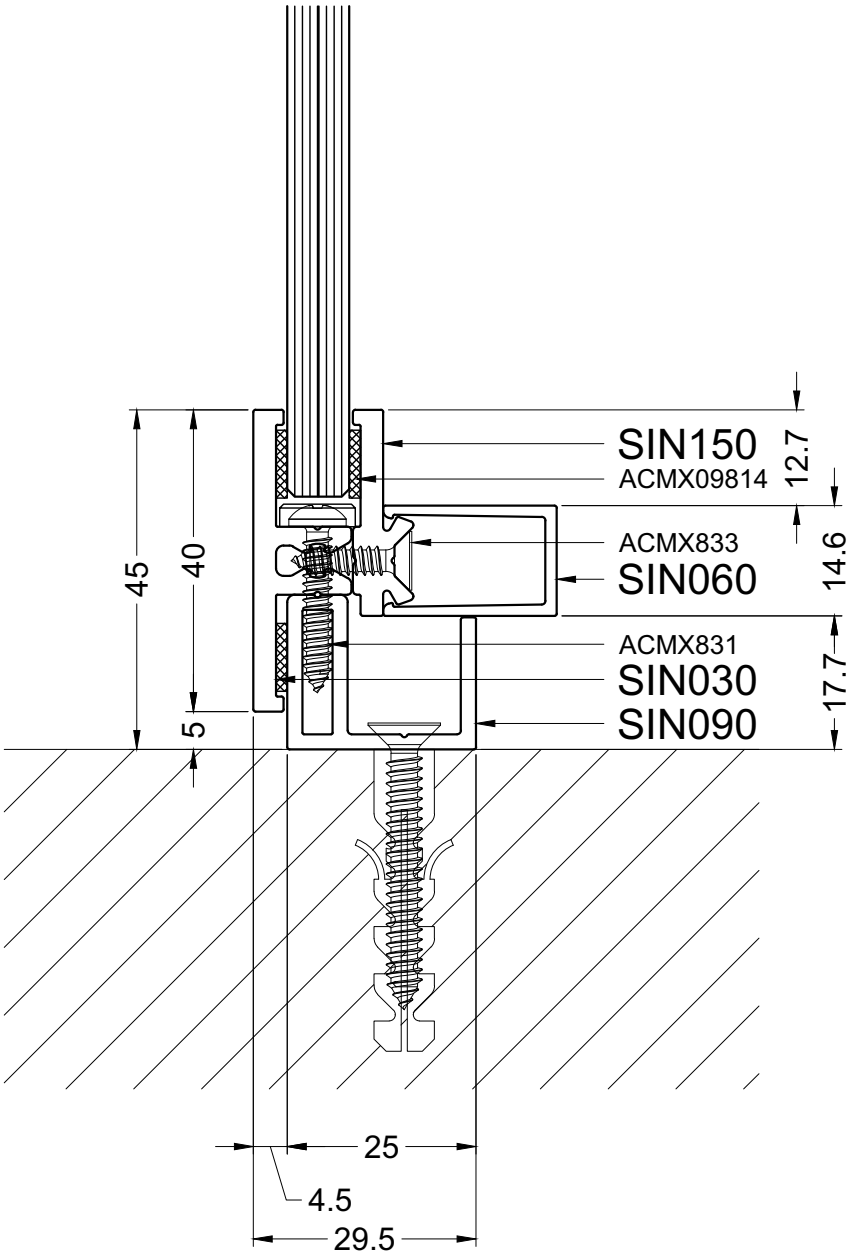


1-SIN090-SIN030(SIN060)

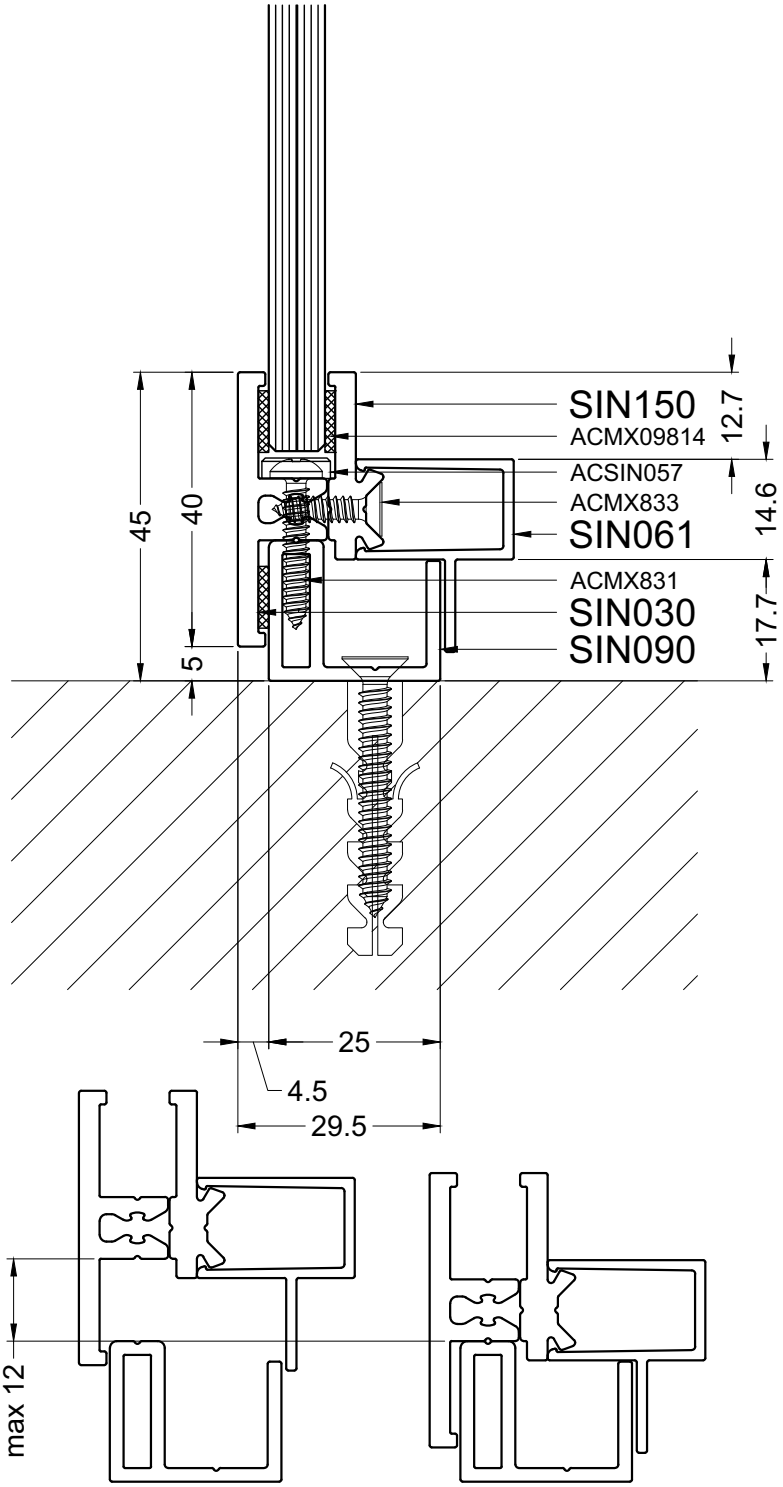


0 1 2 3 4 5 6 7 8 9 10 cm

1-SIN090-SIN030(SIN061)

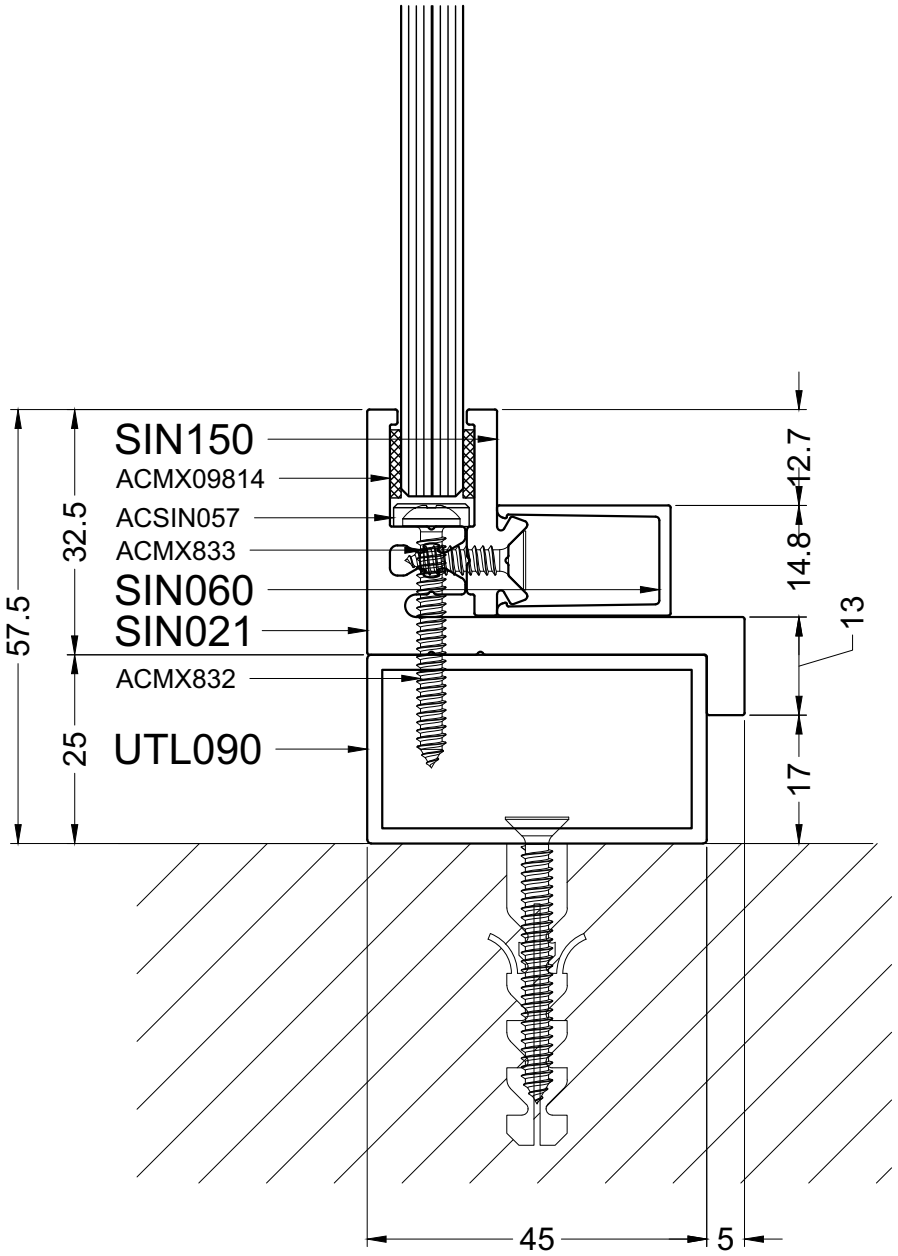


1-UTL2-SIN021

# 1

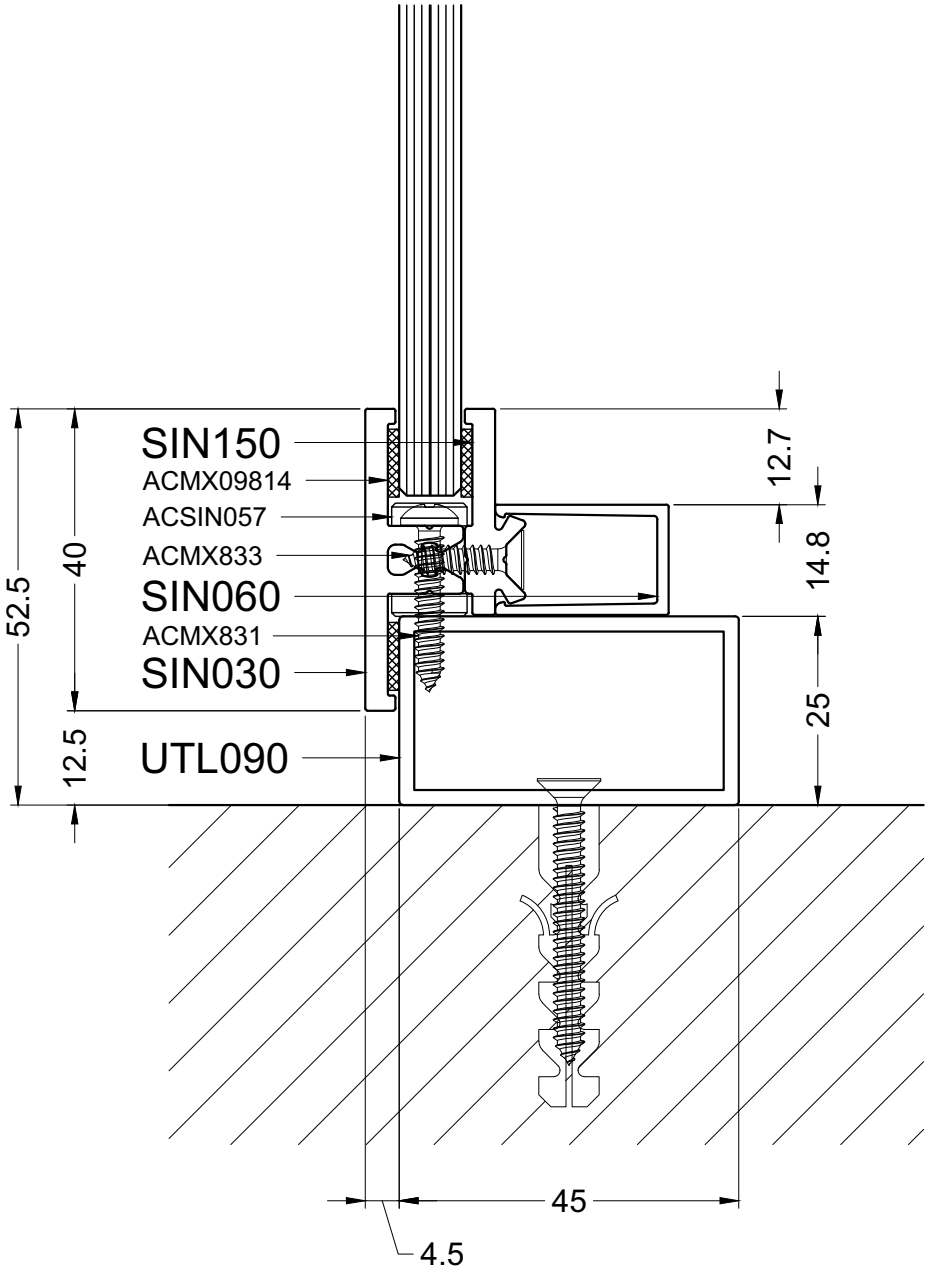


1-UTL2-SIN030



aliplast
member of
CORIALIS

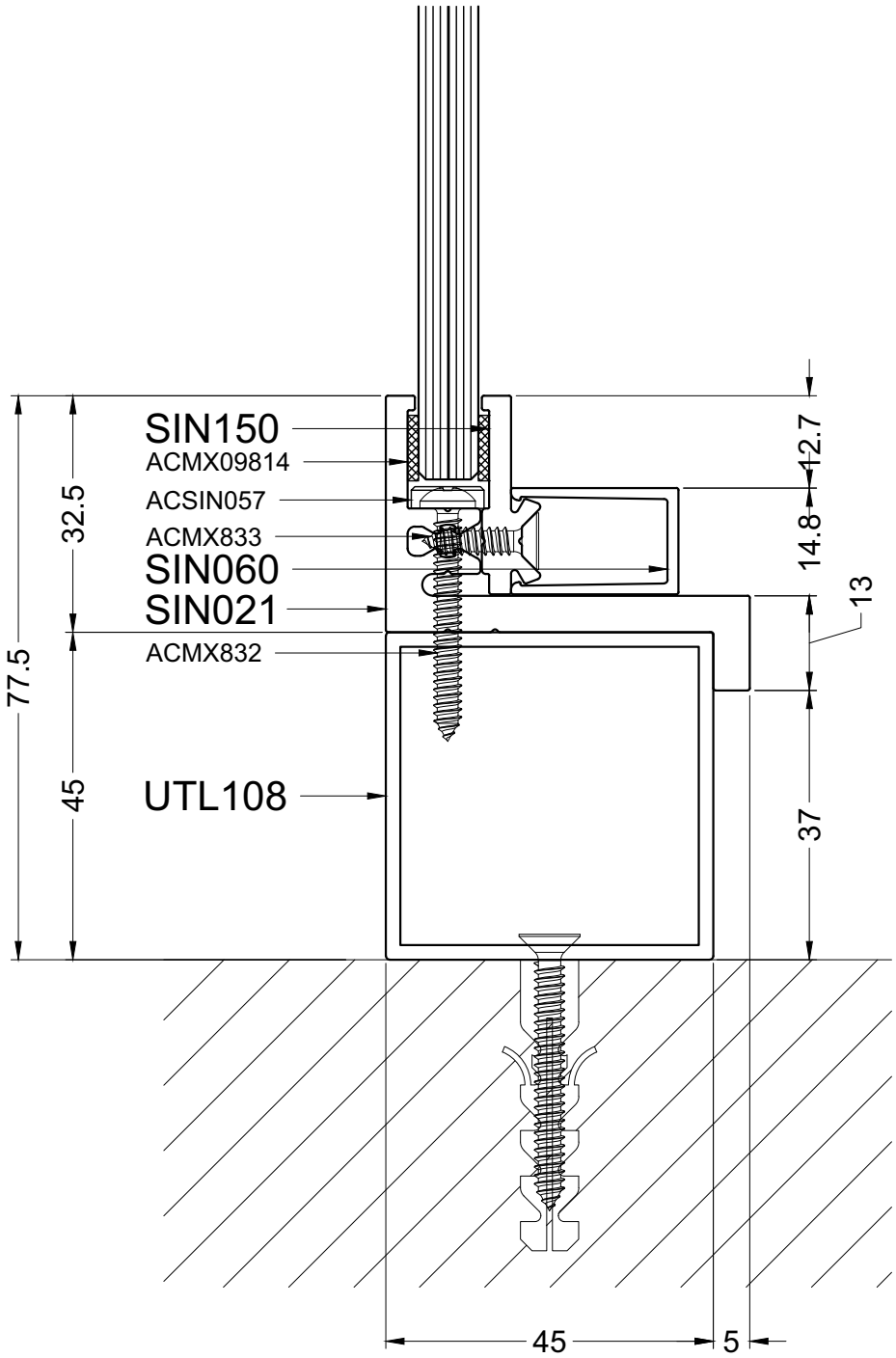
SIN150
ACMX09814
ACSIN057
ACMX833
SIN060
SIN021
ACMX832
UTL108
77.5
32.5
45
12.7
14.8
13
37
45
5

1-UTL-SIN021

# 1

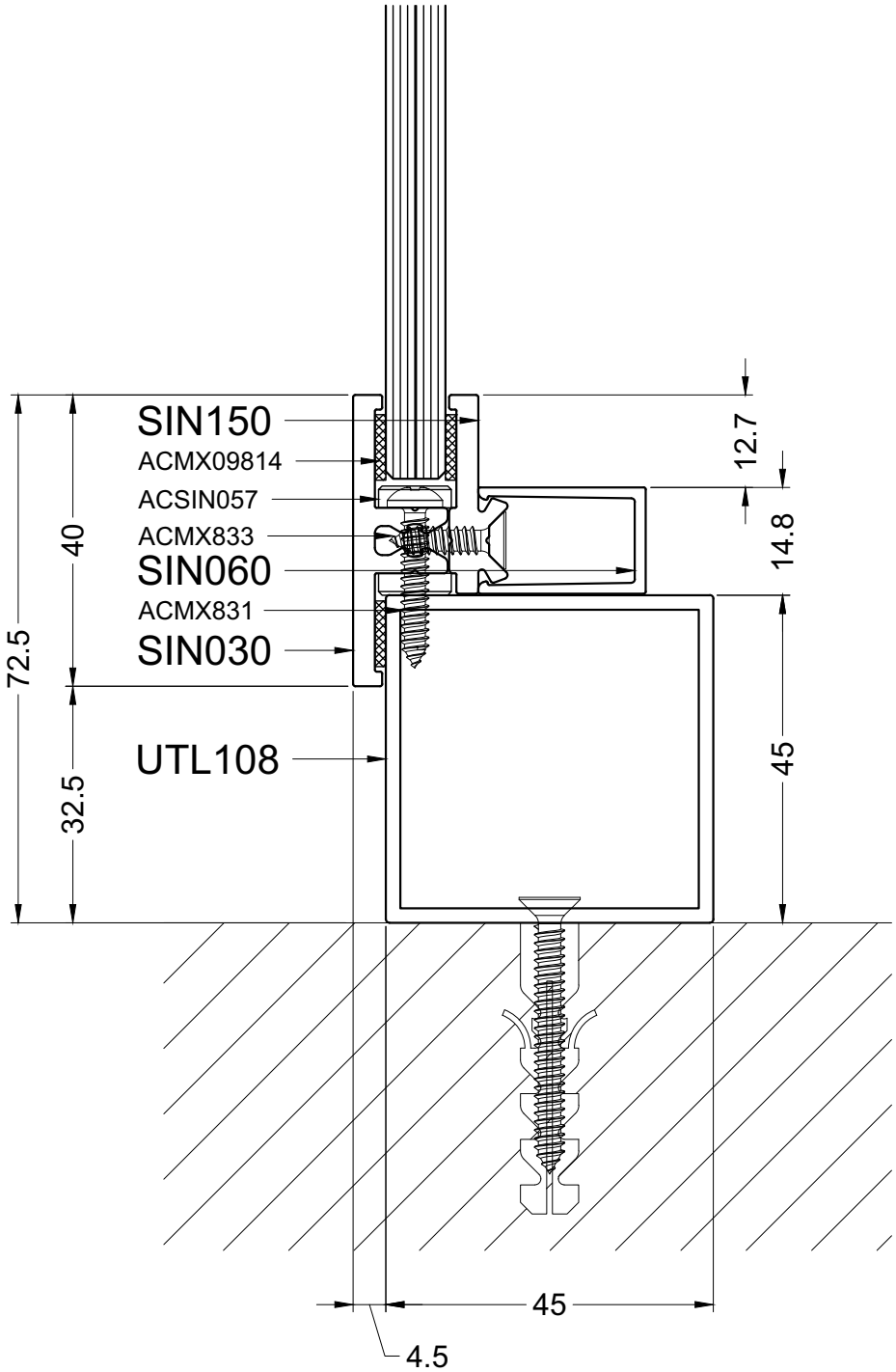


1-UTL-SIN030



aliplast
member of
CORIALIS

1

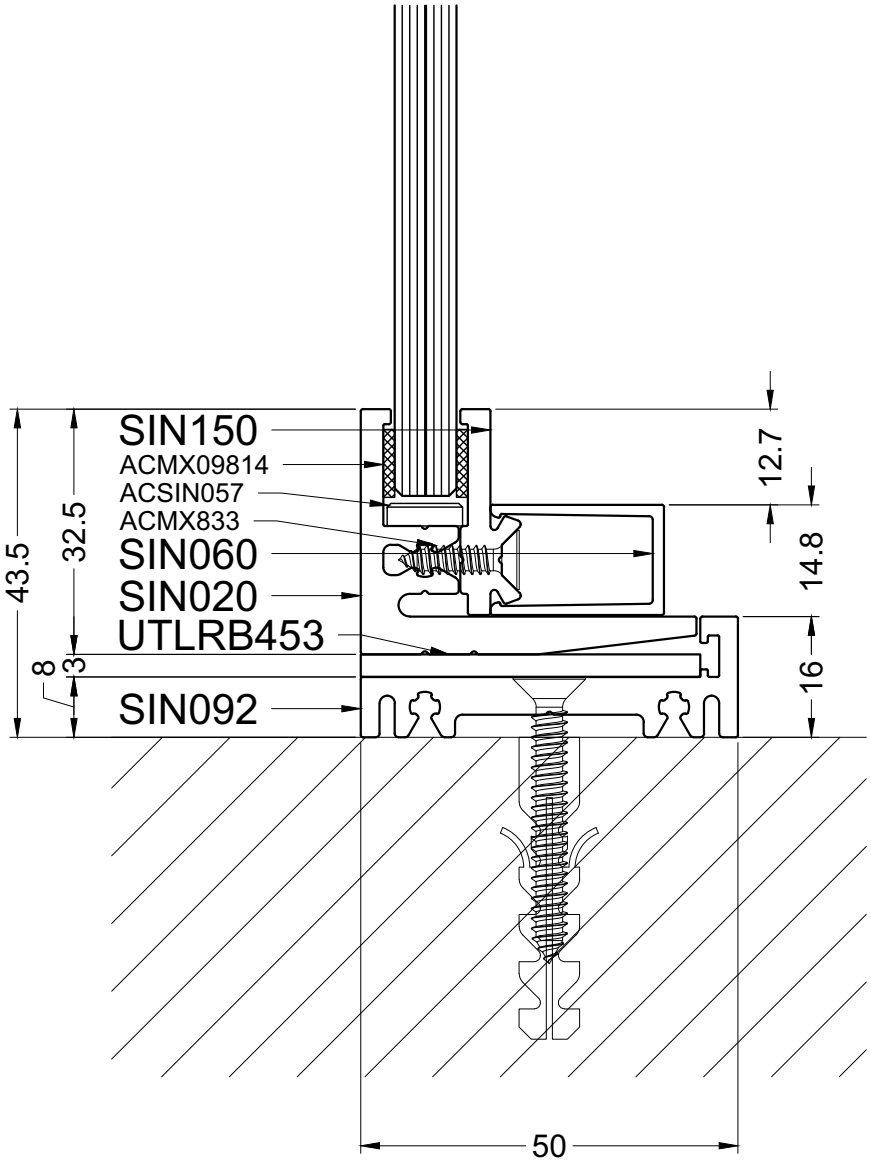




1-SIN092-SIN020

# 1

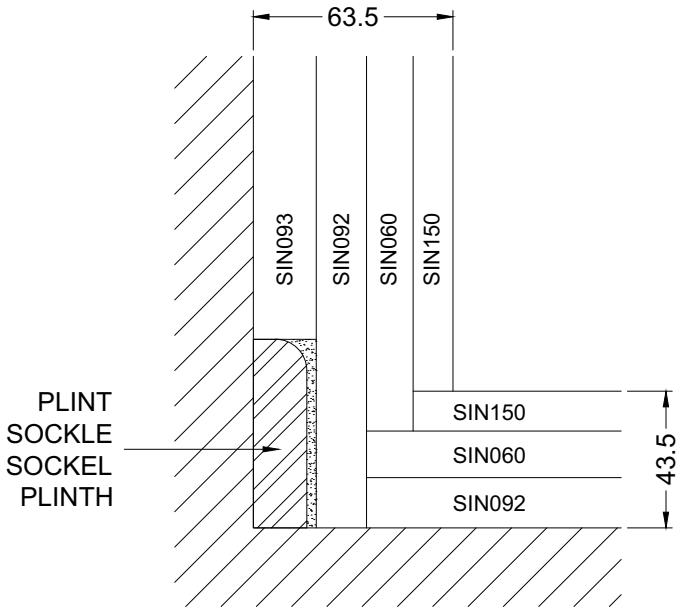


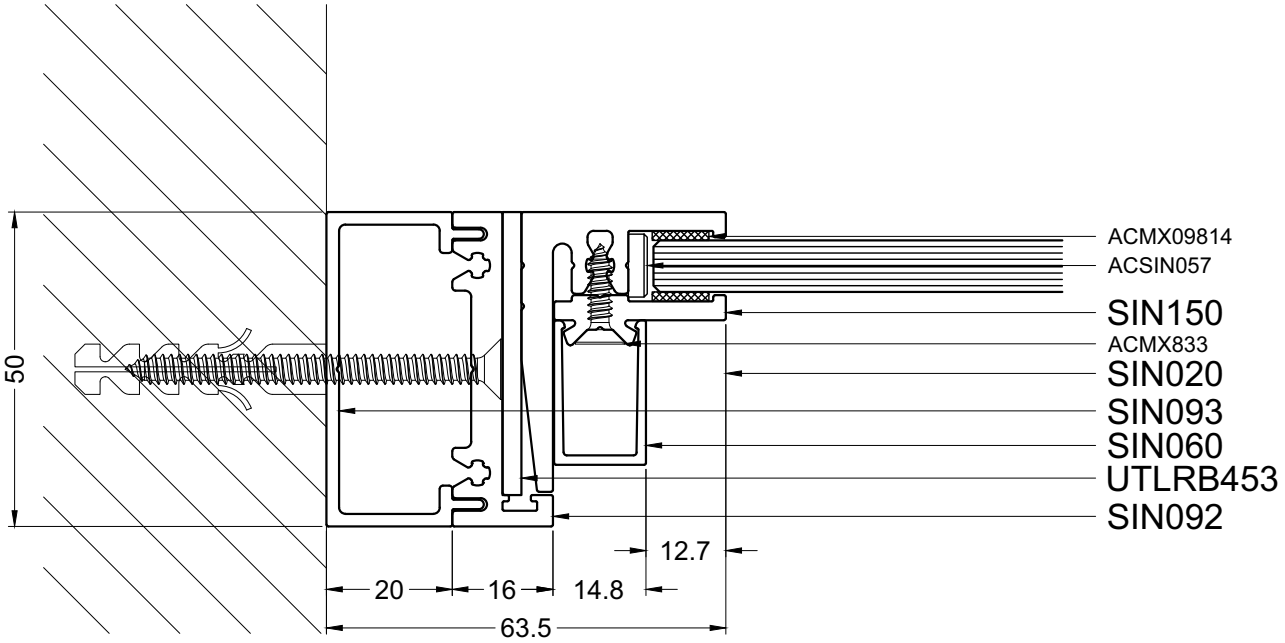

1-(SIN093)SIN092-SIN020



aliplast
member of
CORIALIS

2

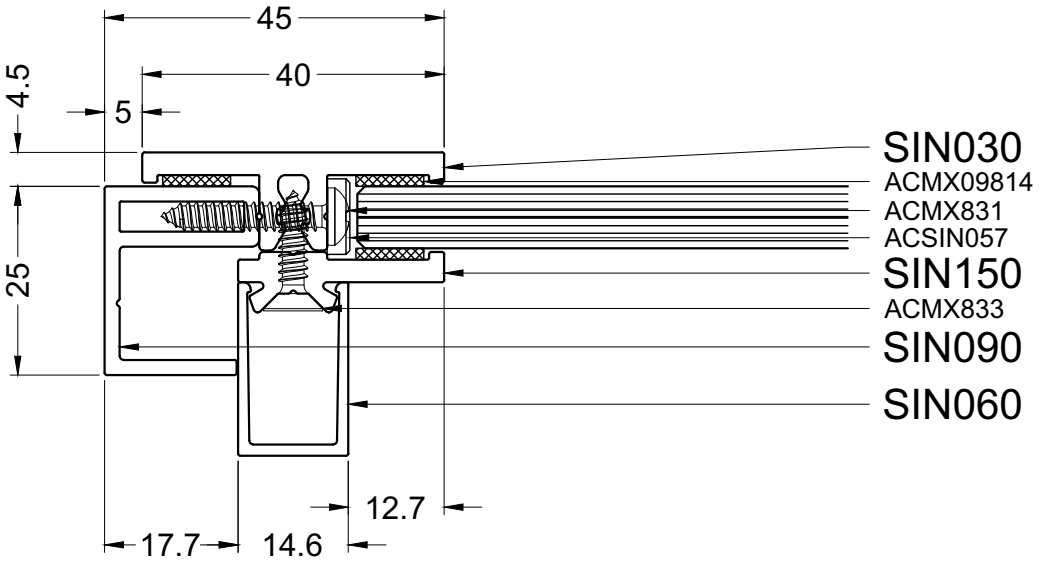
45
40
4.5
5
25
SIN030
ACMX09814
ACMX831
ACSIN057
SIN150
ACMX833
SIN090
SIN060
12.7
17.7
14.6

# 2

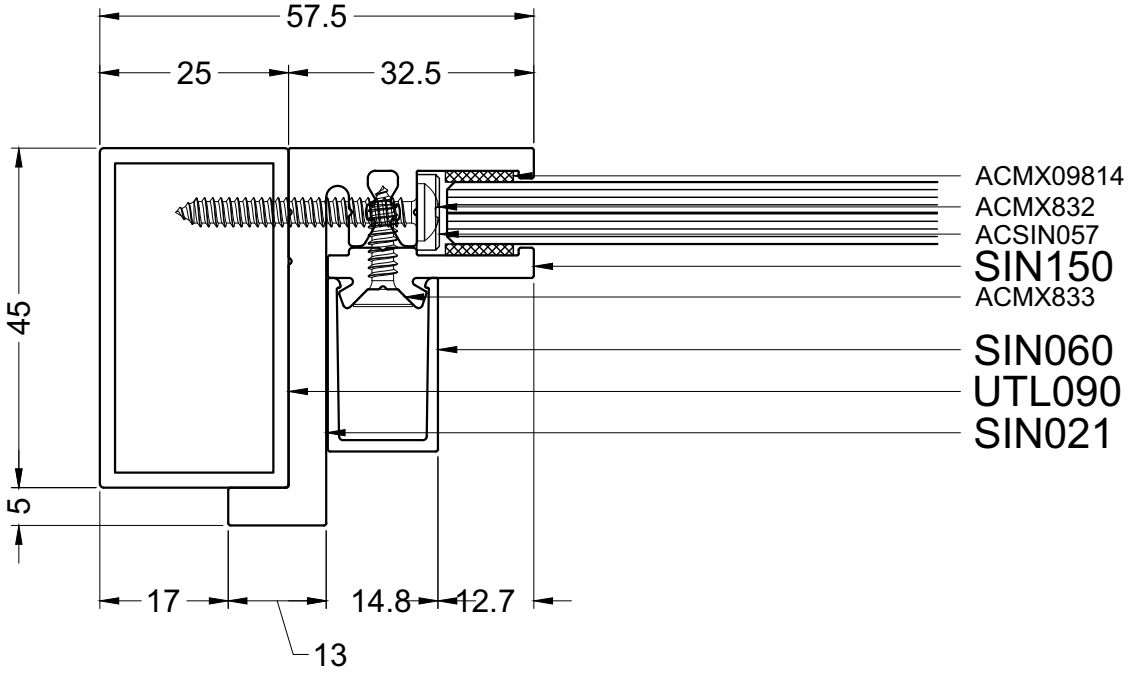


2-UTL2-SIN021



aliplast
member of
CORIALIS

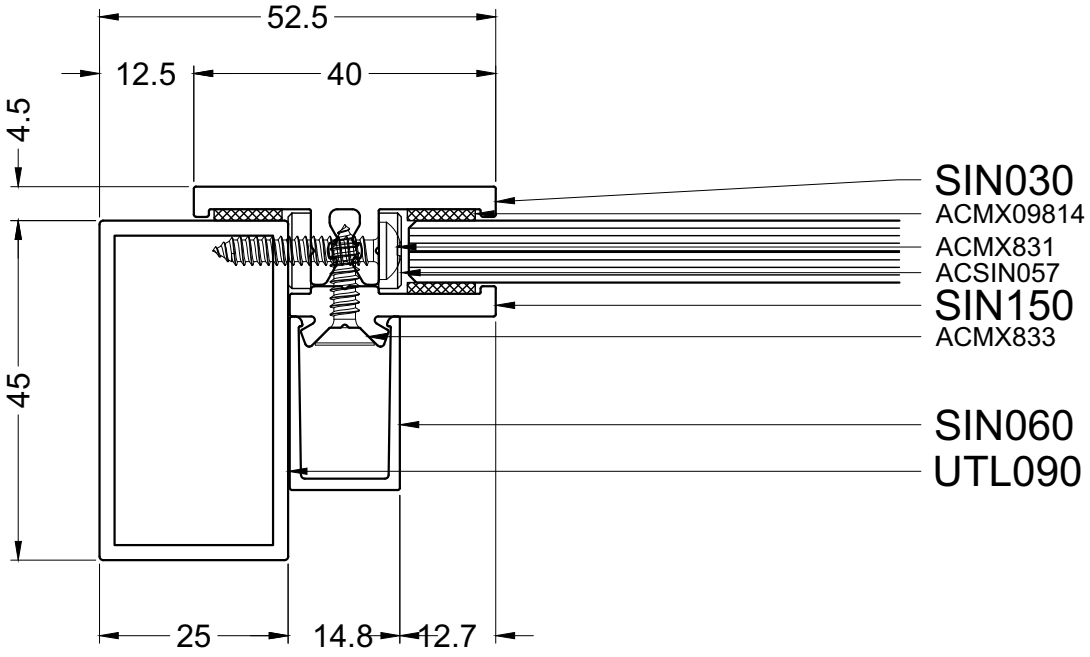


2-UTL2-SIN030

## 2

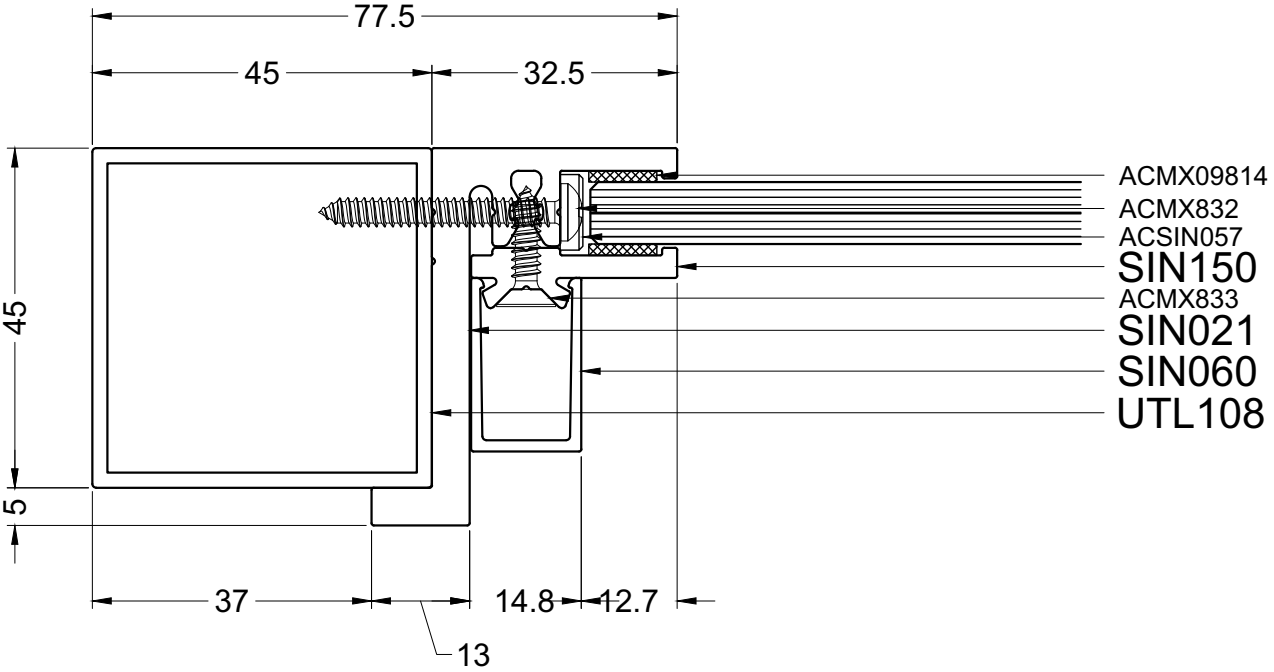


2-UTL-SIN021



aliplast
member of
CORIALIS

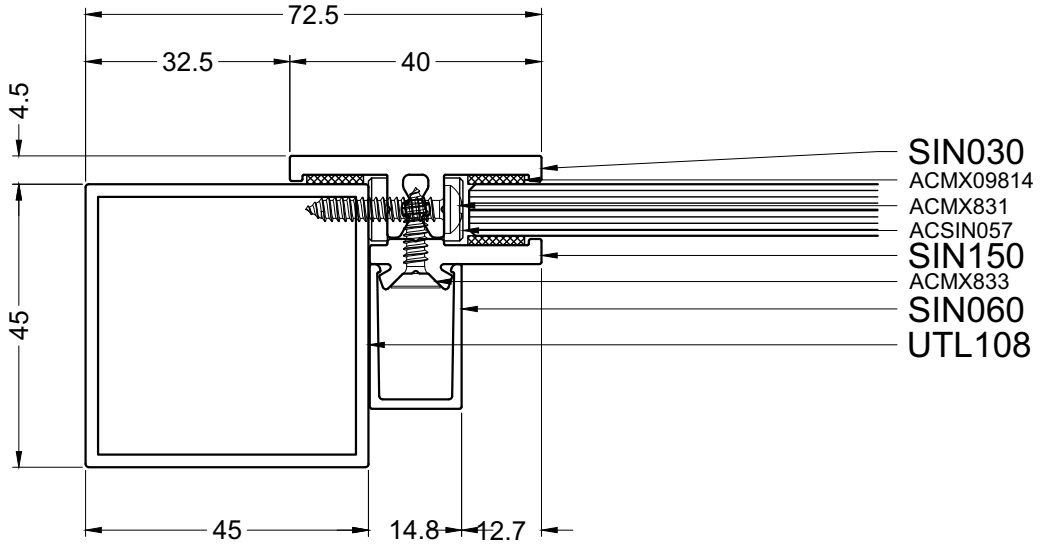
72.5
32.5
40
4.5
45
45
14.8
12.7
SIN030
ACMX09814
ACMX831
ACSIN057
SIN150
ACMX833
SIN060
UTL108

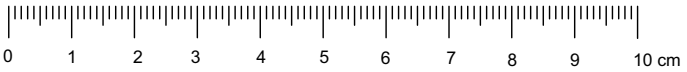
0
1
2
3
4
5
6
7
8
9
10 cm

2-UTL-SIN030

# 2

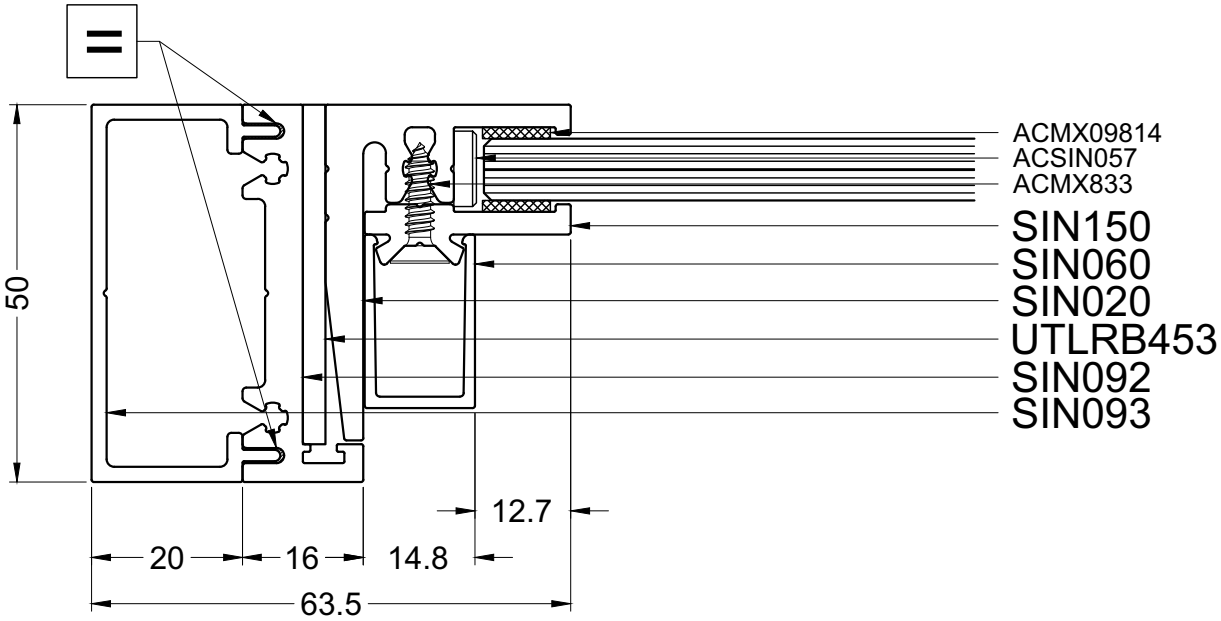


2-(SIN093)SIN092-SIN020



aliplast
member of
CORIALIS

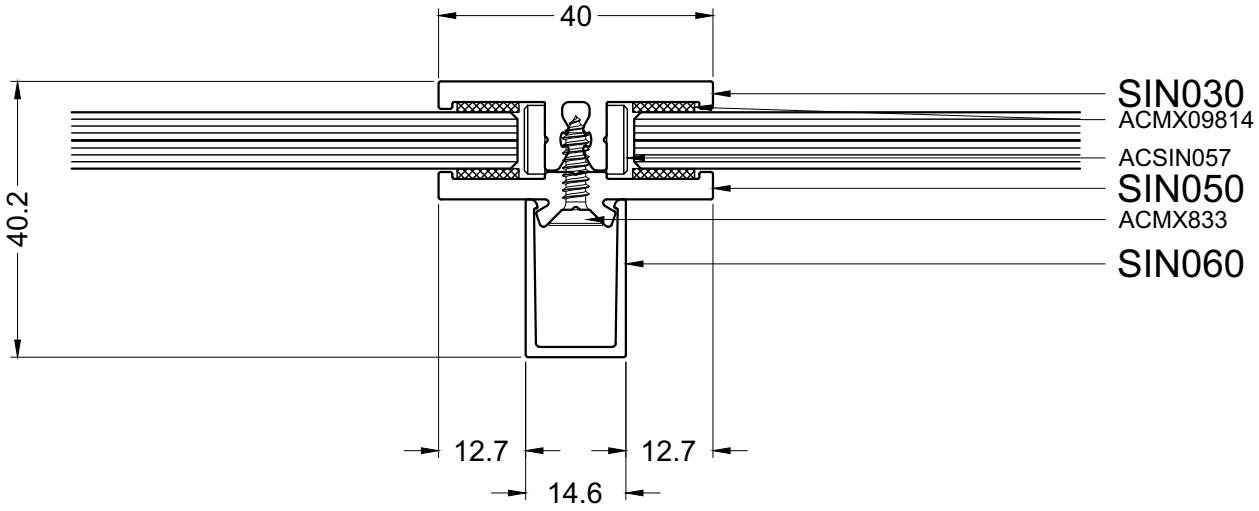
40
40.2
SIN030
ACMX09814
ACSIN057
SIN050
ACMX833
SIN060
12.7
12.7
14.6

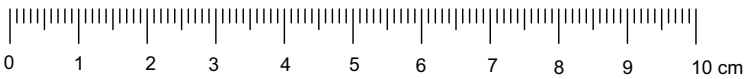
0
1
2
3
4
5
6
7
8
9
10 cm

3-SIN030

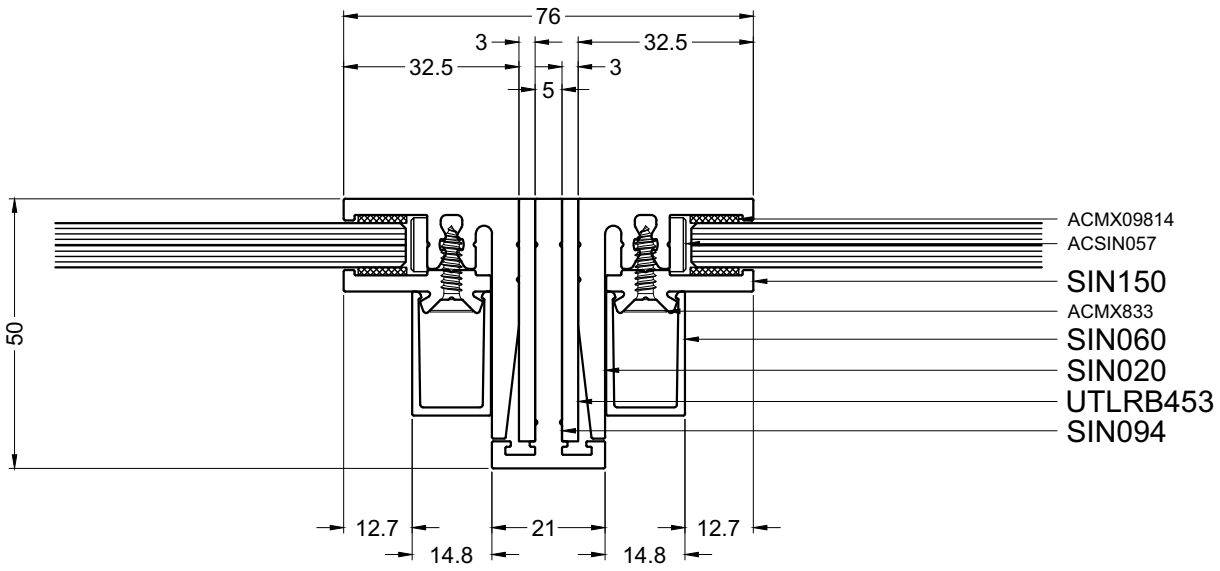


3-SIN020-SIN094-SIN020

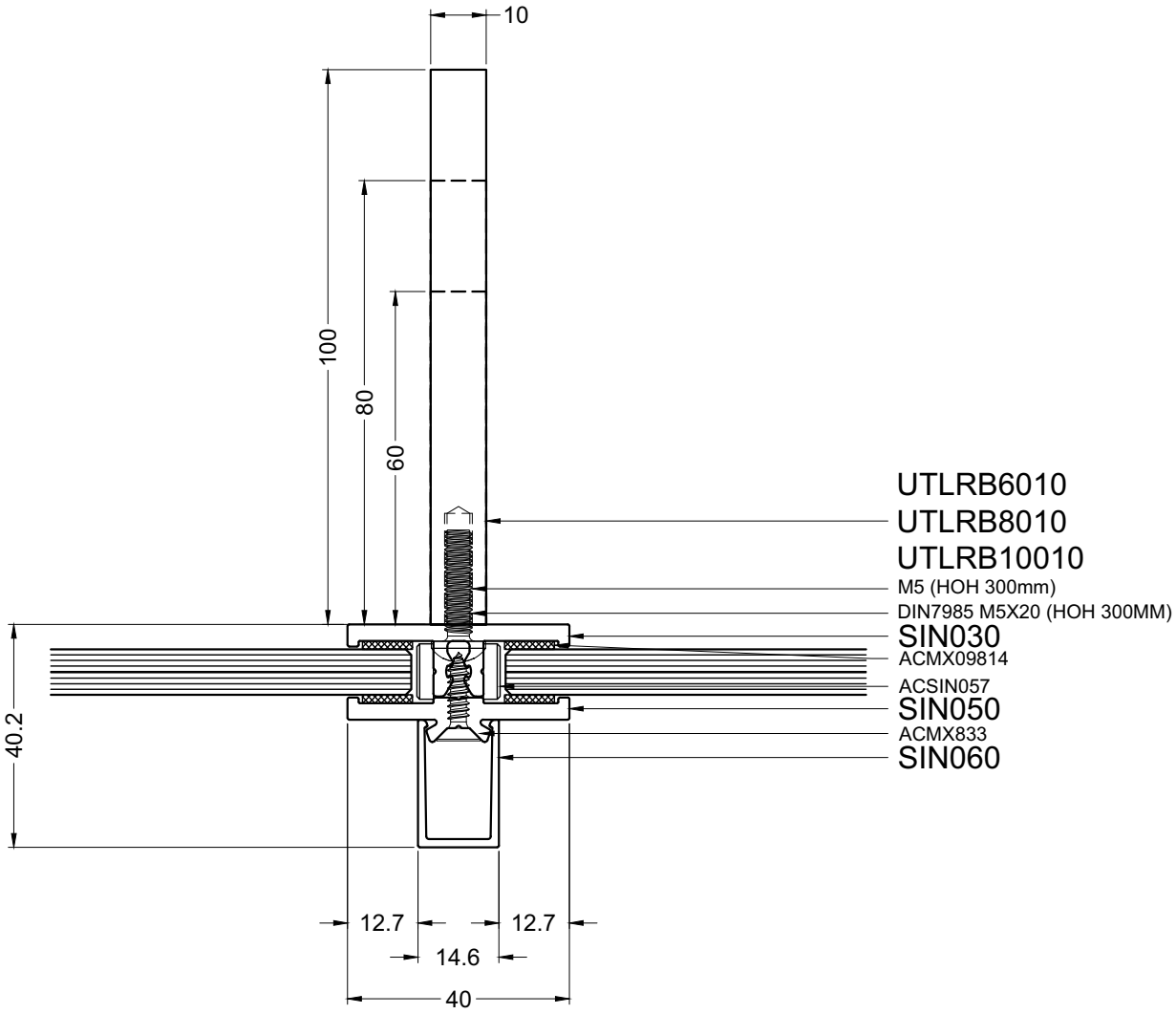
10
100
80
60
40.2
12.7
12.7
14.6
40
UTLRB6010
UTLRB8010
UTLRB10010
M5 (HOH 300mm)
DIN7985 M5X20 (HOH 300MM)
SIN030
ACMX09814
ACSIN057
SIN050
ACMX833
SIN060

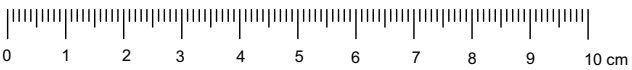
0 1 2 3 4 5 6 7 8 9 10 cm

3-SIN030-UTL

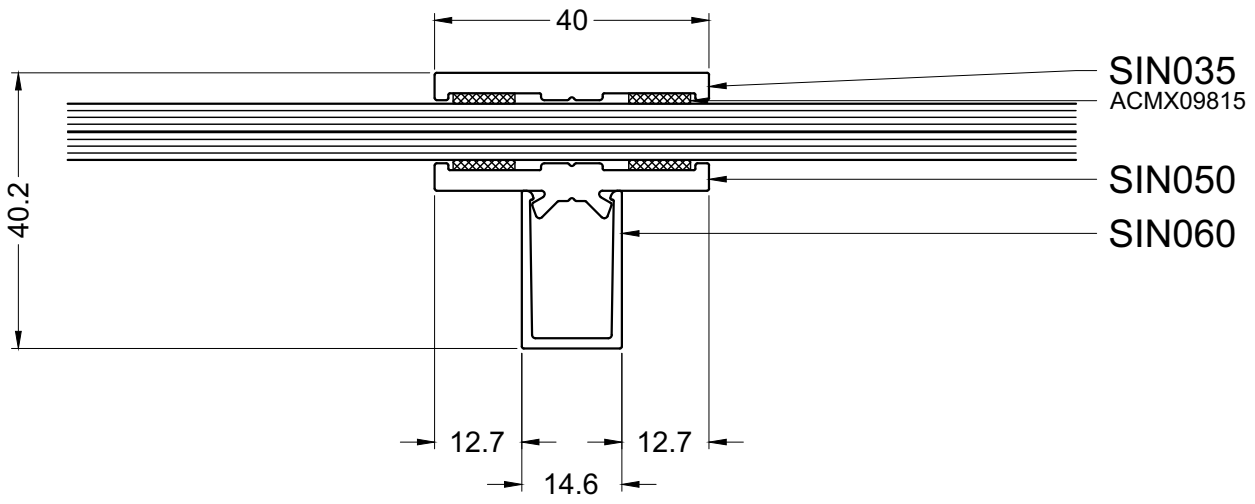
40
SIN035
ACMX09815
SIN050
SIN060
40.2
12.7
12.7
14.6

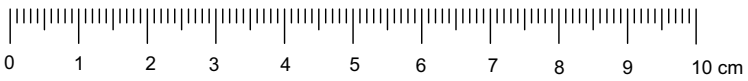
0
1
2
3
4
5
6
7
8
9
10 cm

3-SIN035

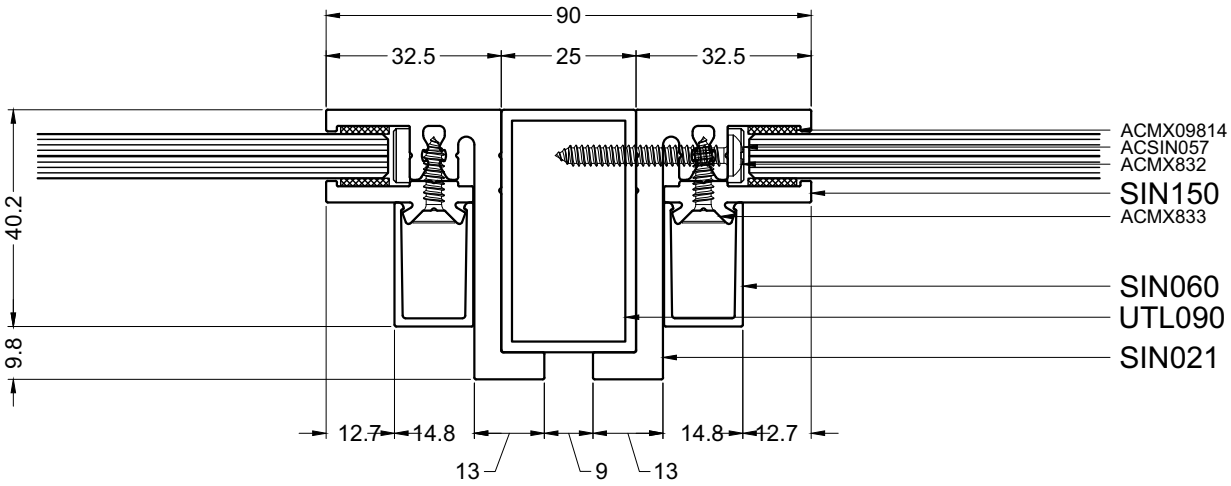


3-UTL2-SIN021

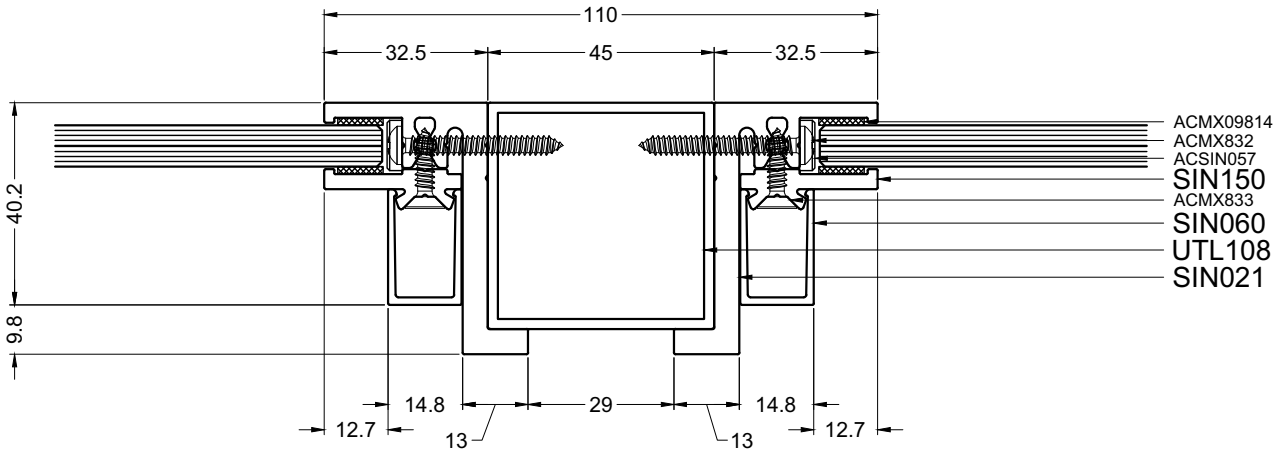
110
32.5
45
32.5
40.2
9.8
14.8
29
14.8
12.7
13
13
12.7
ACMX09814
ACMX832
ACSIN057
SIN150
ACMX833
SIN060
UTL108
SIN021

3-UTL-SIN021

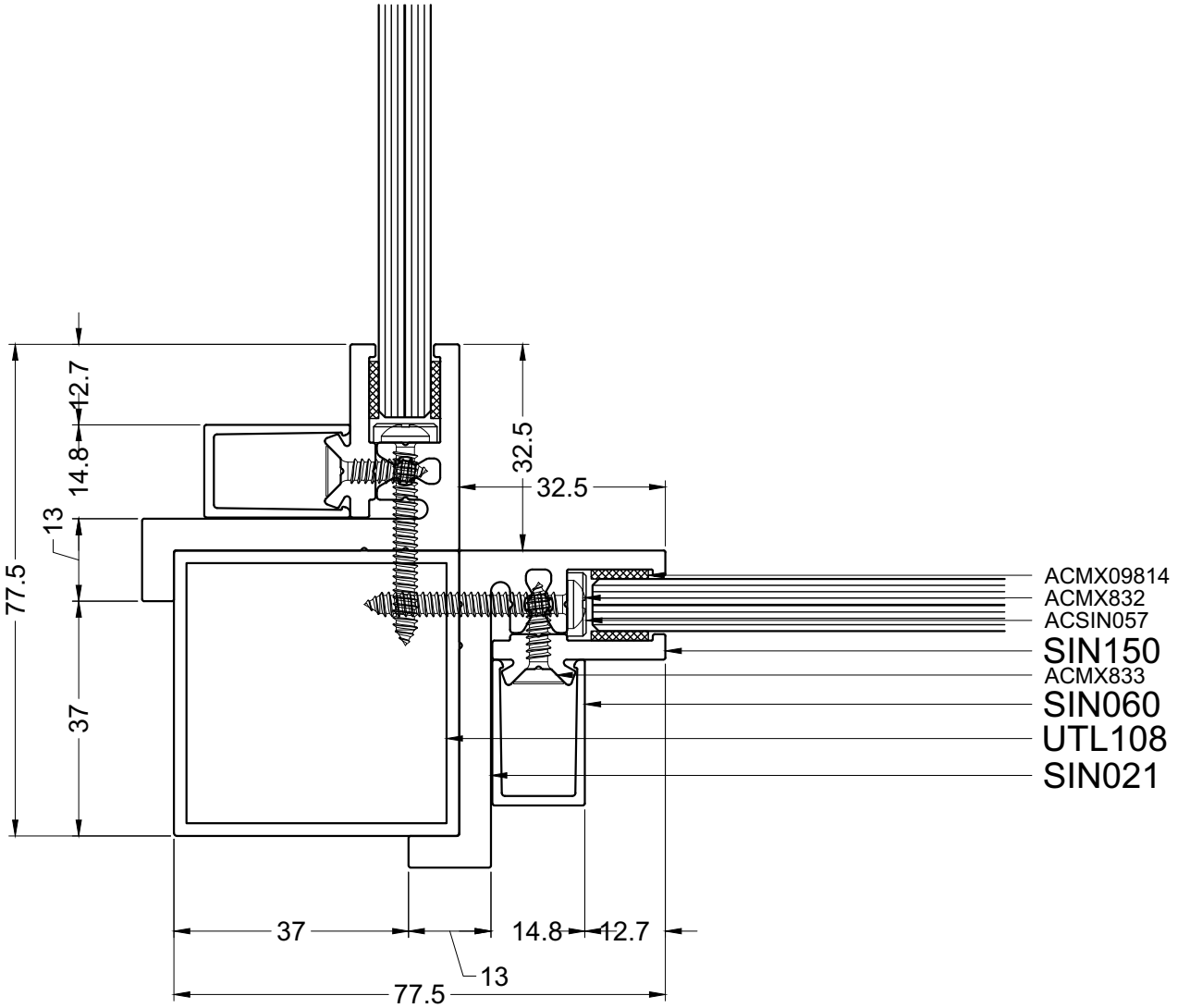
12.7
14.8
13
77.5
37
32.5
32.5
ACMX09814
ACMX832
ACSIN057
SIN150
ACMX833
SIN060
UTL108
SIN021
37
14.8
12.7
13
77.5

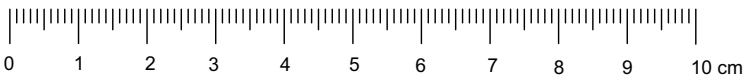
0
1
2
3
4
5
6
7
8
9
10 cm

4-UTL-SIN021

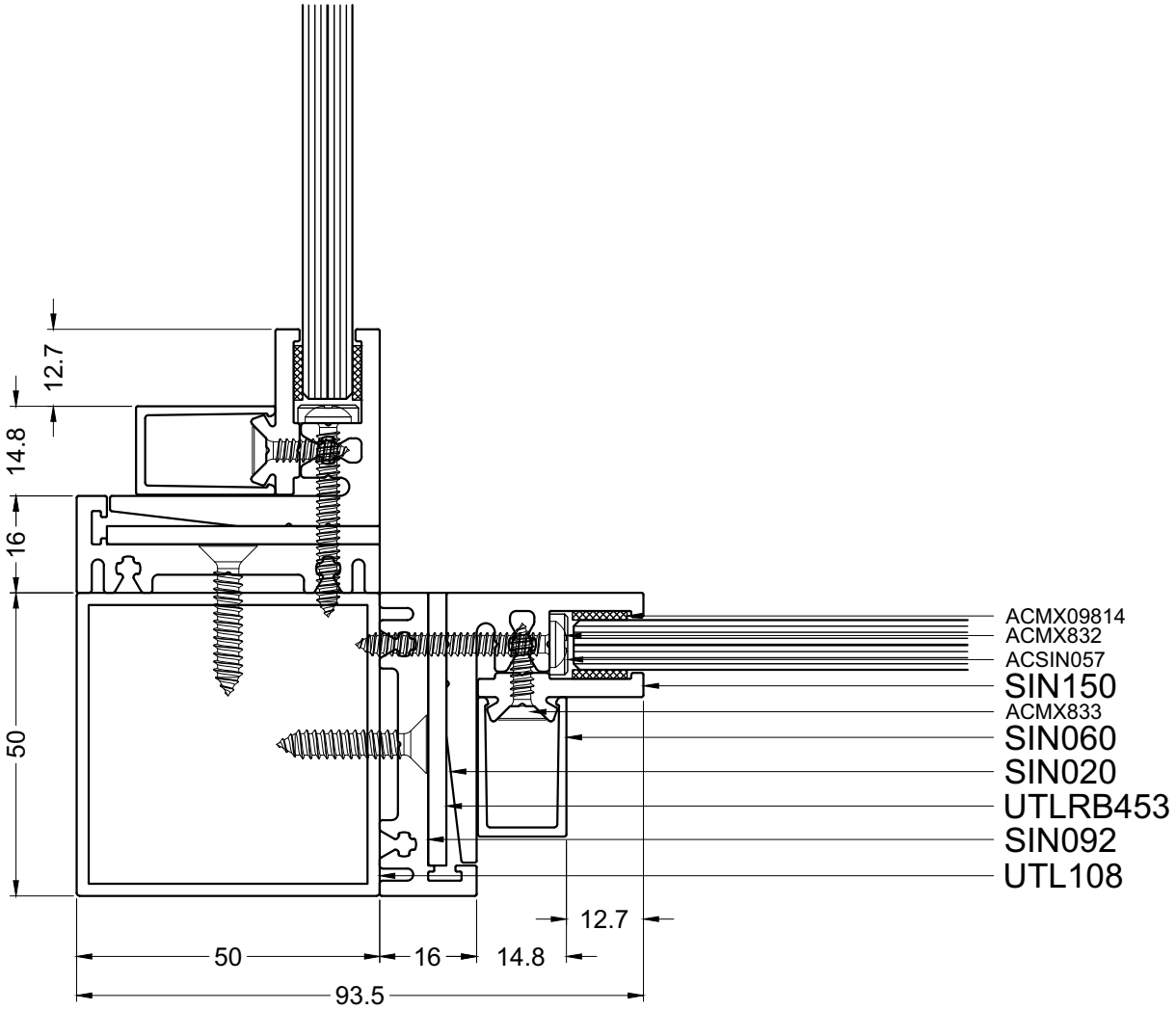


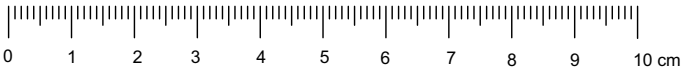


4-UTL-SIN092



aliplast
member of
CORIALIS

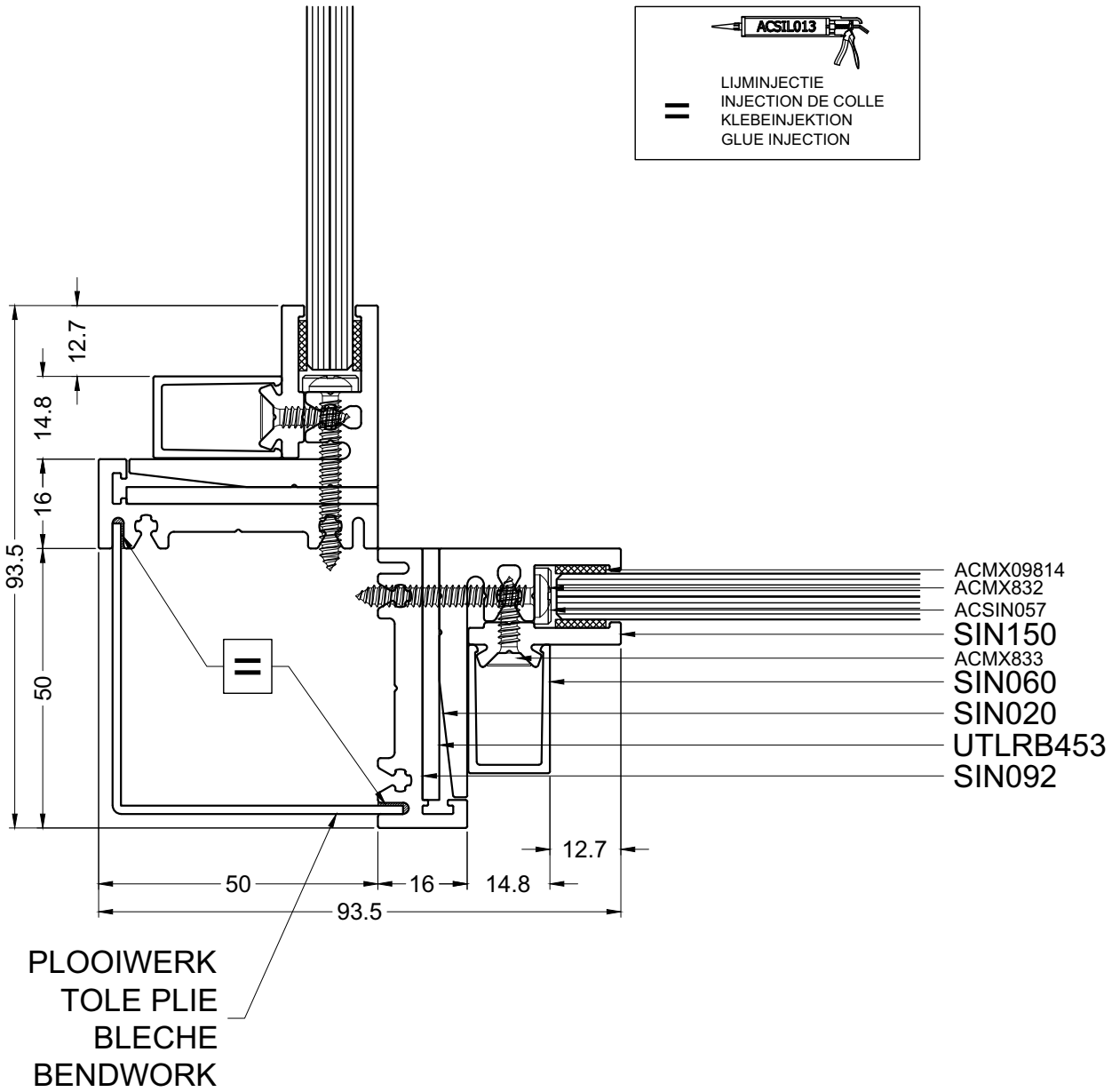
ACSIL013
=
LIJMINJECTIE
INJECTION DE COLLE
KLEBEINJEKTION
GLUE INJECTION
12.7
14.8
16
93.5
50
=
ACMX09814
ACMX832
ACSIN057
SIN150
ACMX833
SIN060
SIN020
UTLRB453
SIN092
12.7
50
16
14.8
93.5
PLOOIWERK
TOLE PLIE
BLECHE
BENDWORK

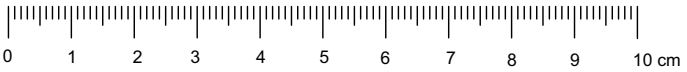
0 1 2 3 4 5 6 7 8 9 10 cm

4-L-SIN092

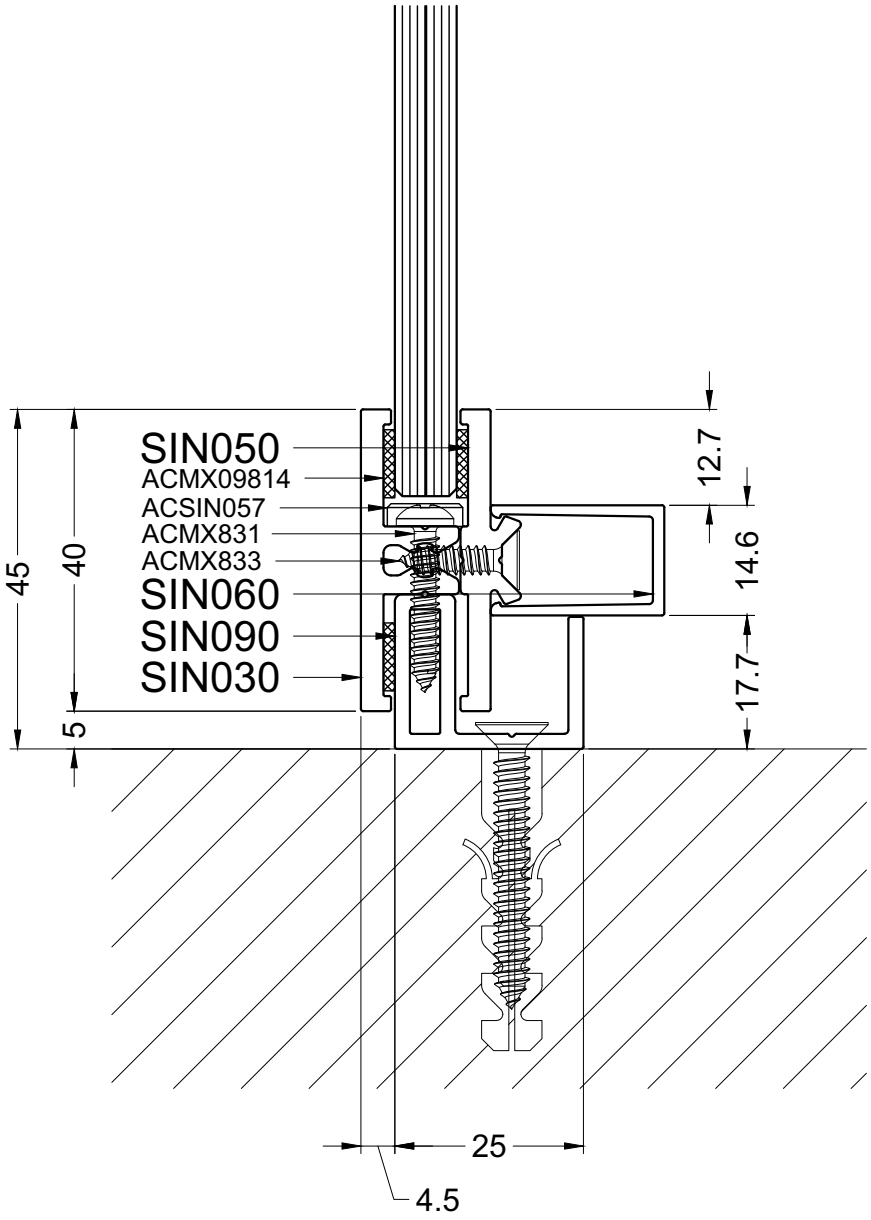


5-SIN090-SIN030(SIN060)

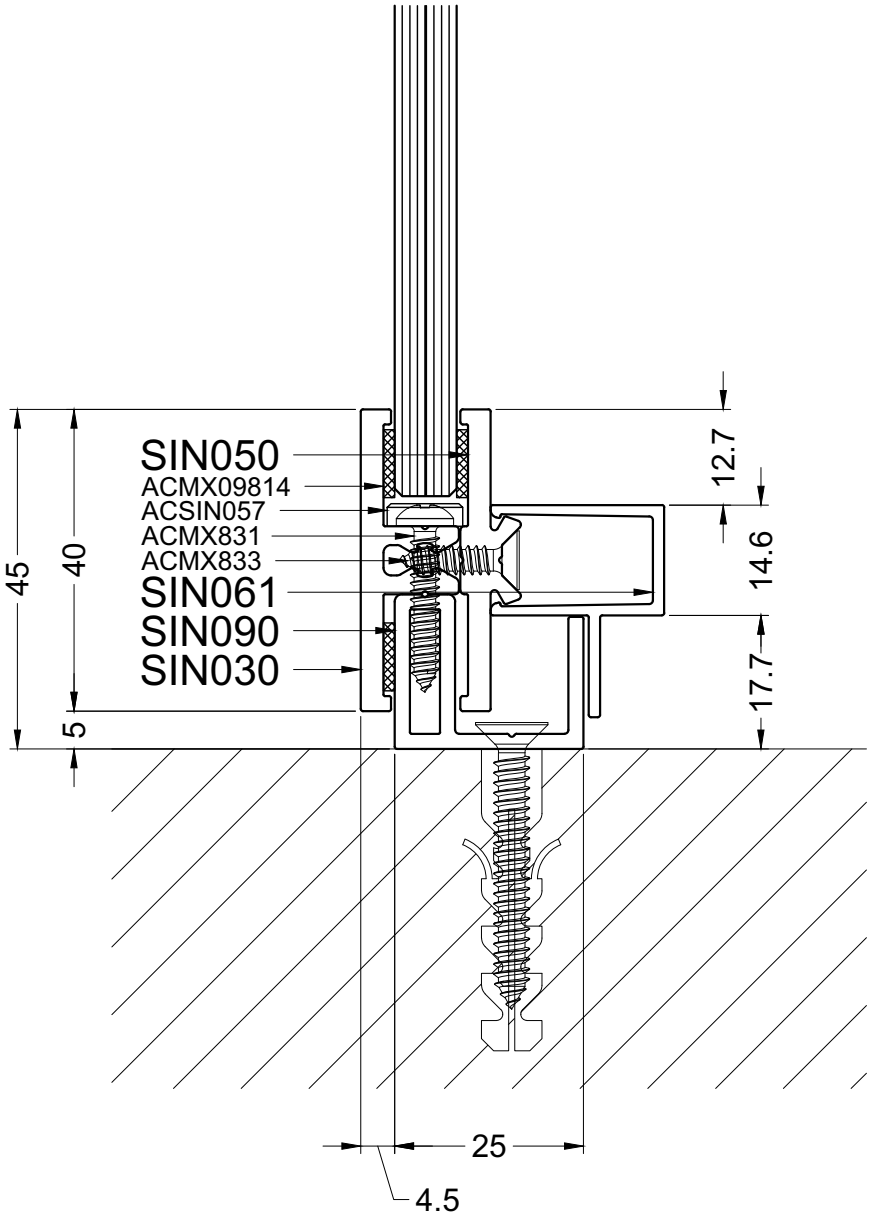


5-SIN090-SIN030(SIN061)

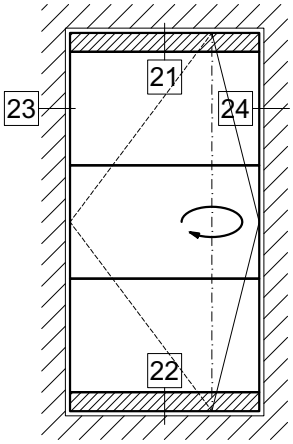


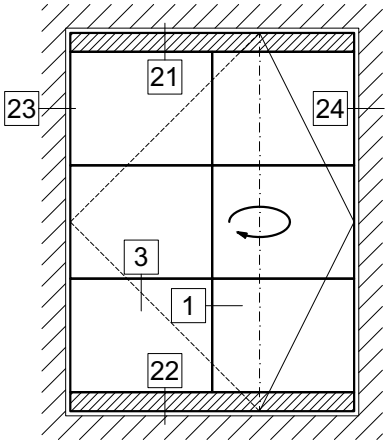


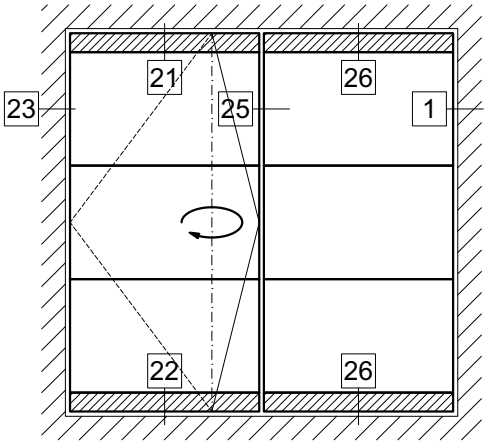


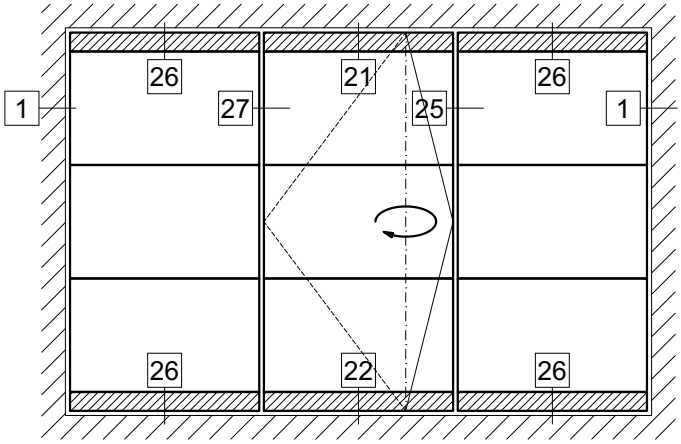


TYPE021



aliplast
member of
CORIALIS

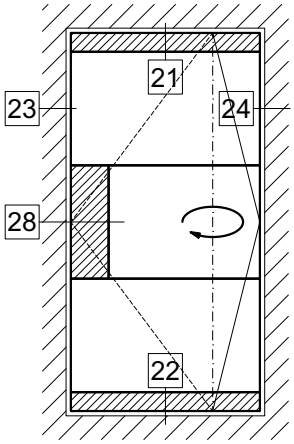
21
23
24
28
22

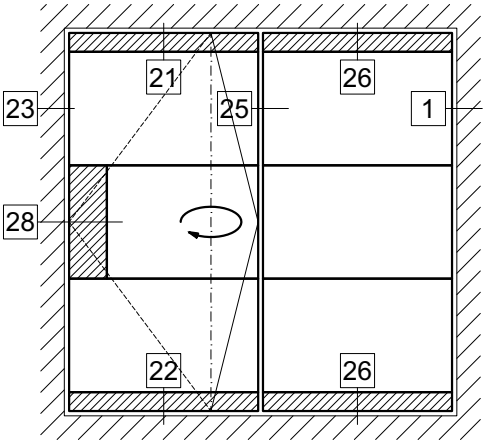
21
26
23
25
1
28
22
26

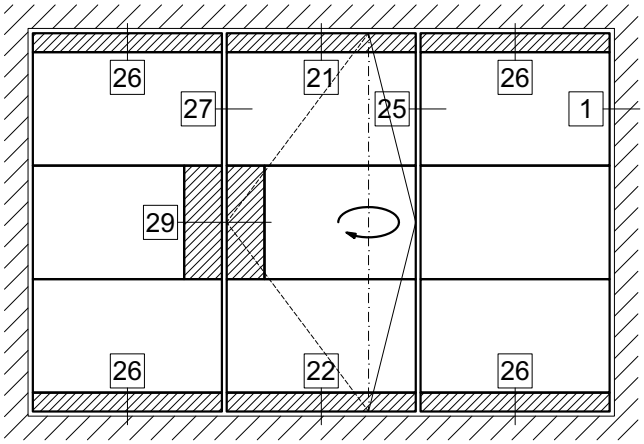
26
21
26
27
25
1
29
26
22
26

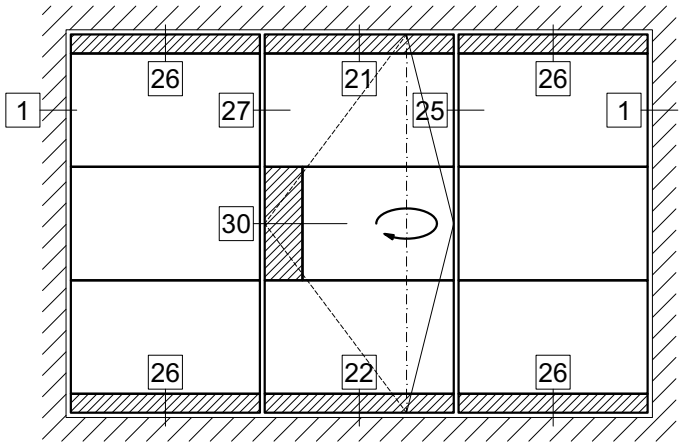
26
21
26
1
27
25
1
30
26
22
26

TYPE022

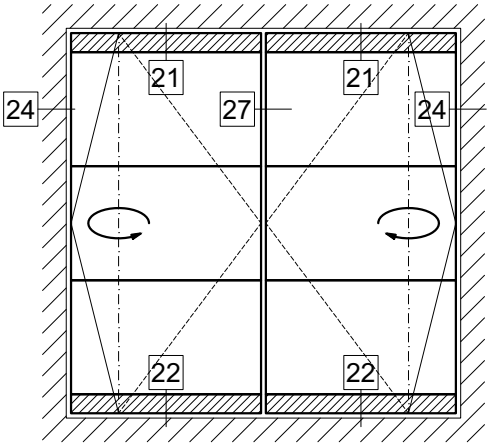


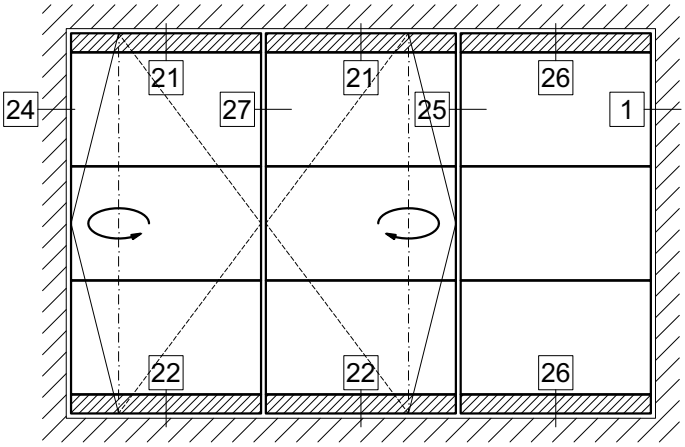


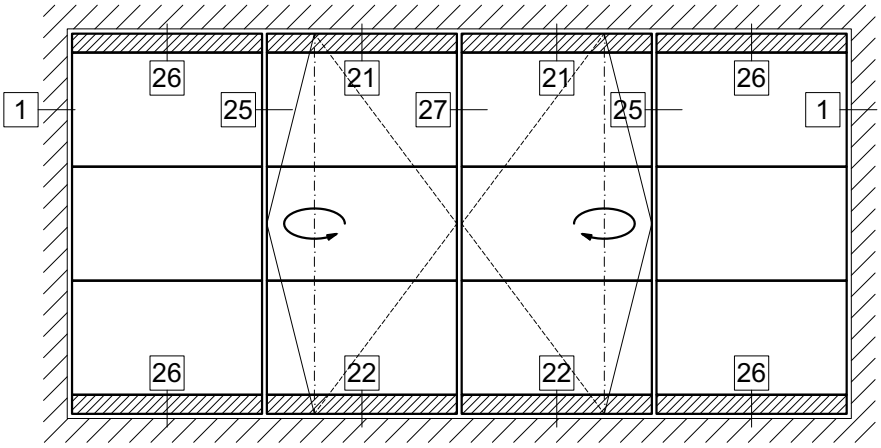


TYPE023



aliplast
member of
CORIALIS

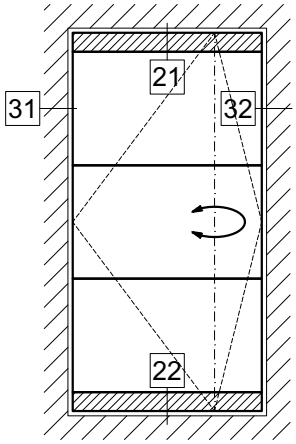
31
21
32
22

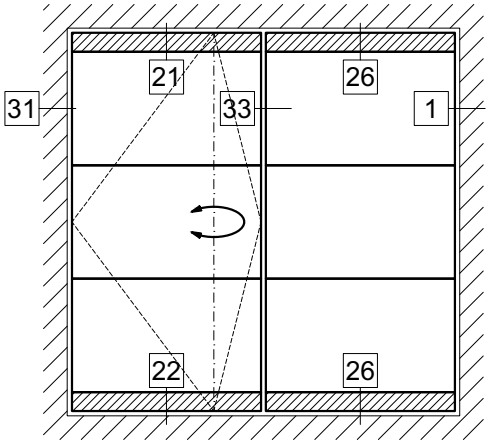
31
21
33
26
1
22
26

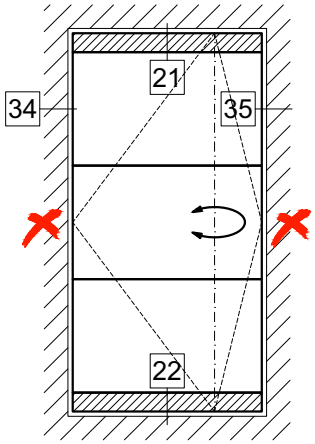
34
21
35
22

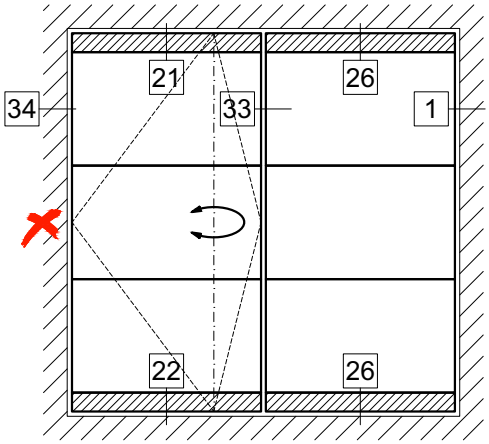
34
21
33
26
1
22
26

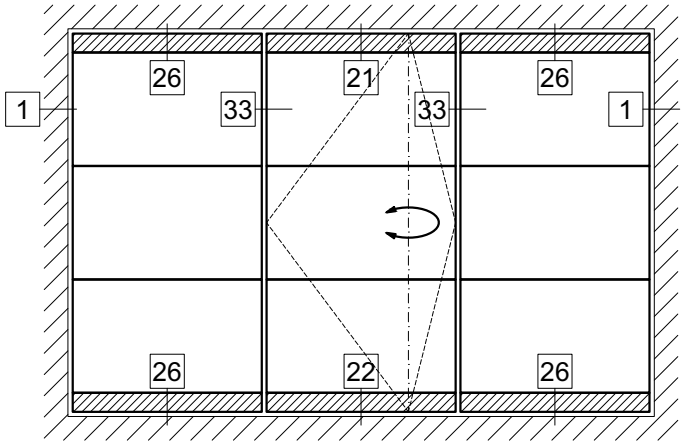
1
26
33
21
33
26
1
26
22
26

TYPE025

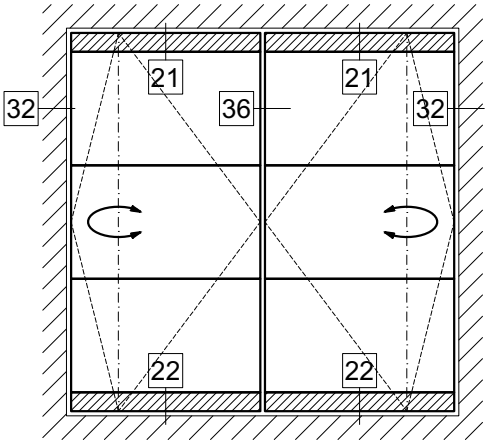
32
21
36
21
32
22
22

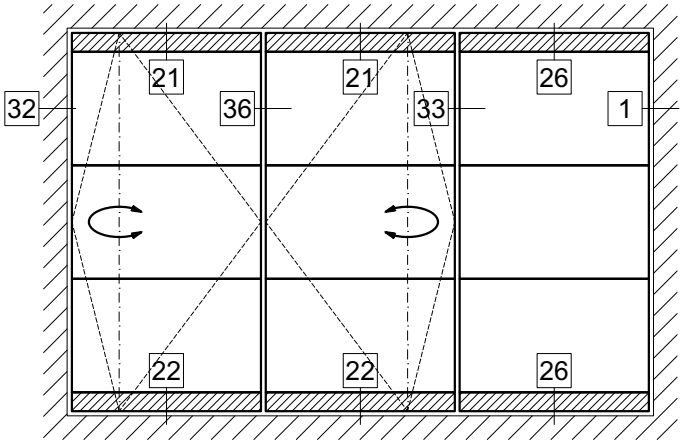
32
21
36
21
33
26
1
22
22
26

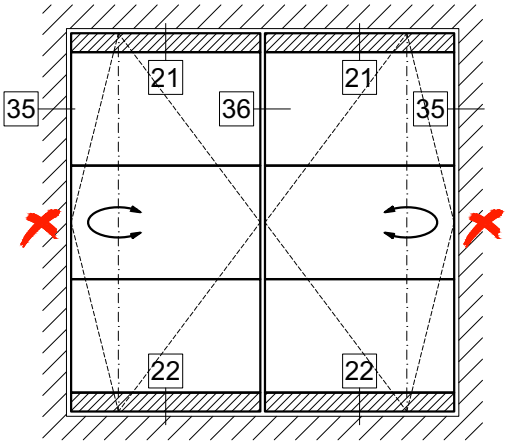
35
21
36
21
35
22
22

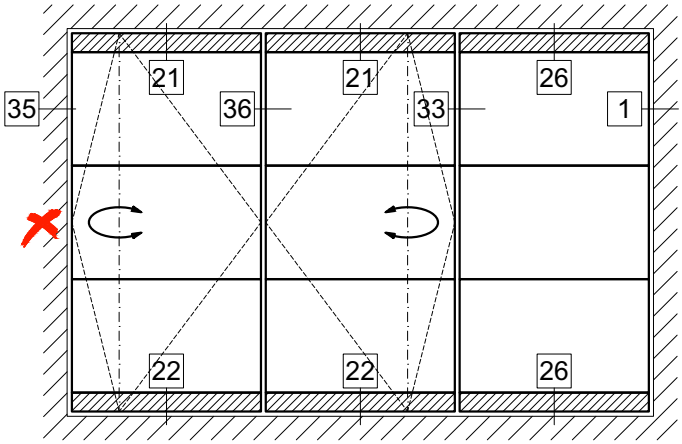
35
21
36
21
33
26
1
22
22
26

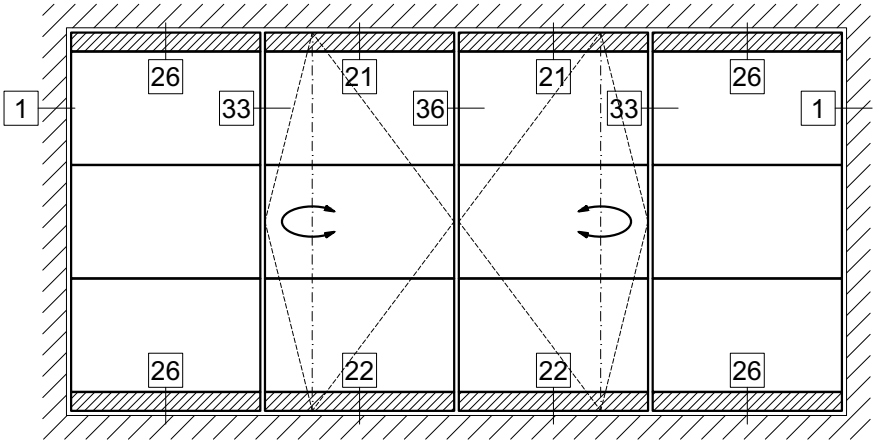
1
26
33
21
36
21
33
26
1
26
22
22
26

TYPE026

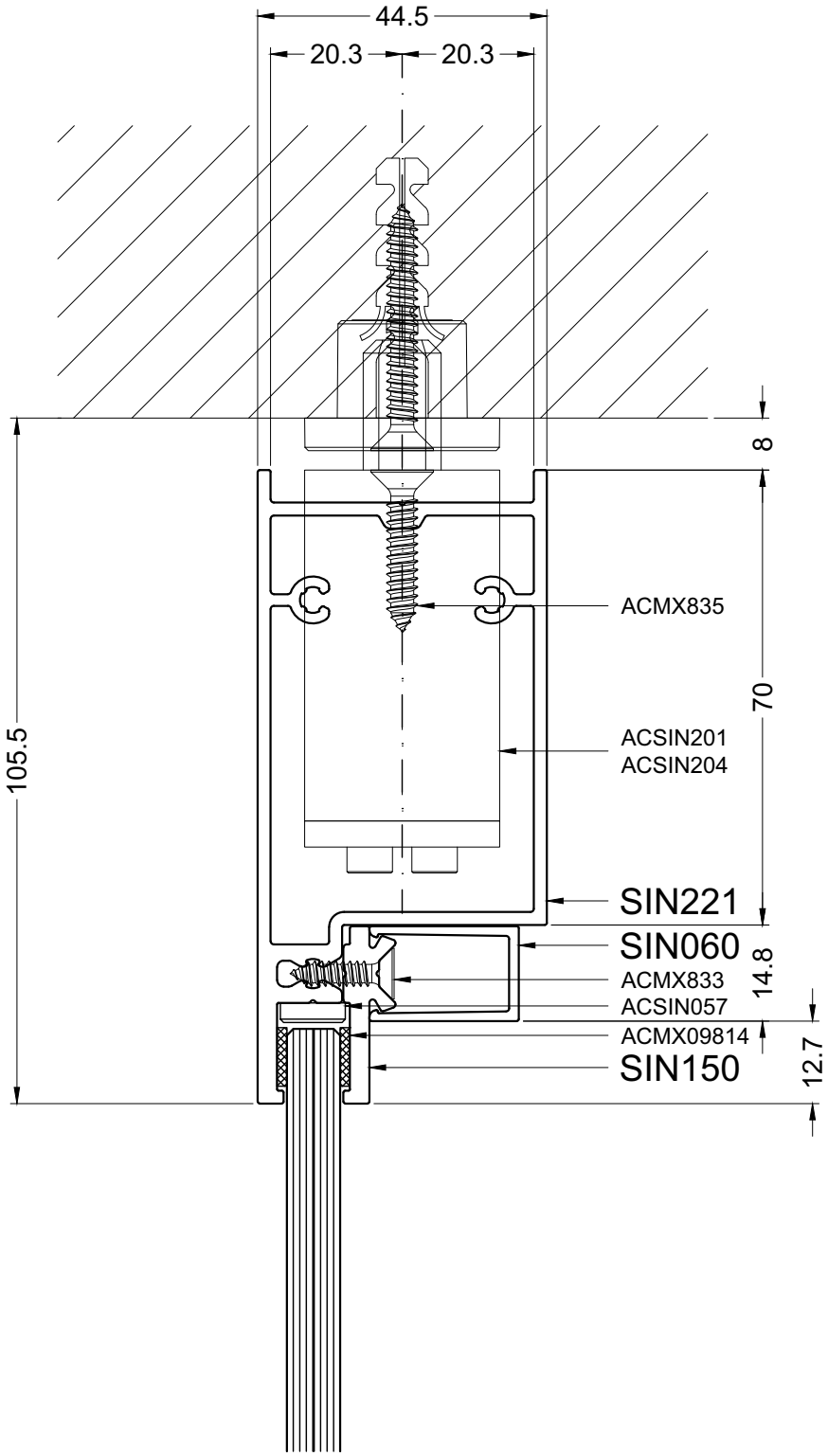

21-SIN221(100KG)

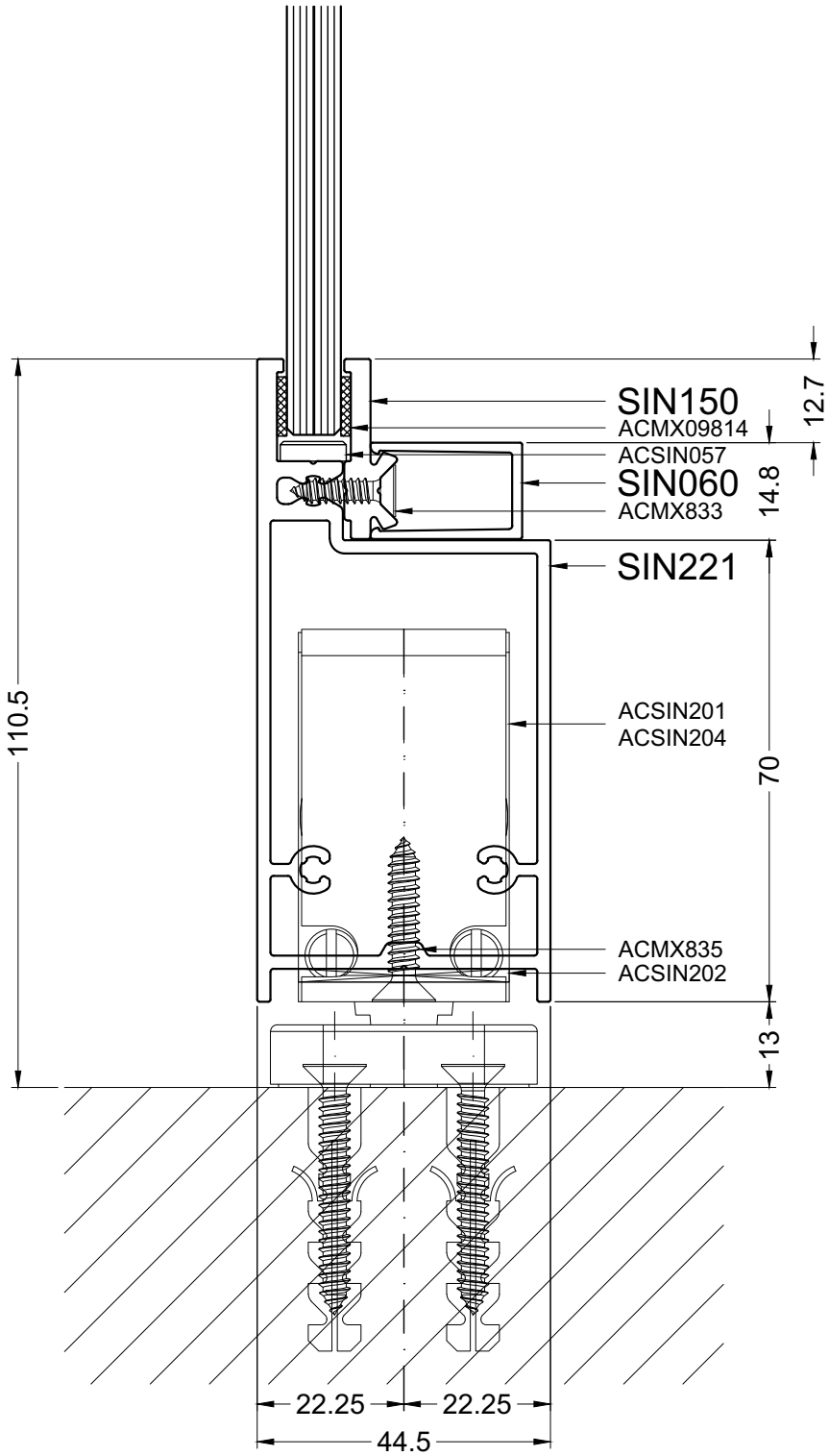


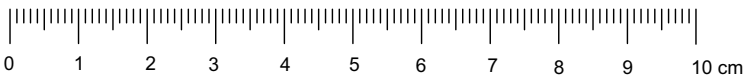


22-SIN221(100KG)

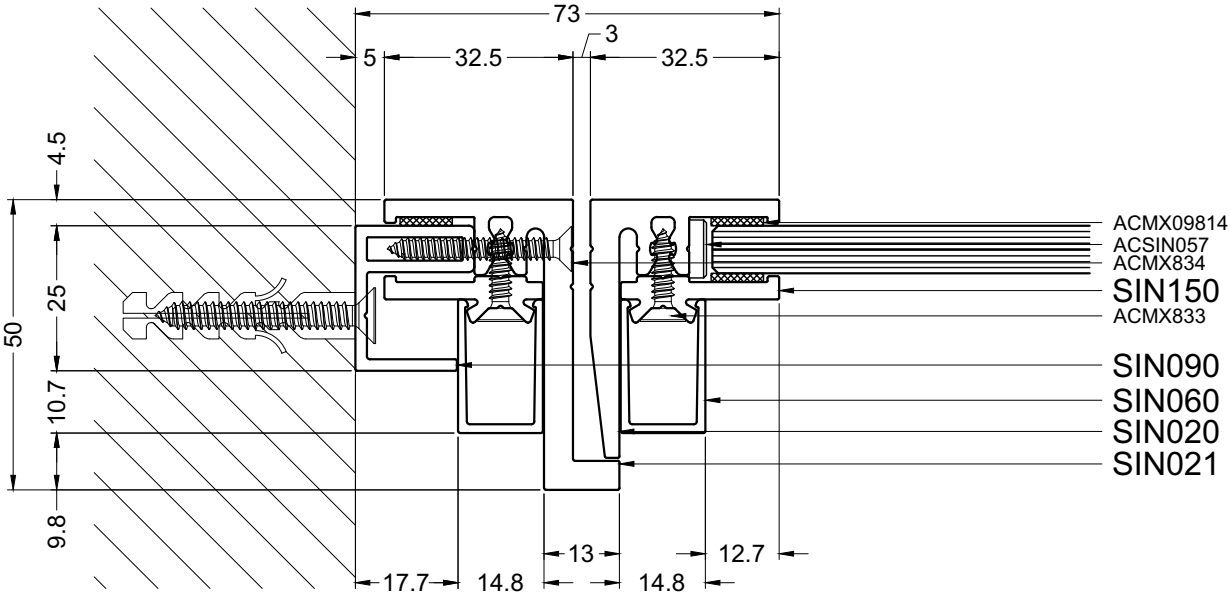


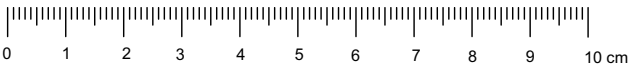


23-SIN090-SIN021-SIN020

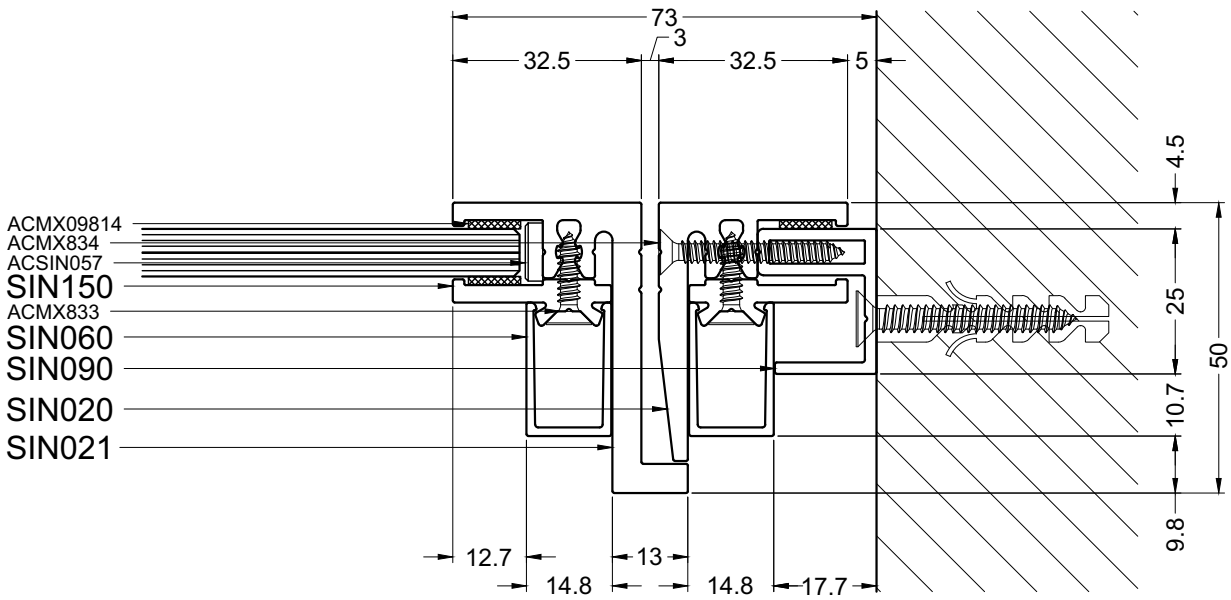


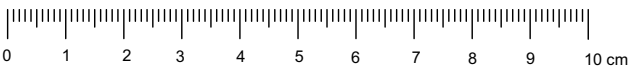


24-SIN090-SIN020-SIN021

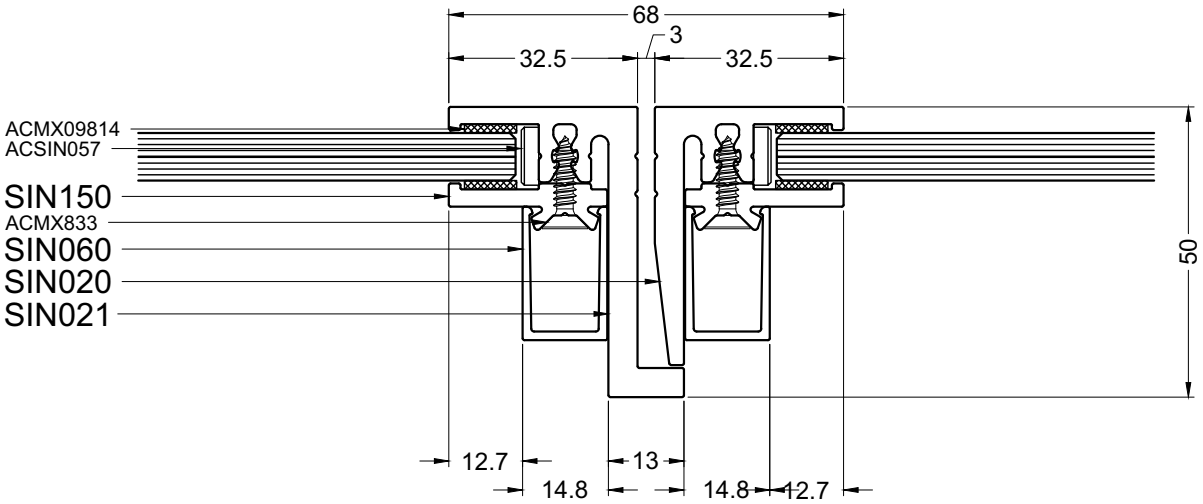


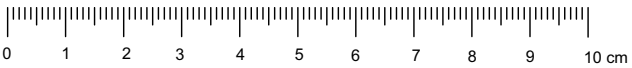


25-SIN020-SIN021

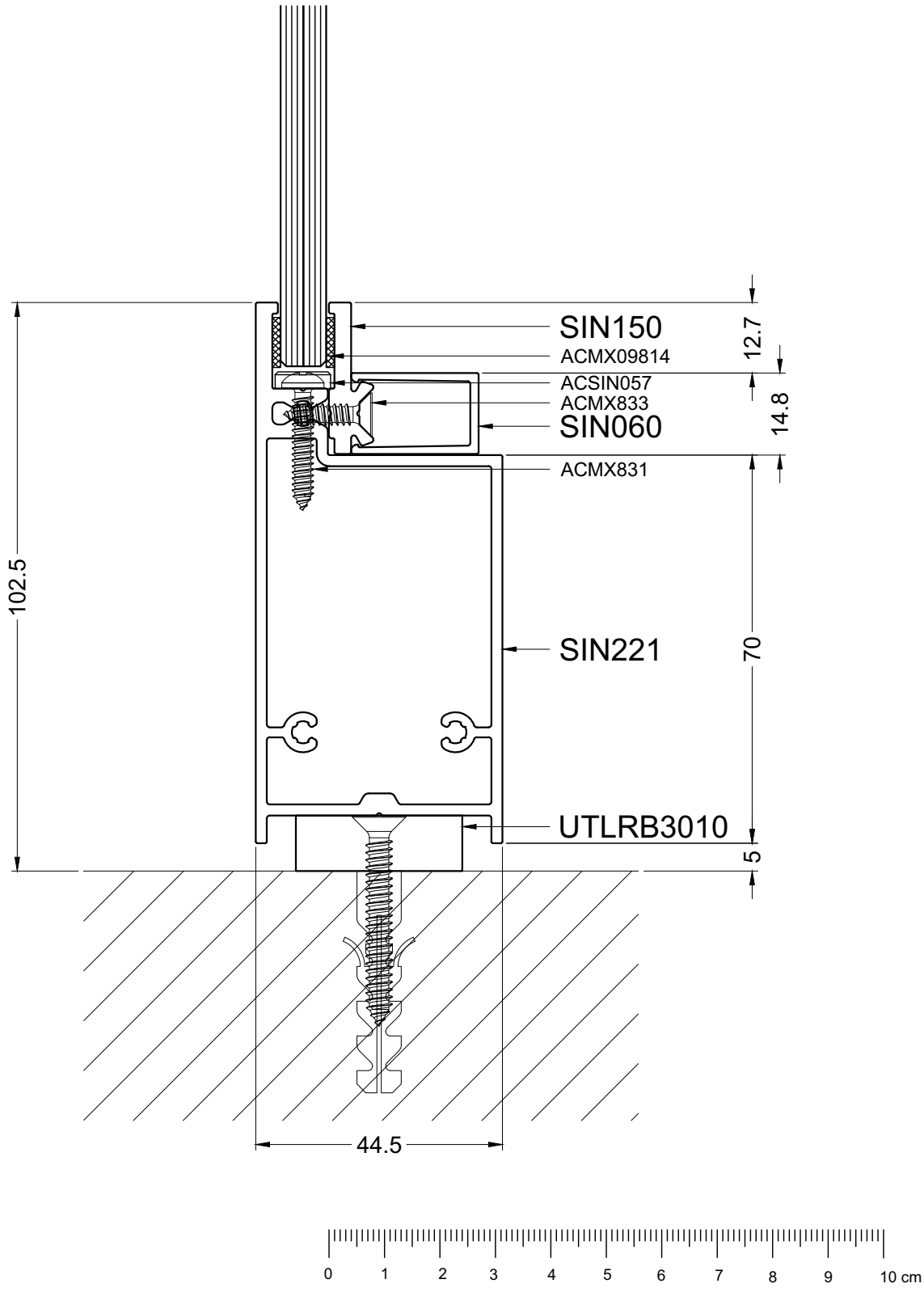
SIN150
ACMX09814
ACSIN057
ACMX833
SIN060
ACMX831
SIN221
UTLRB3010
12.7
14.8
70
5
102.5
44.5
0 1 2 3 4 5 6 7 8 9 10 cm

26-SIN221

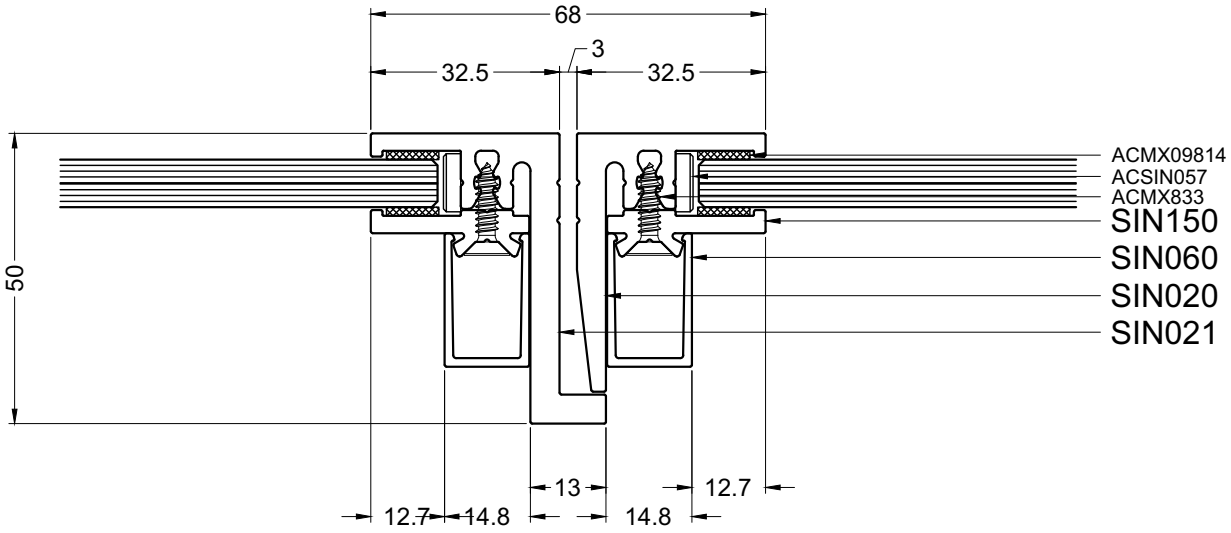


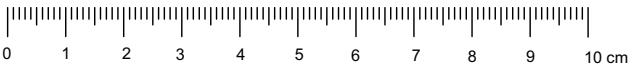


27-SIN021-SIN020

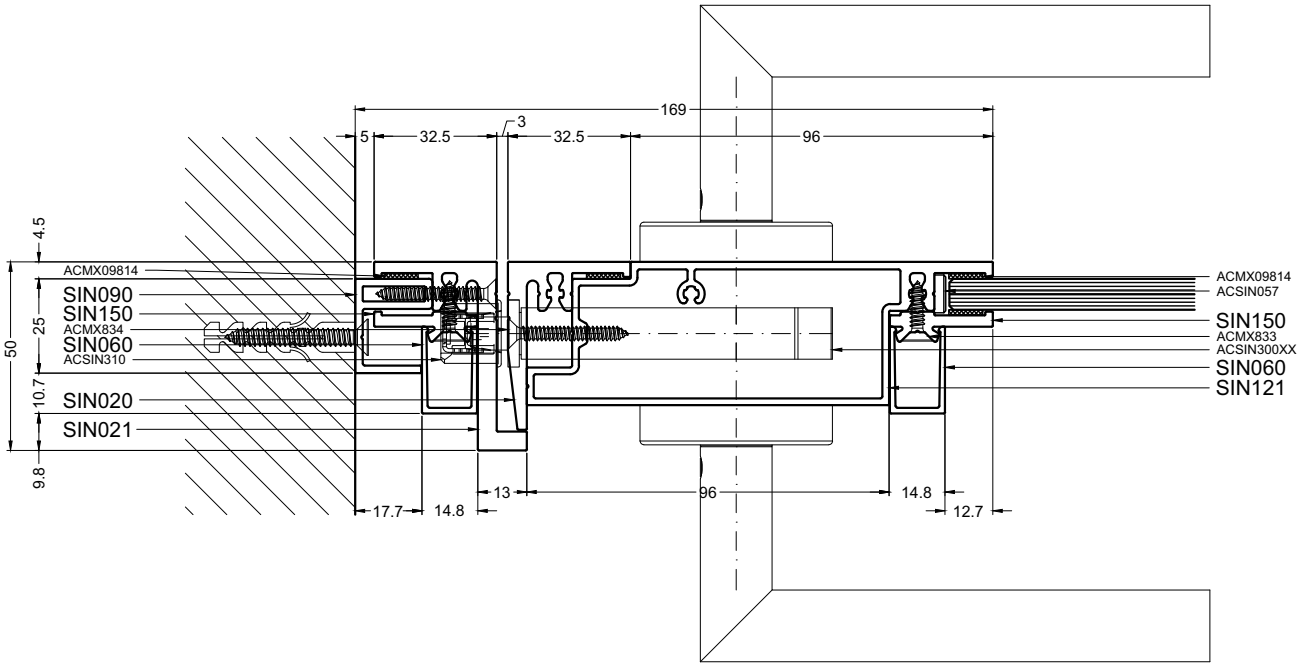


28-SIN090-SIN021-SIN020-SIN121



aliplast
member of
CORIALIS

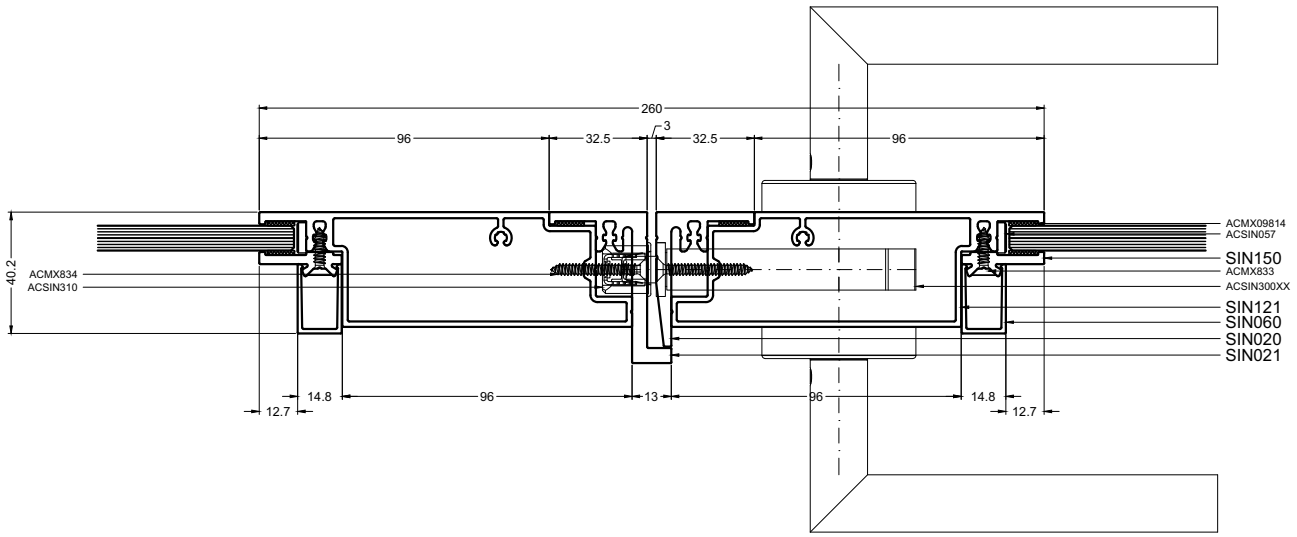


29-SIN121-SIN021-SIN020-SIN121

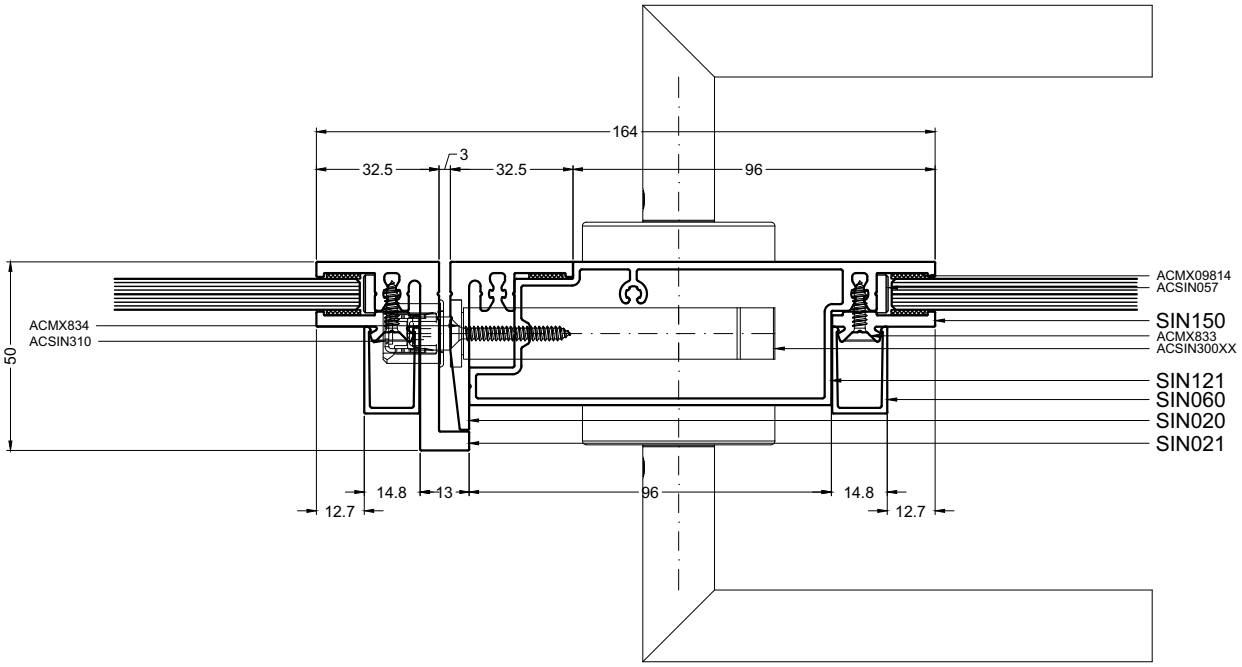


30-SIN021-SIN020-SIN121

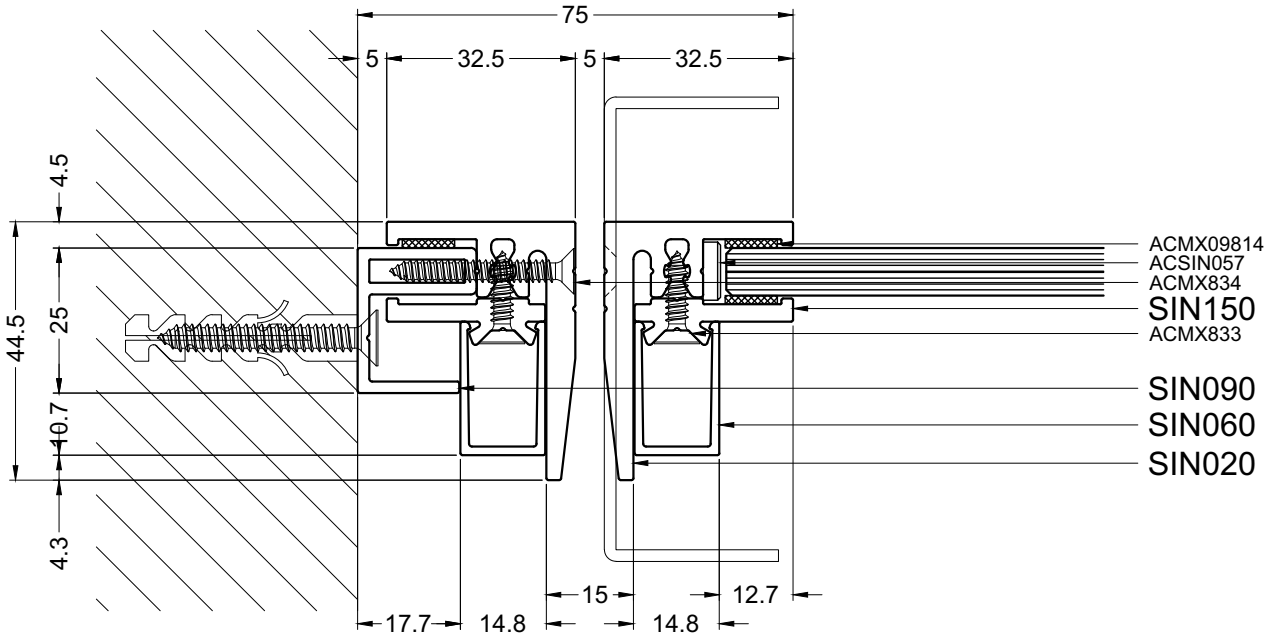


31-SIN090-SIN020-SIN020

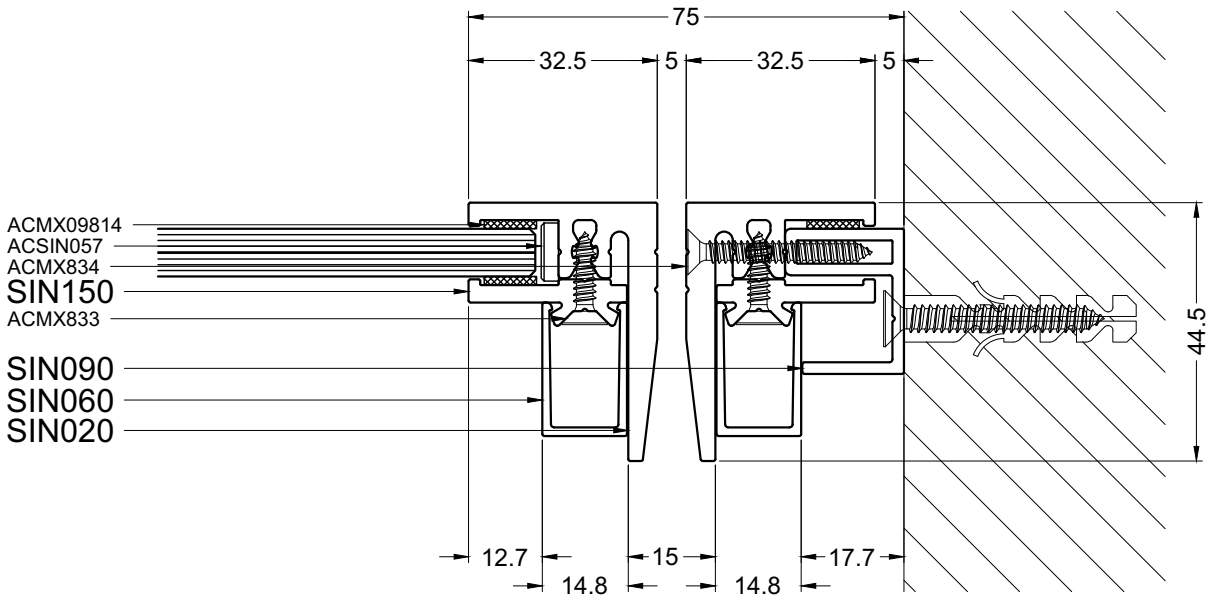


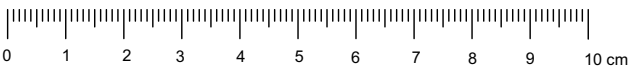


32-SIN090-SIN020-SIN020



aliplast
member of
CORIALIS

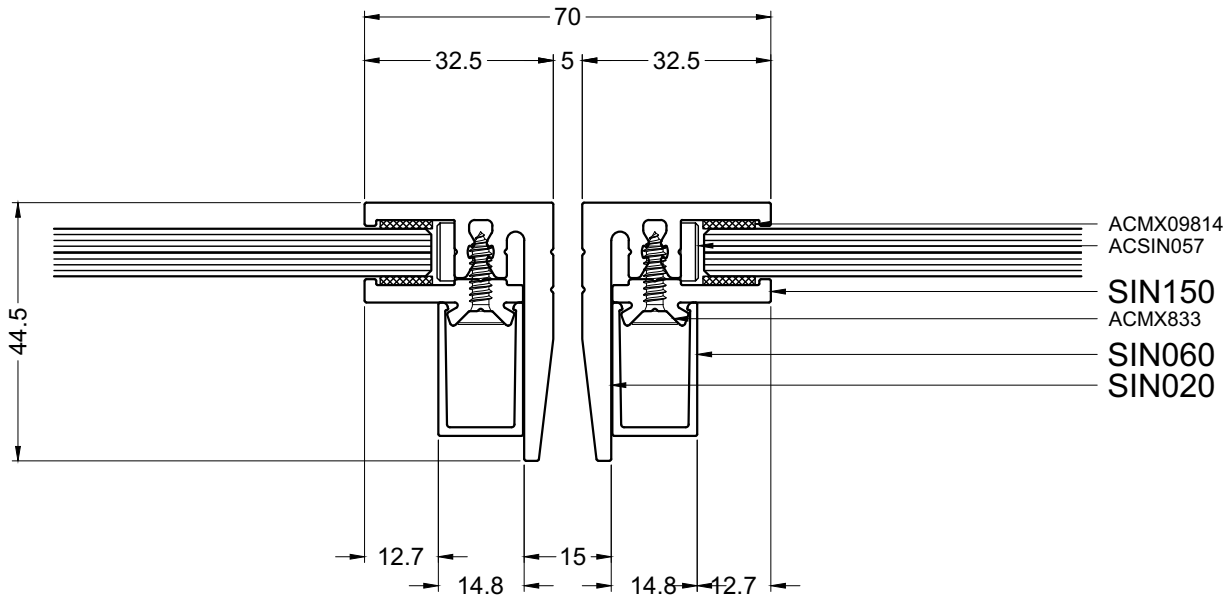


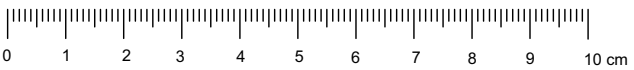


33-SIN020-SIN020

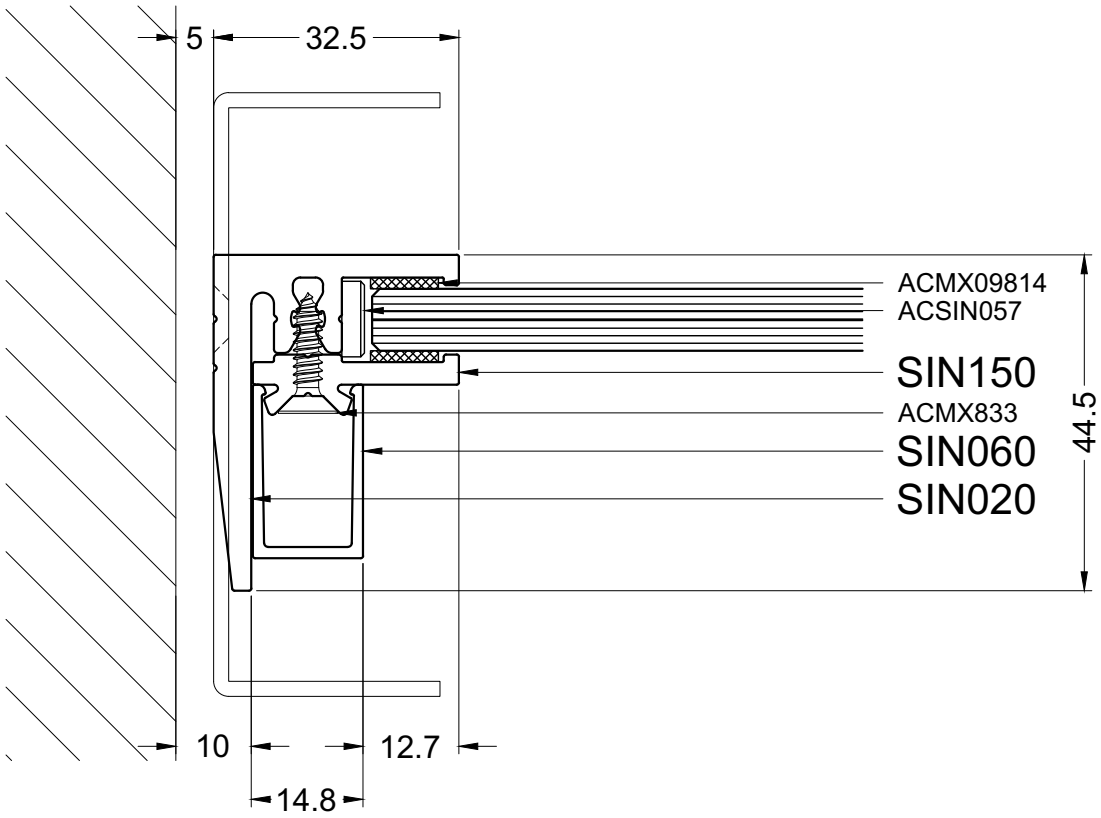
5
32.5
ACMX09814
ACSIN057
SIN150
ACMX833
SIN060
SIN020
44.5
10
12.7
14.8

34-SIN020

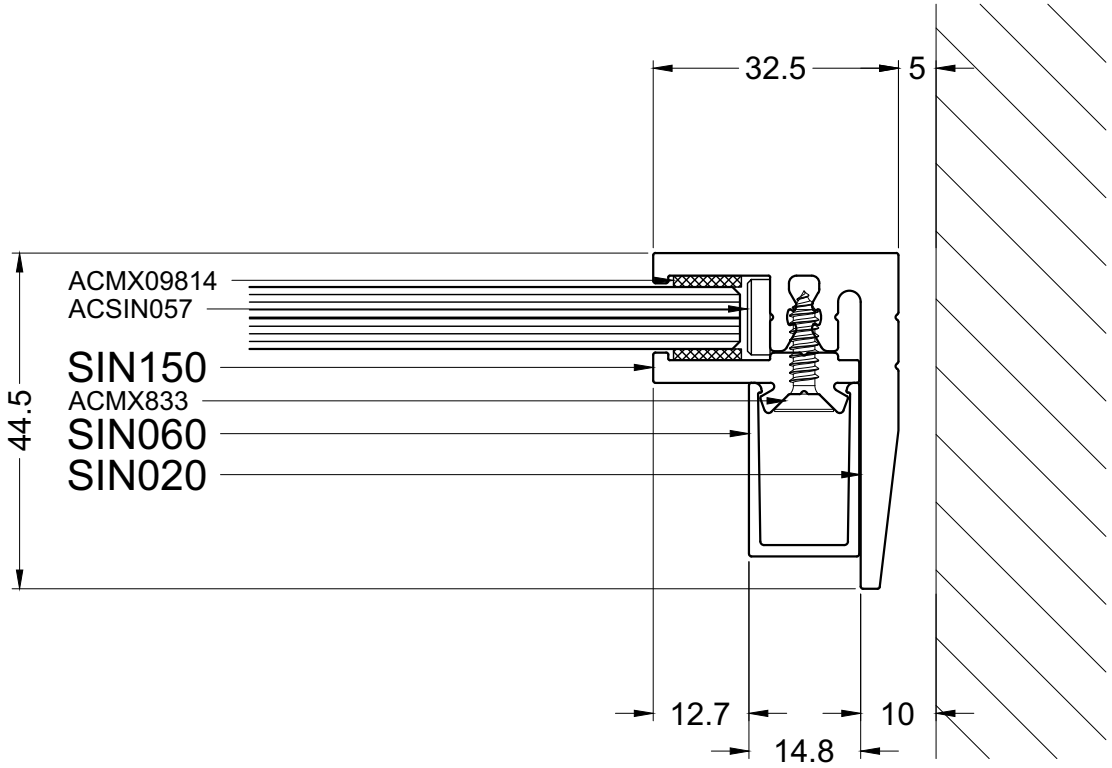
32.5
5
ACMX09814
ACSIN057
SIN150
ACMX833
SIN060
SIN020
44.5
12.7
10
14.8

35-SIN020

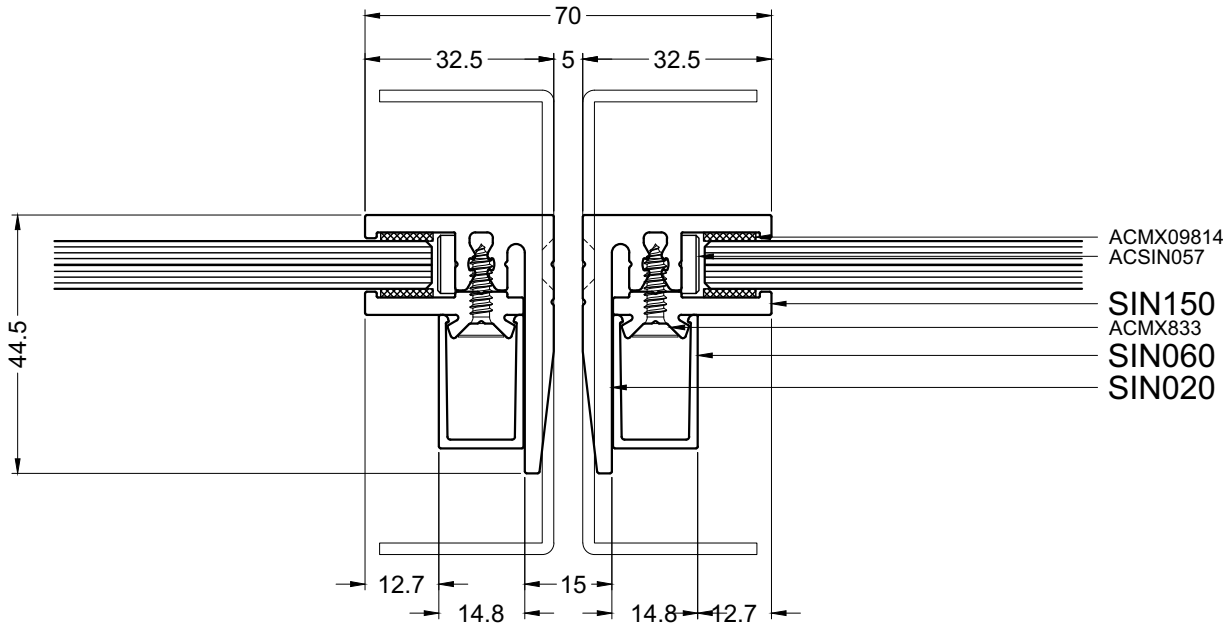


36-SIN020-SIN020

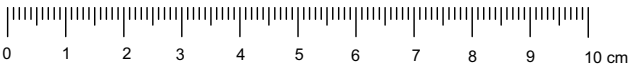

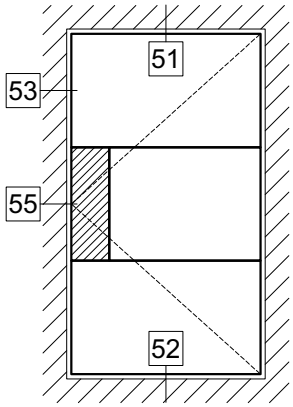
51
53
55
52

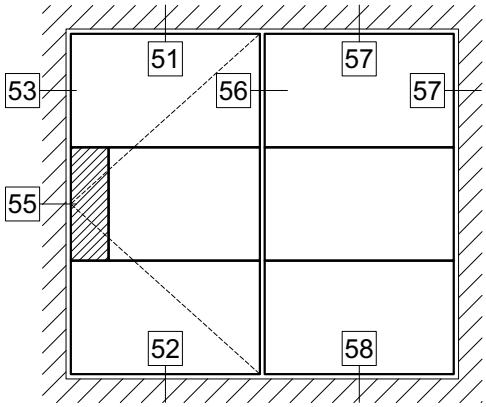
51
57
53
56
57
55
52
58

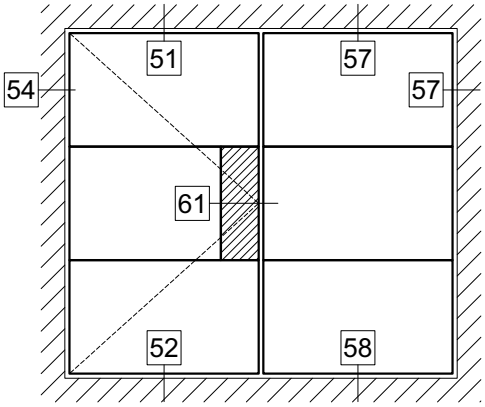
51
57
54
57
61
52
58

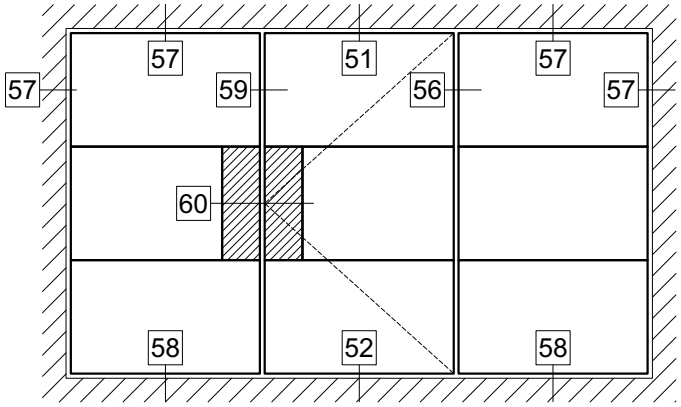
57
51
57
57
59
56
57
60
58
52
58

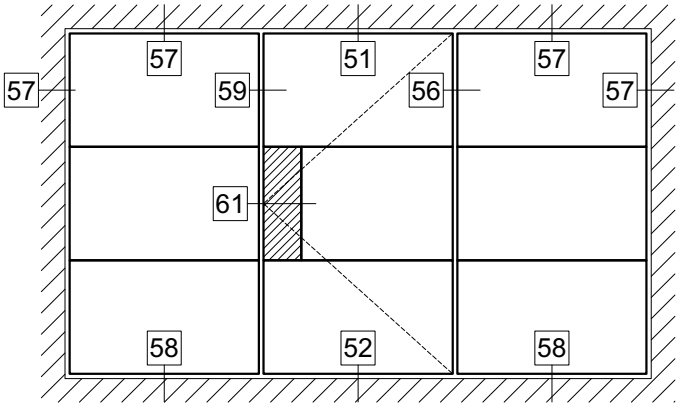
57
51
57
57
59
56
57
61
58
52
58

TYPE051

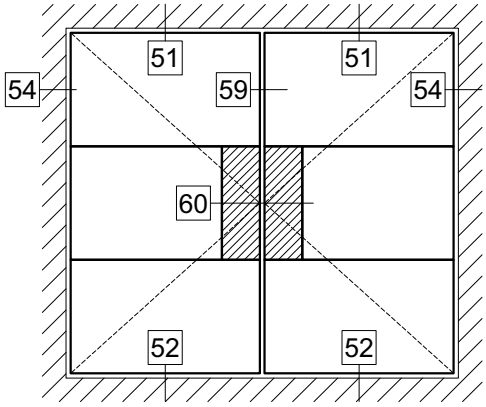
51
51
54
59
54
60
52
52

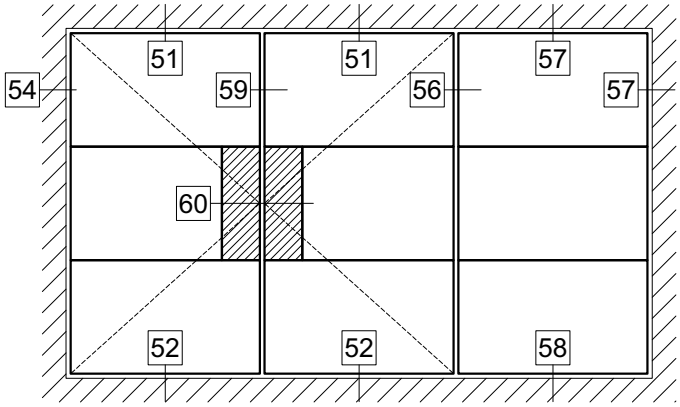
51
51
57
54
59
56
57
60
52
52
58

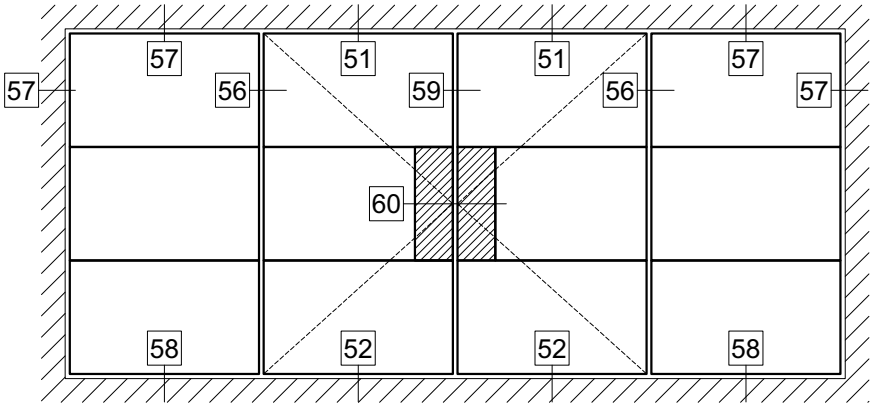
57
51
51
57
57
56
59
56
57
60
58
52
52
58

TYPE052

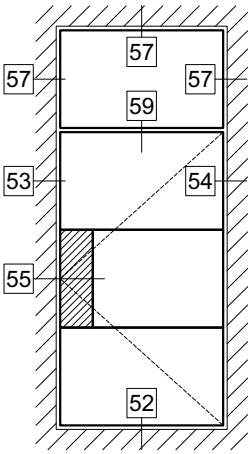
57
57
57
59
53
54
55
52

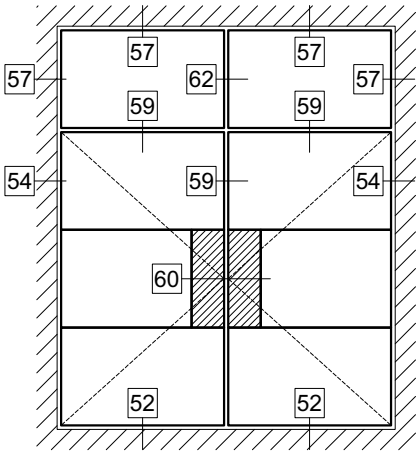
57
57
57
57
62
59
59
54
59
54
60
52
52

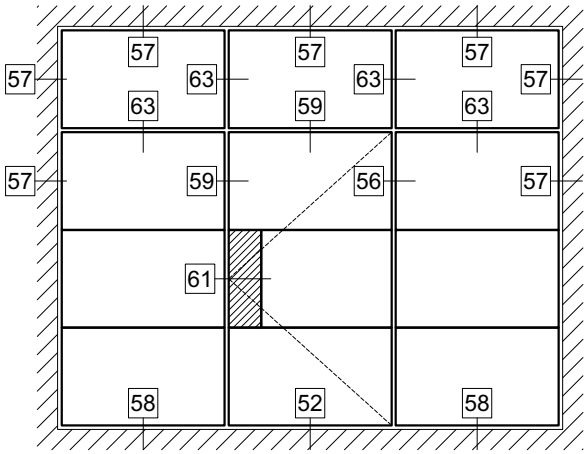
57
57
57
57
63
63
63
59
63
57
59
56
57
61
58
52
58

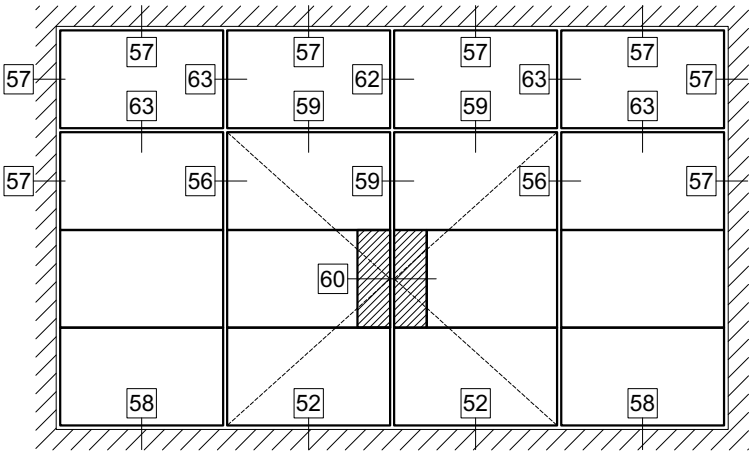
57
57
57
57
63
62
63
57
63
59
59
63
57
56
59
56
57
60
58
52
52
58

TYPE053

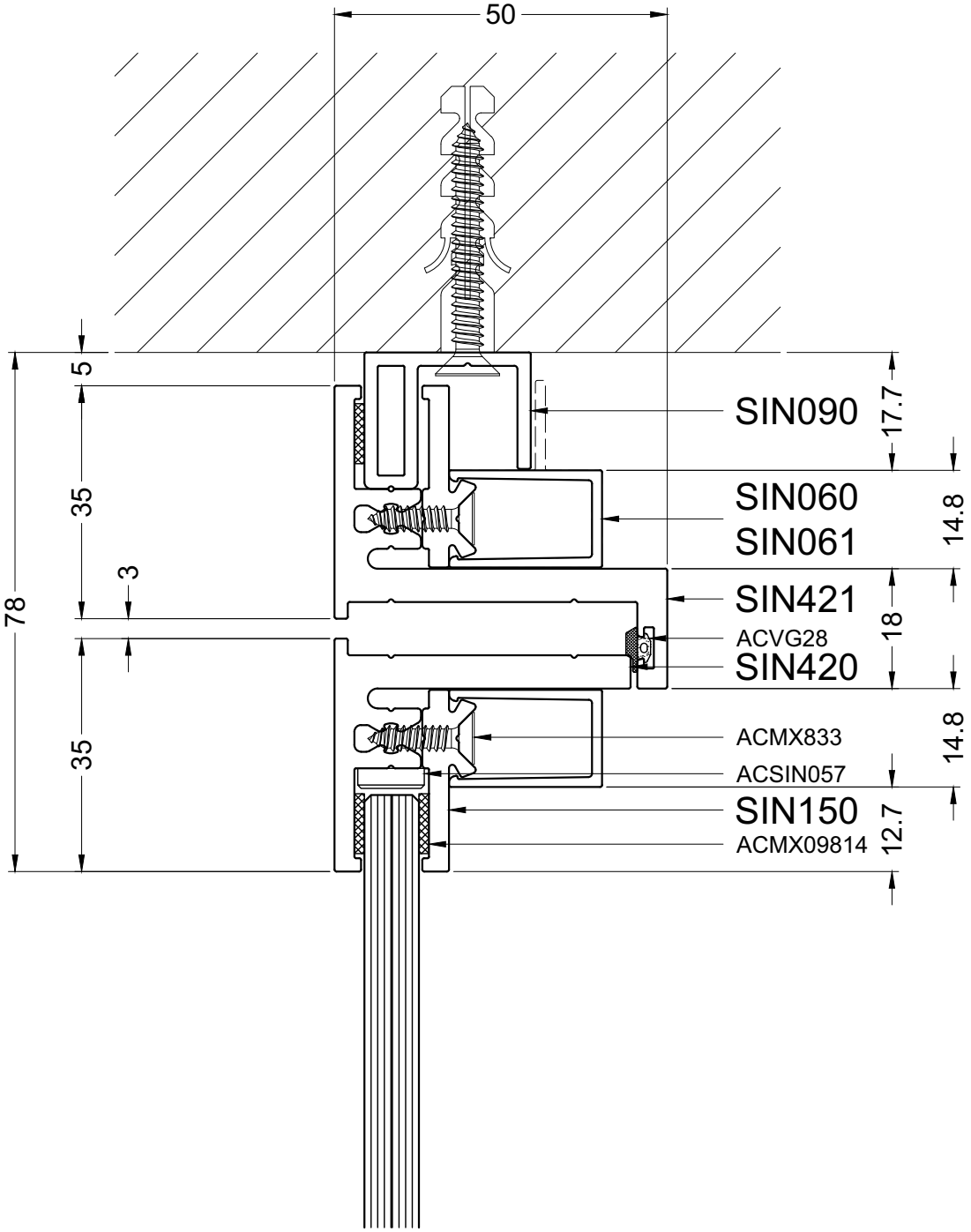


51-SIN090-SIN421-SIN420

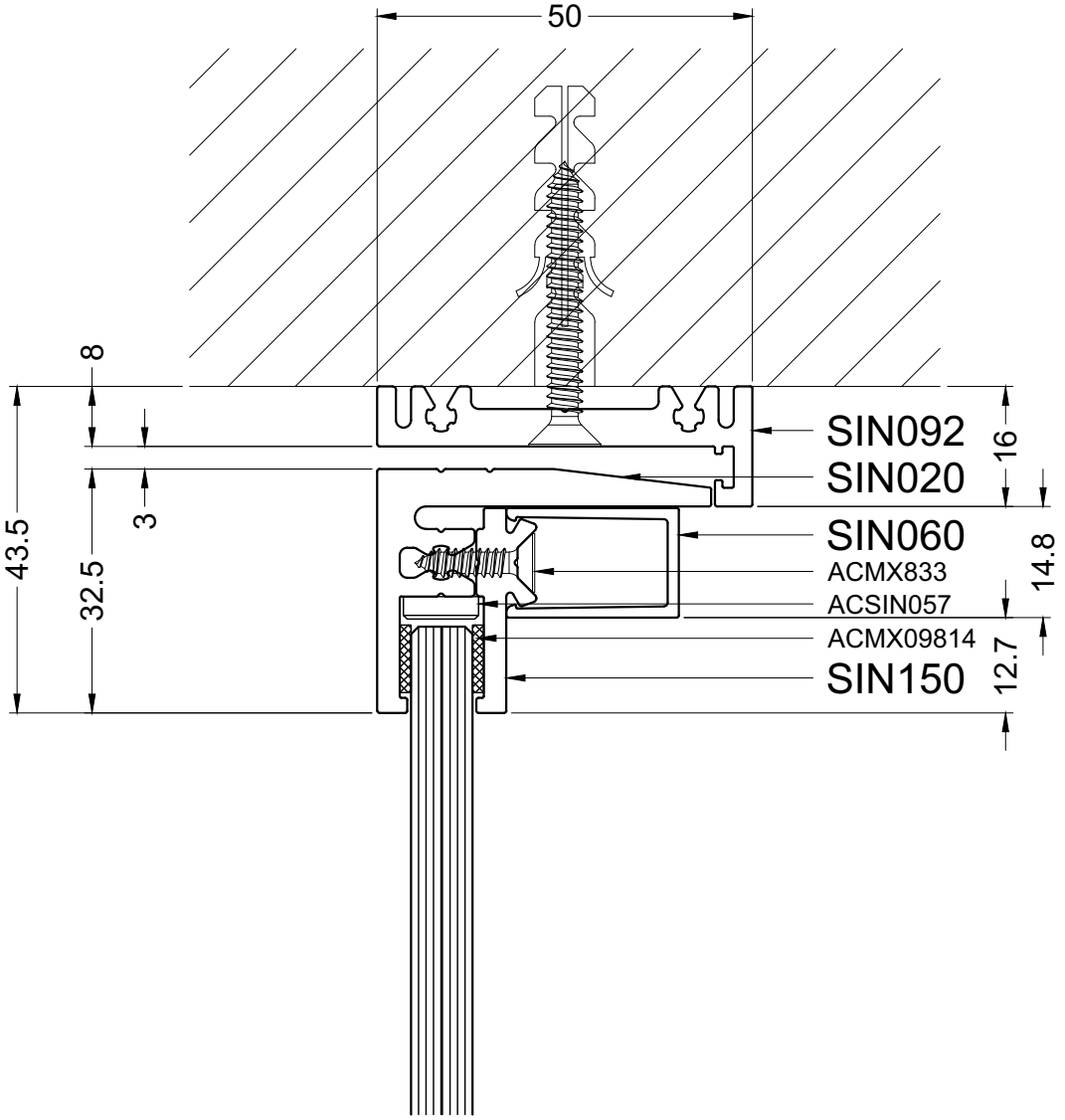


51-SIN092-SIN020

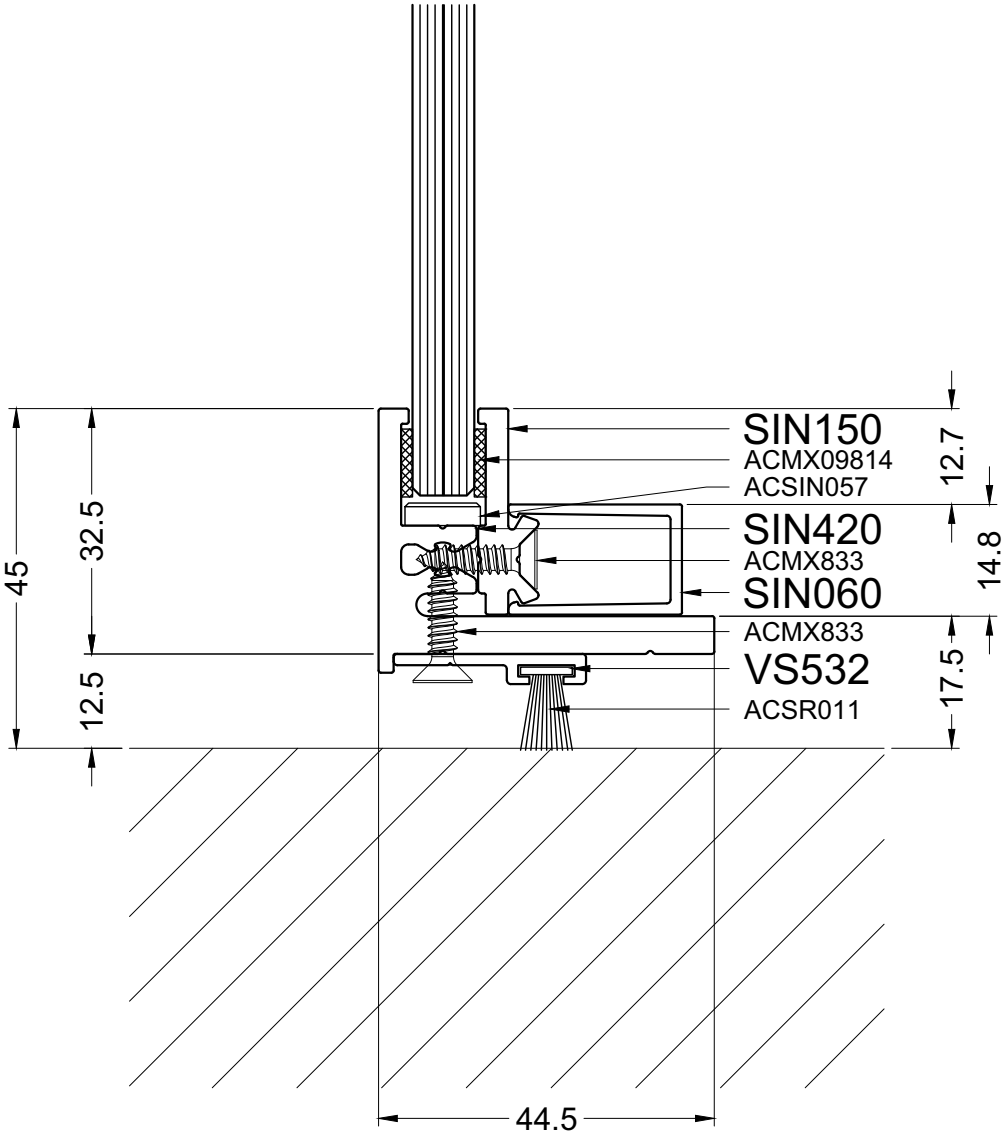


52-SIN090-SIN421-SIN420



aliplast
member of
CORIALIS

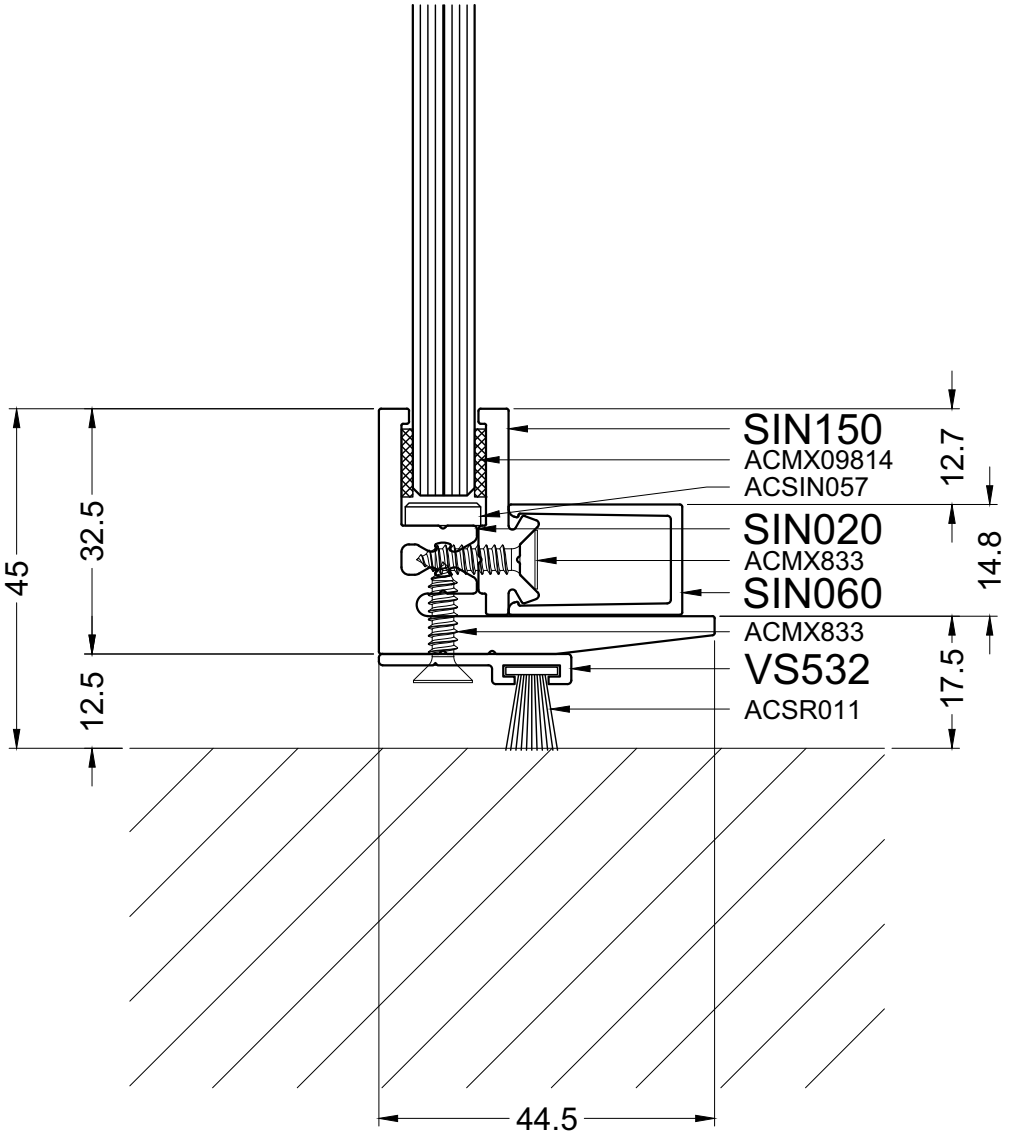


52-SIN090-SIN021-SIN020

# 52

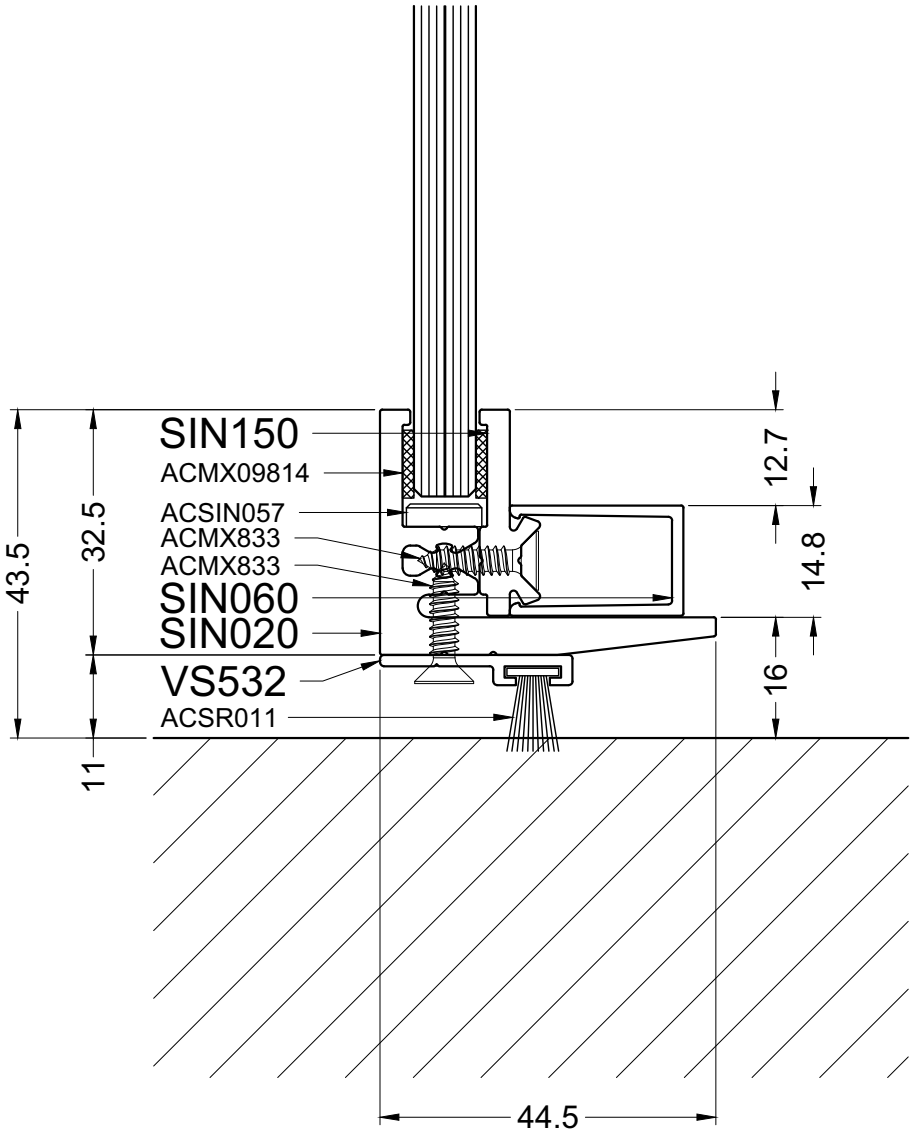


52-SIN092-SIN020



aliplast
member of
CORIALIS

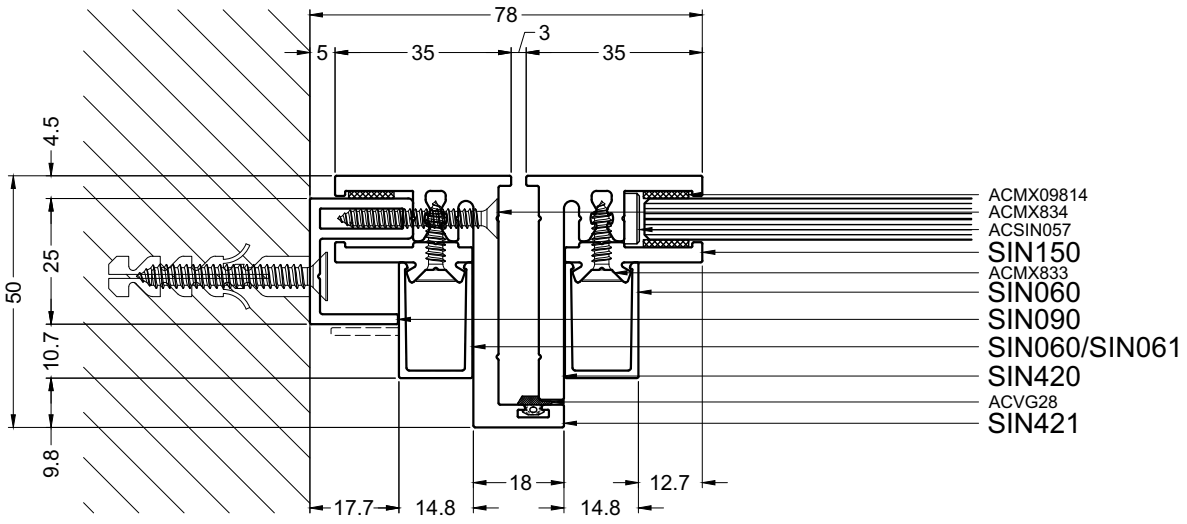


53-SIN090-SIN421-SIN420

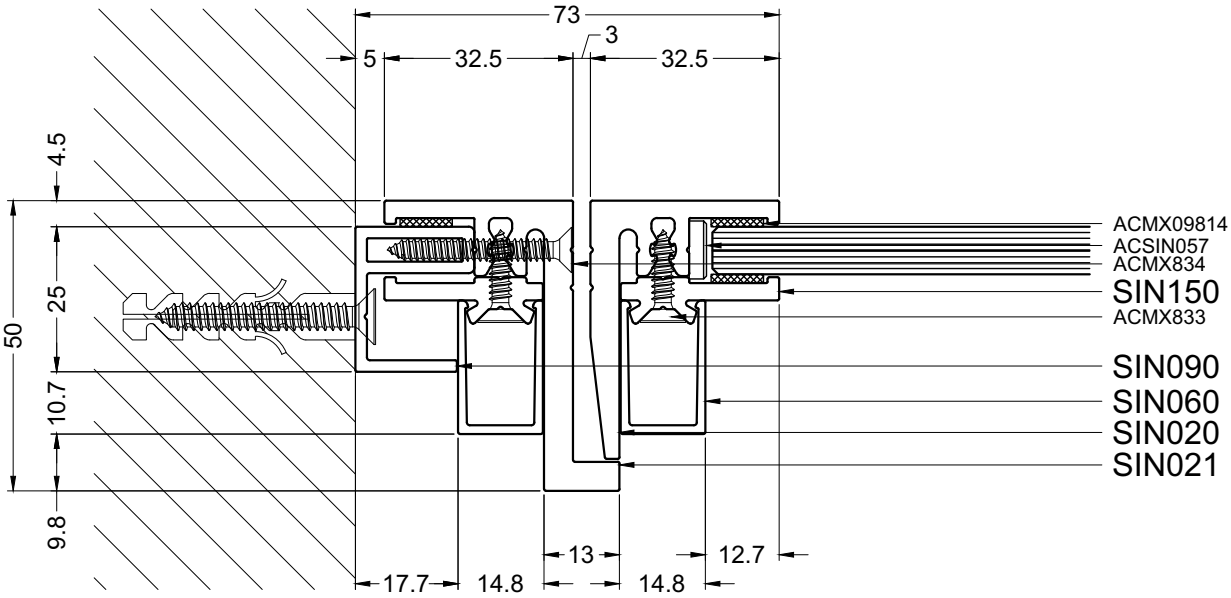


53-SIN090-SIN021-SIN020

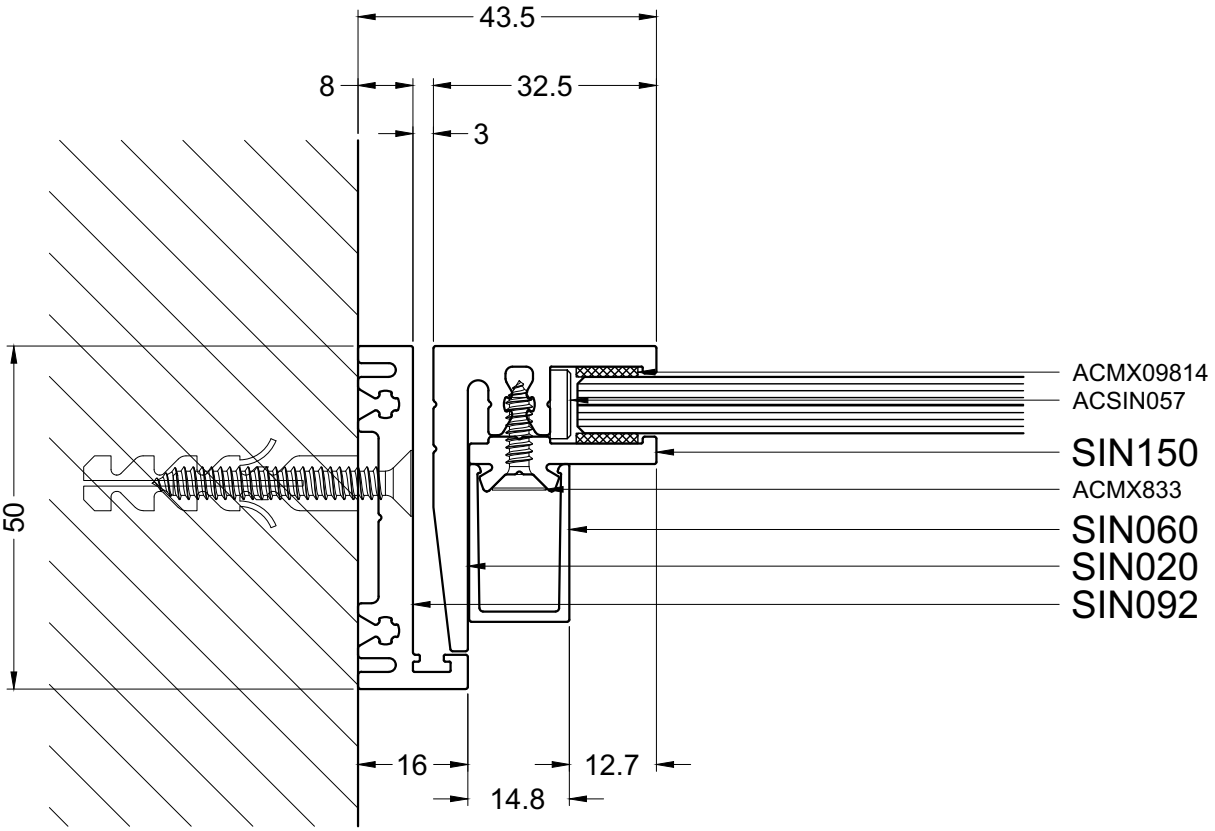


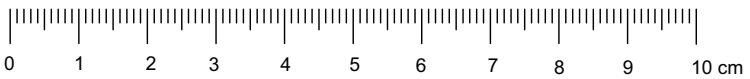


53-SIN092-SIN020

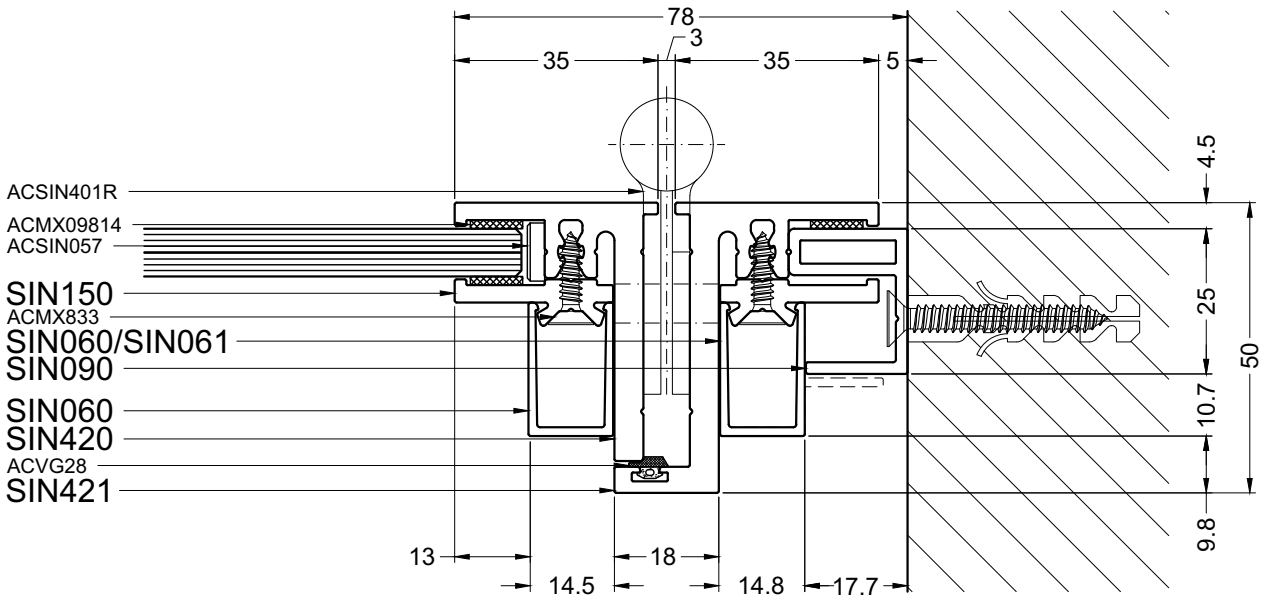


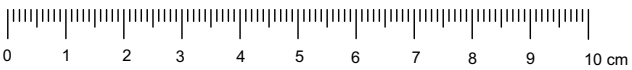


54-SIN090-SIN421-SIN420

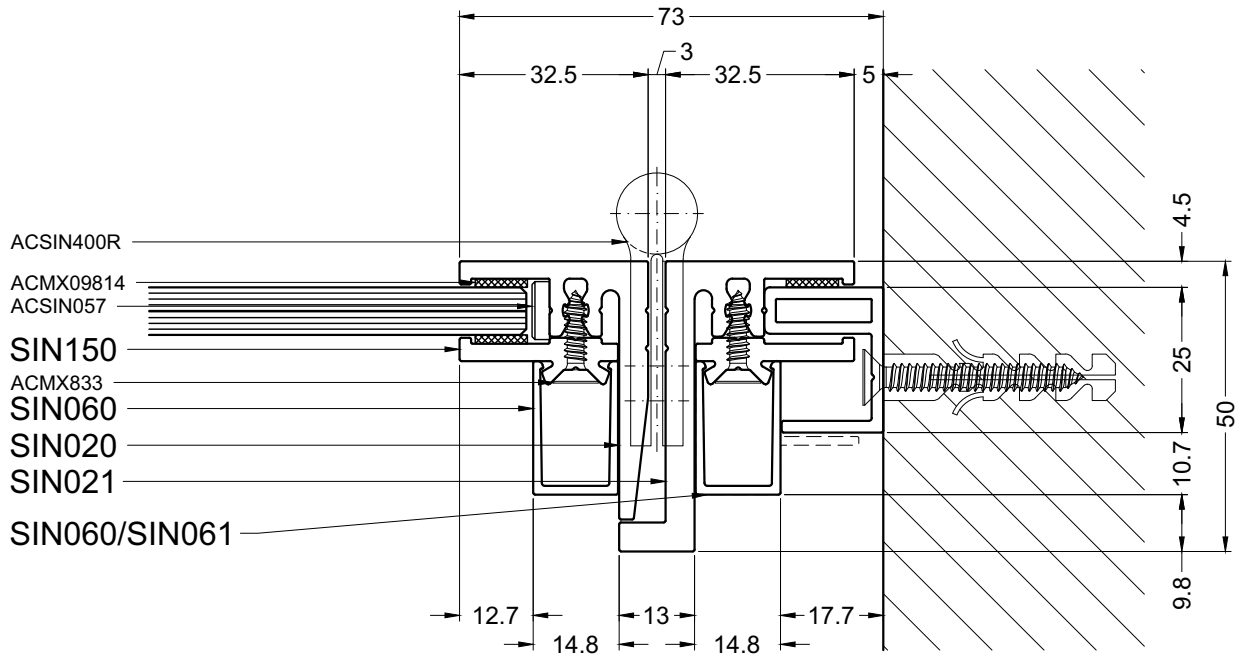


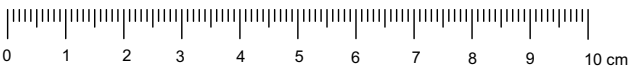


54-SIN090-SIN021-SIN020

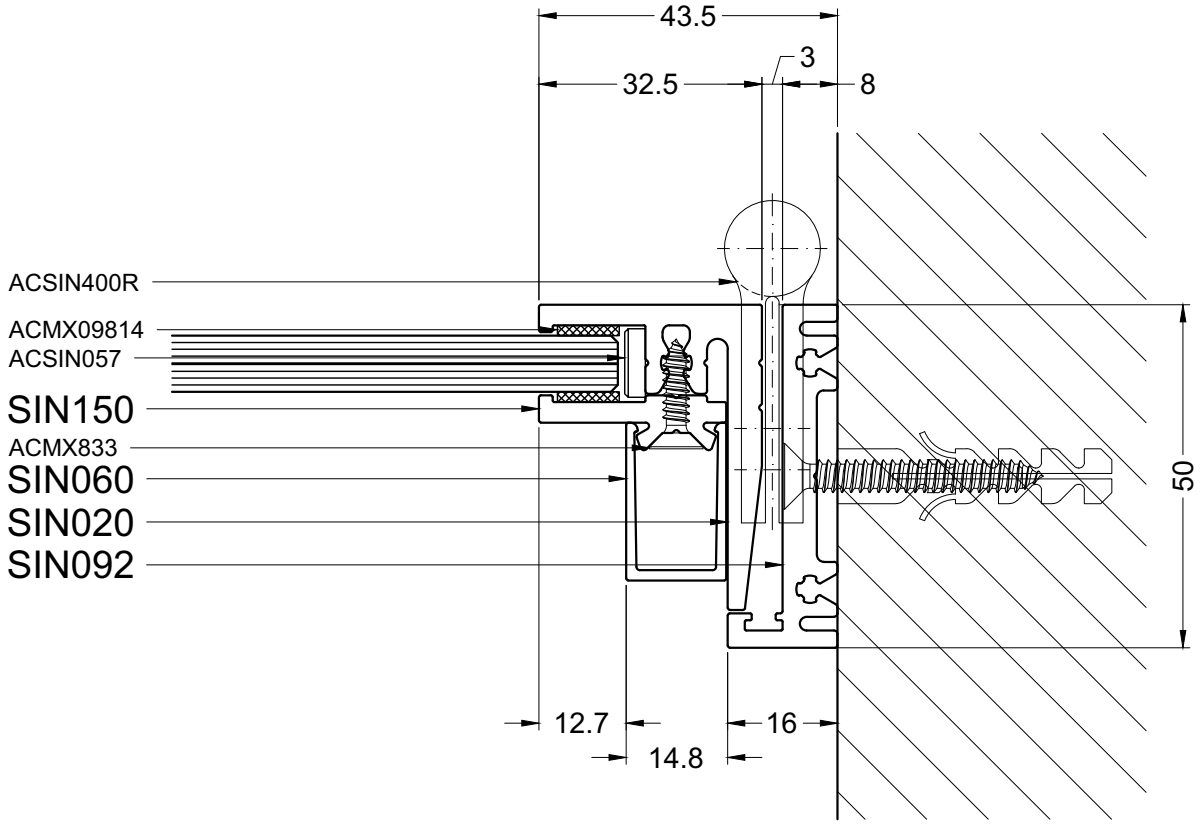


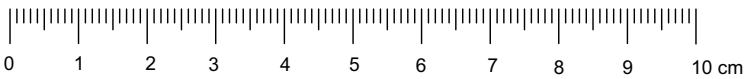


54-SIN092-SIN020

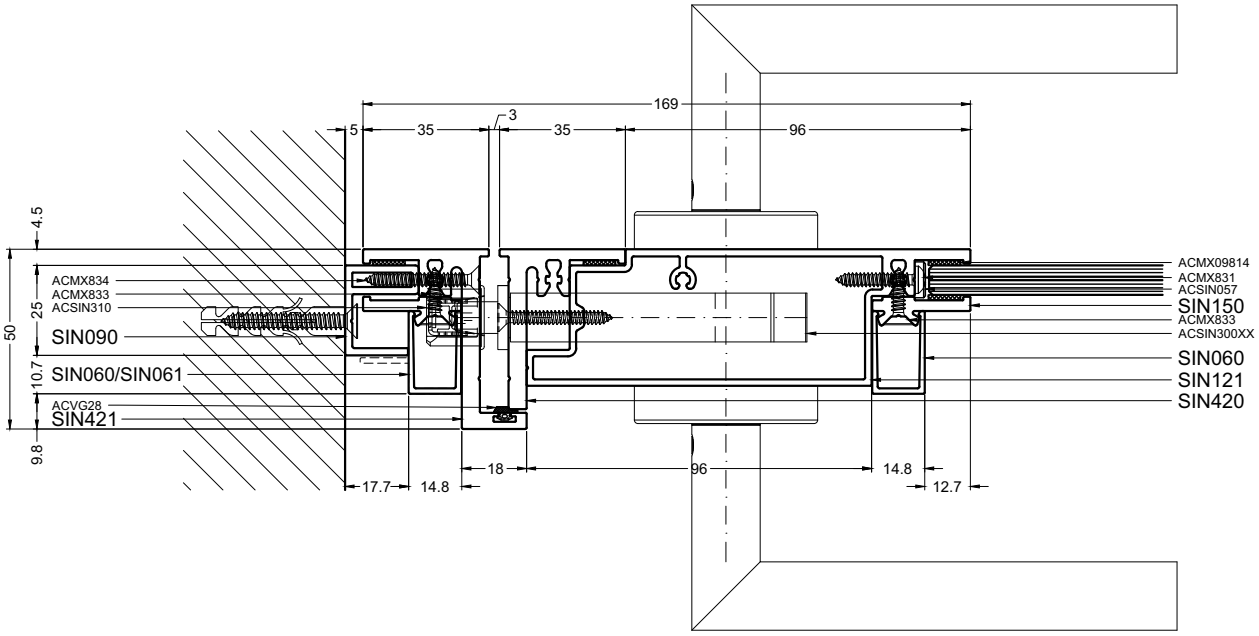


55-SIN090-SIN421-SIN420-SIN121

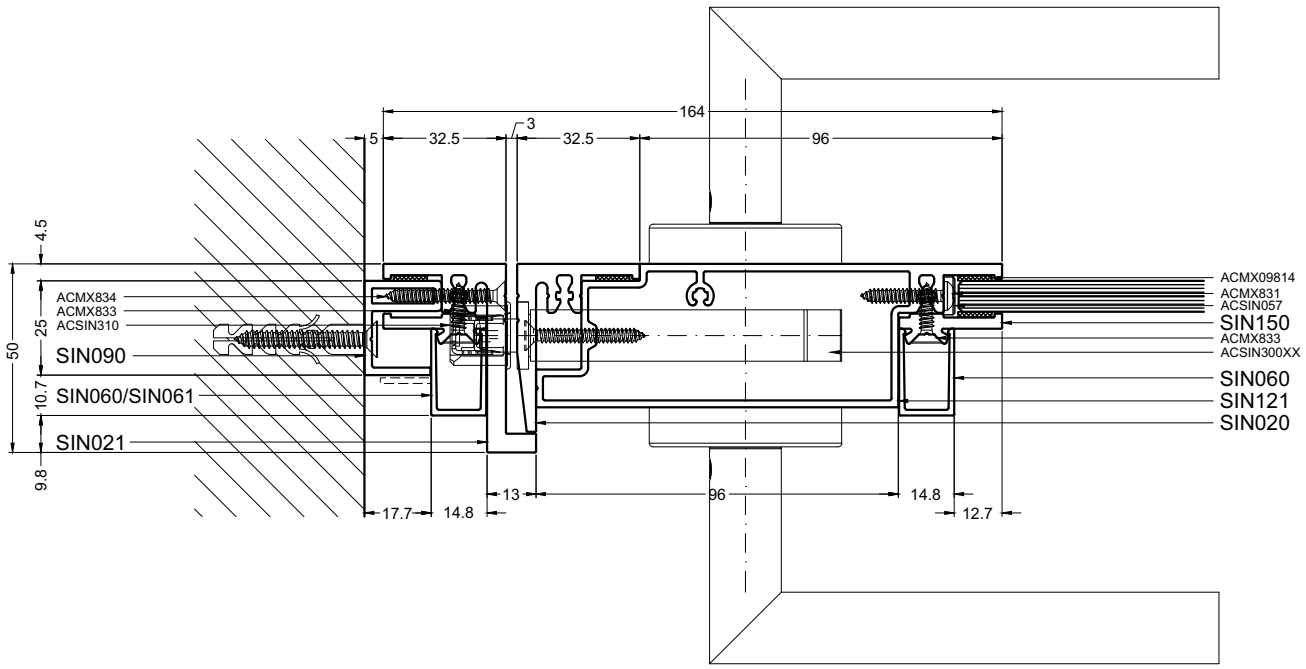


55-SIN090-SIN021-SIN020-SIN121

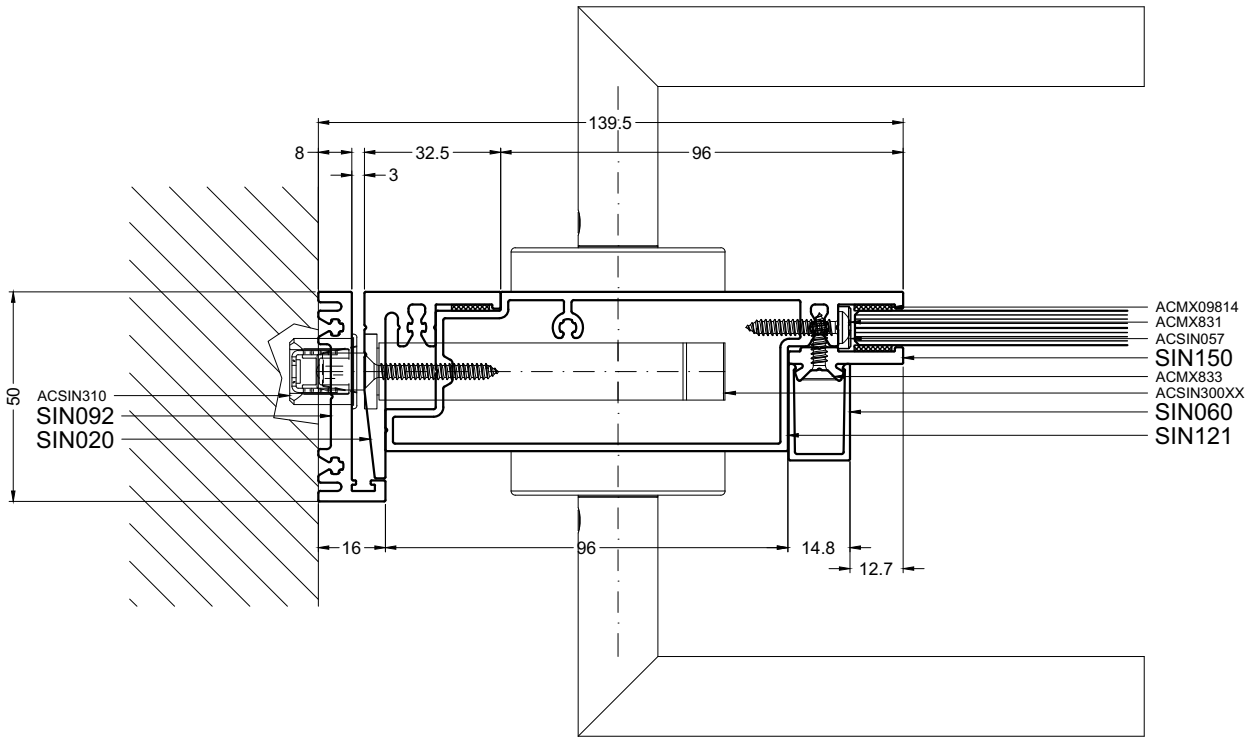


55-SIN092-SIN020-SIN121

# 55

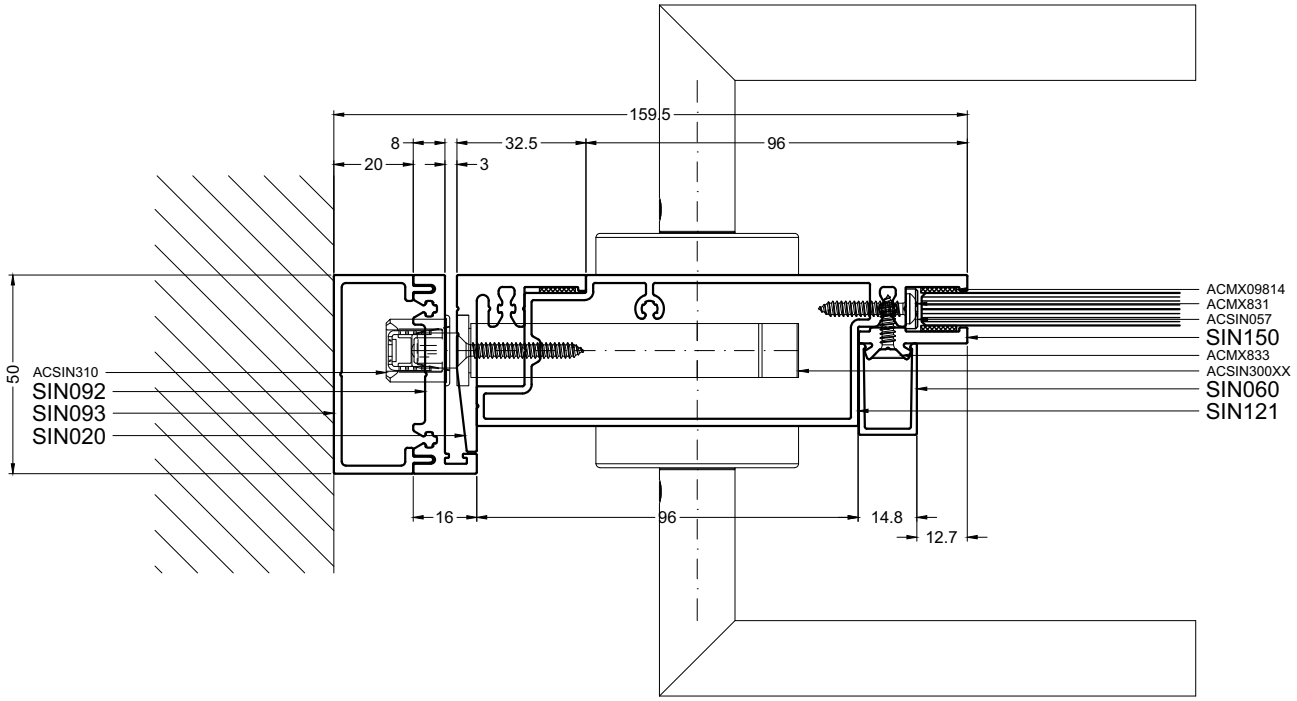


55-(SIN093)SIN092-SIN020-SIN121



aliplast
member of
CORIALIS

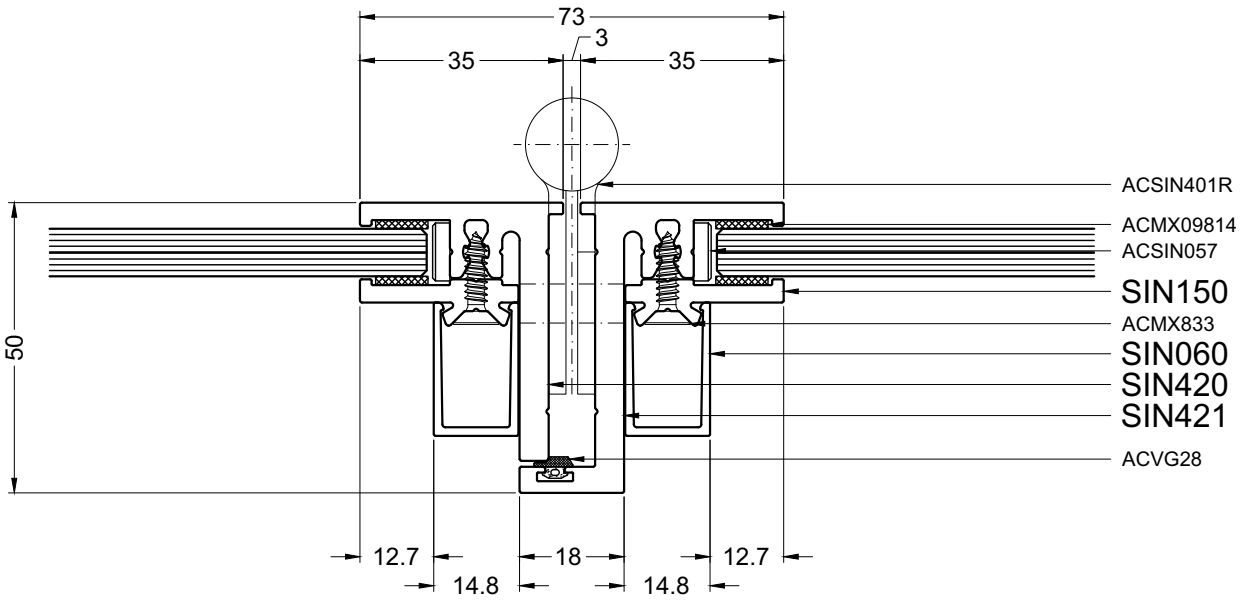


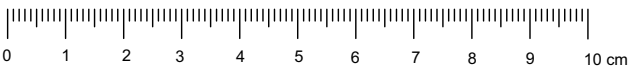


56-SIN420-SIN421

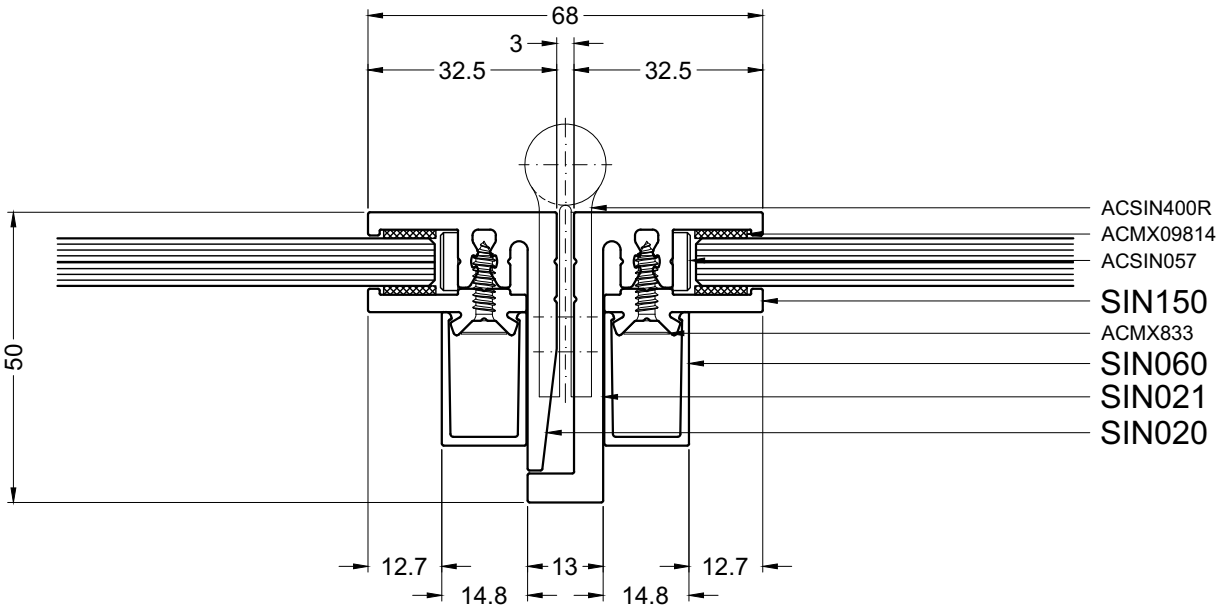


56-SIN020-SIN021

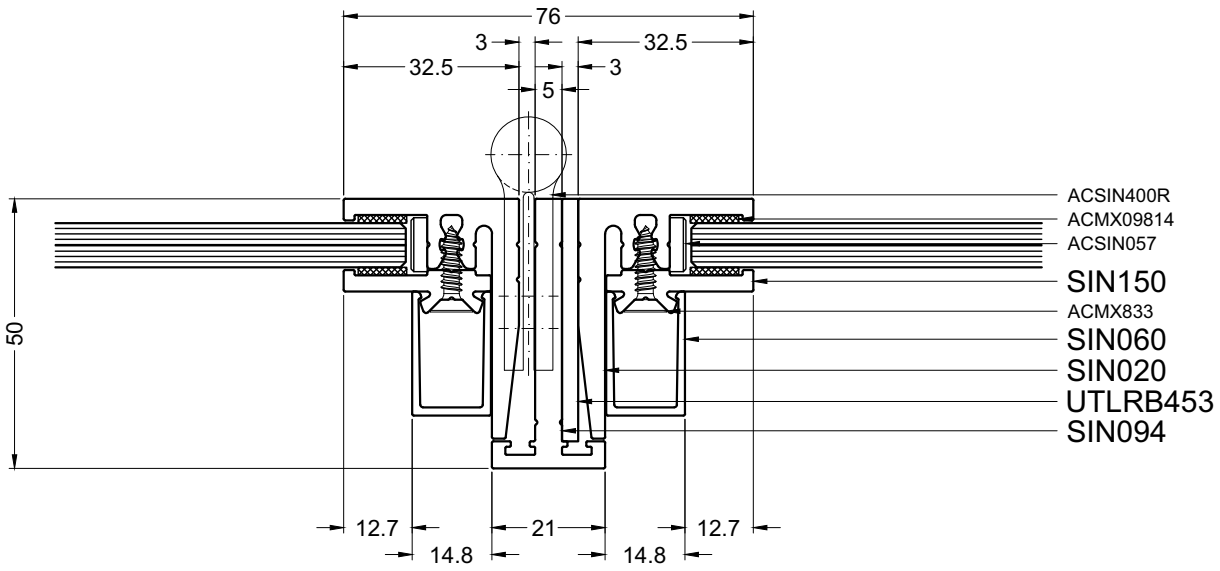


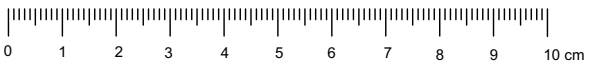


56-SIN020-SIN094-SIN020

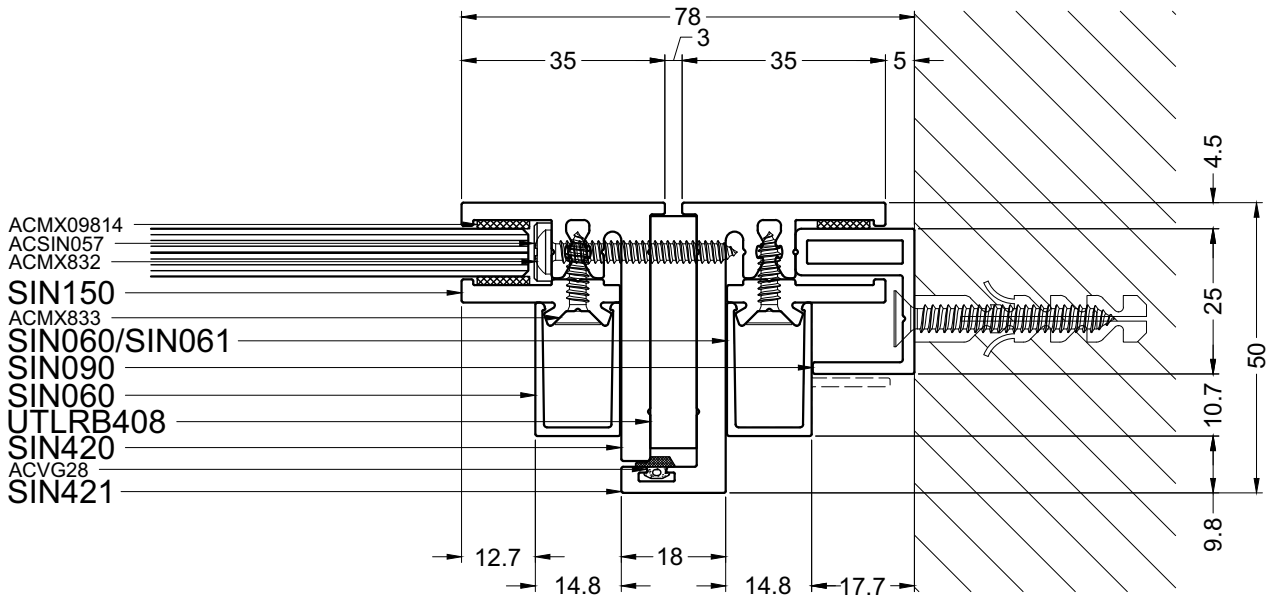


57-SIN090-SIN421-SIN420

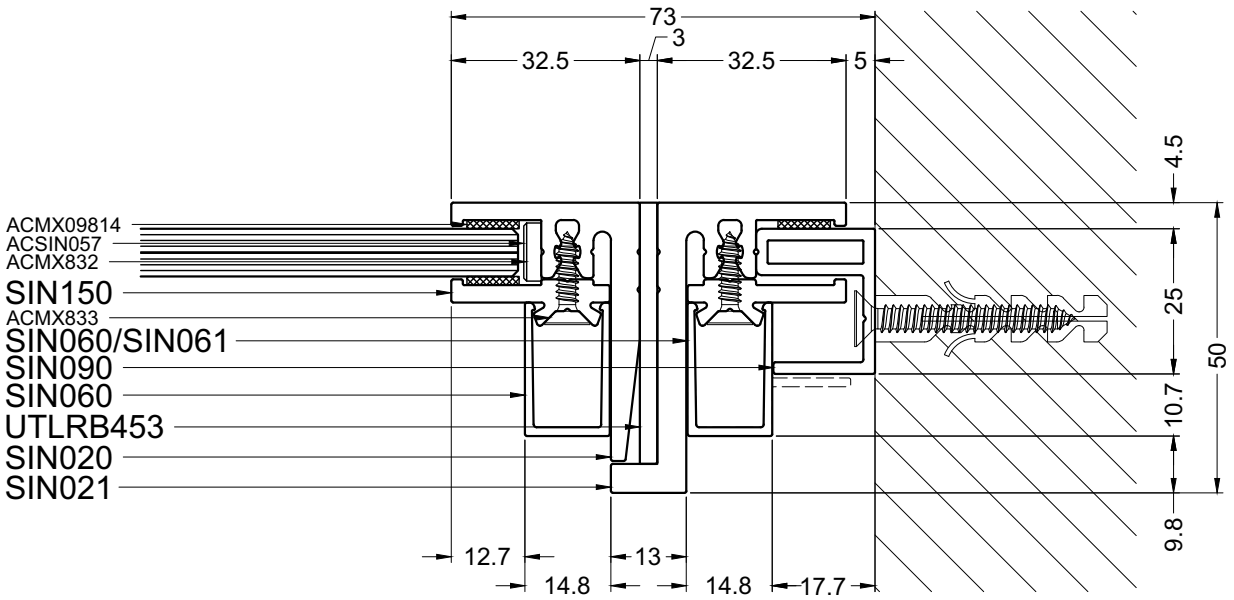


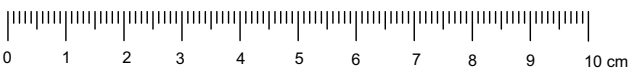


57-SIN090-SIN021-SIN020

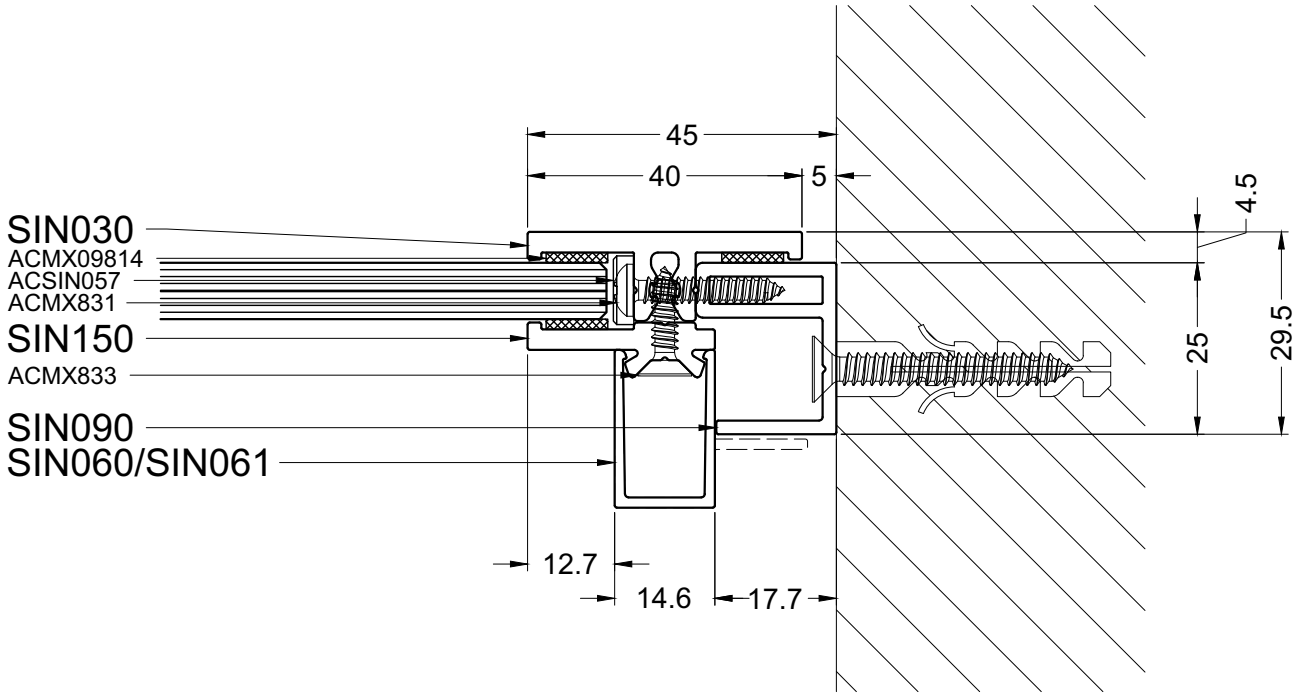


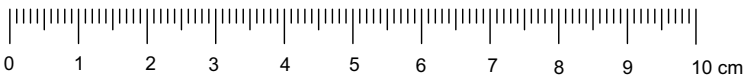


57-SIN090-SIN030(SIN060)



aliplast
member of
CORIALIS

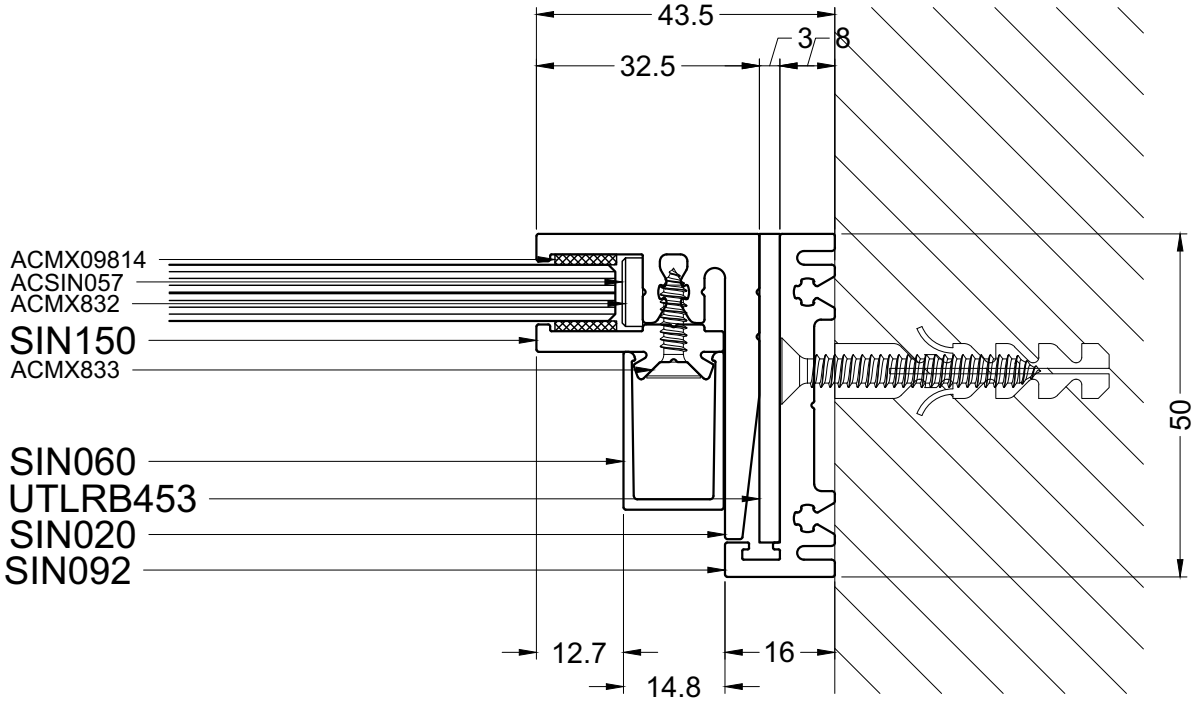


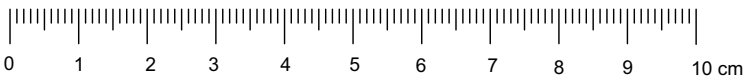


57-SIN092-SIN020

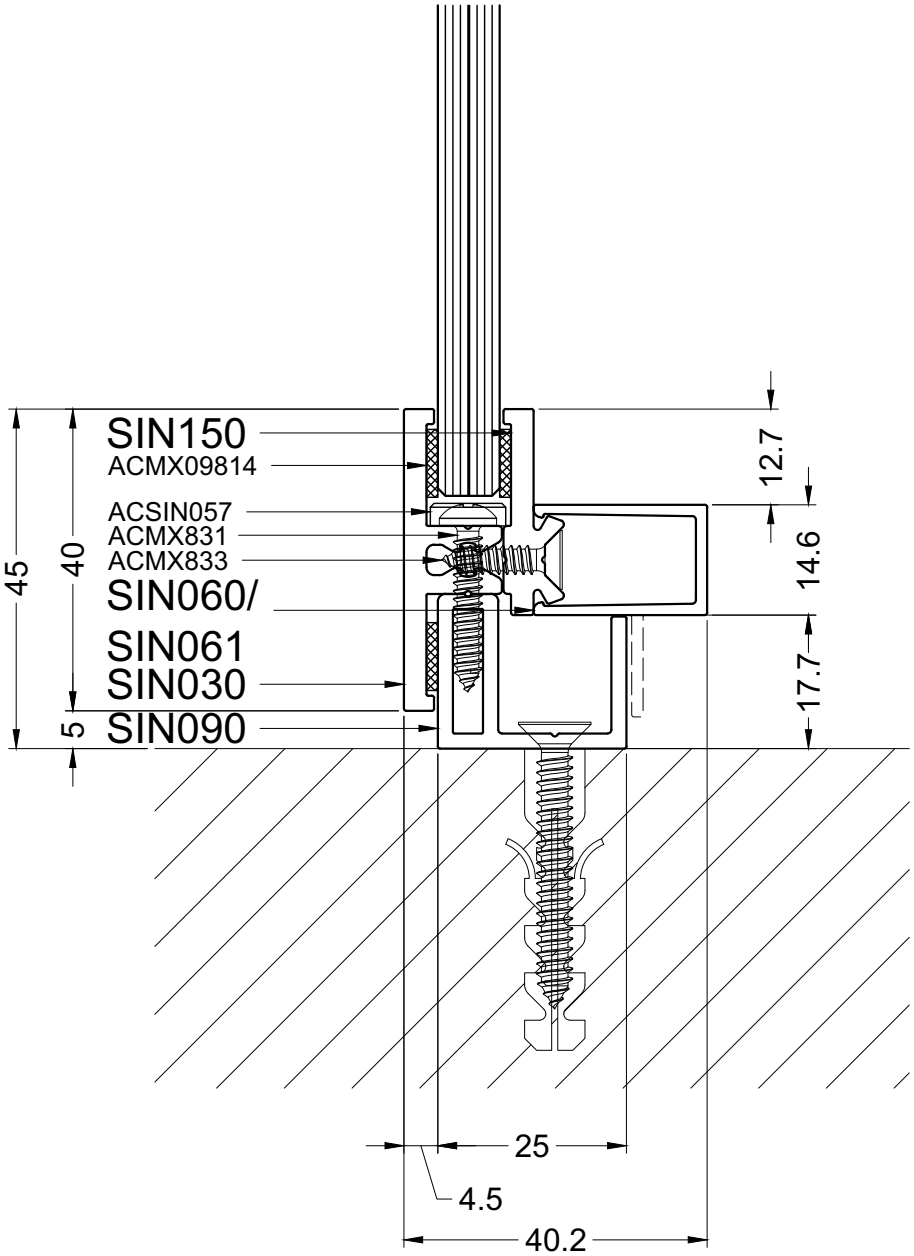


58-SIN090-SIN030



aliplast
member of
CORIALIS

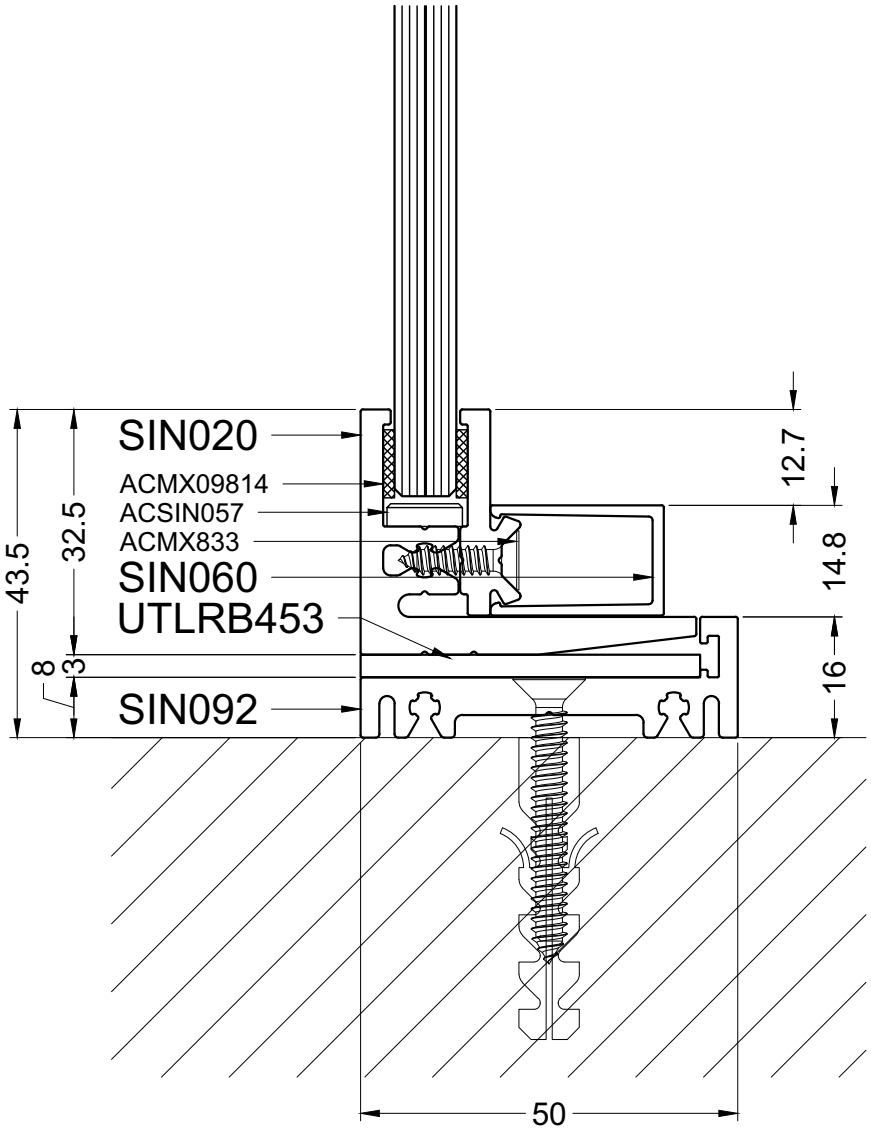


58-SIN092-SIN020

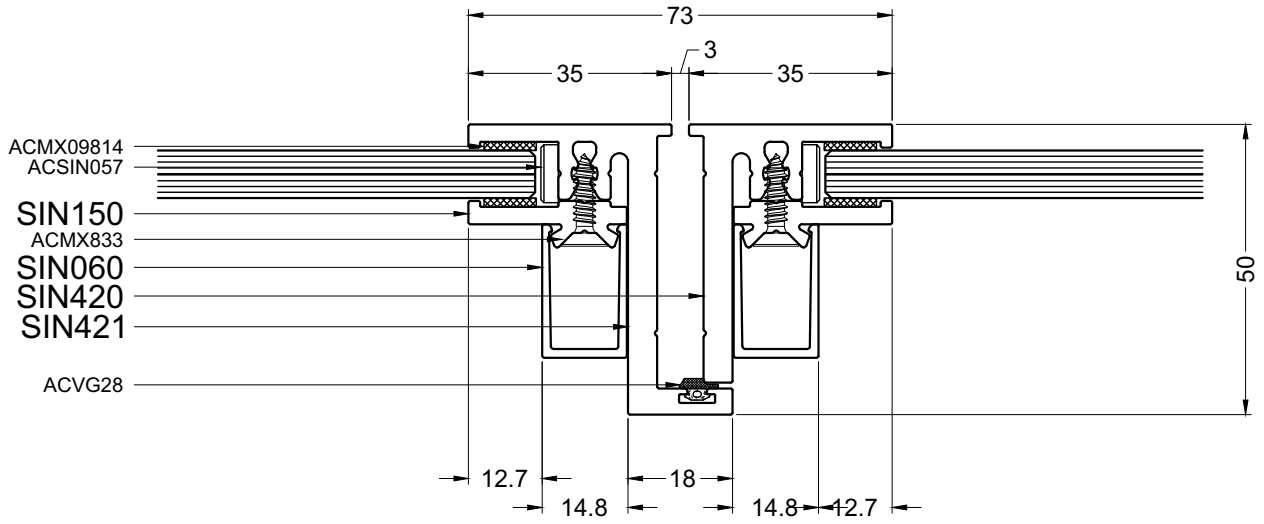


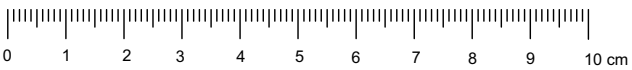


59-SIN421-SIN420

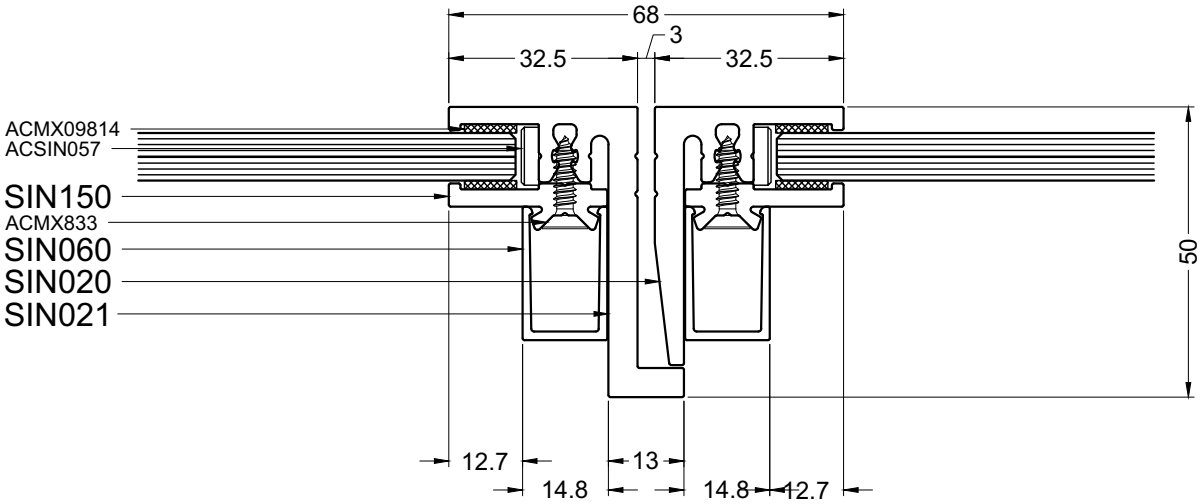


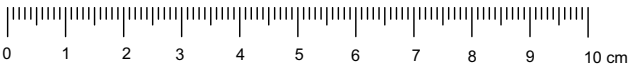


59-SIN021-SIN020

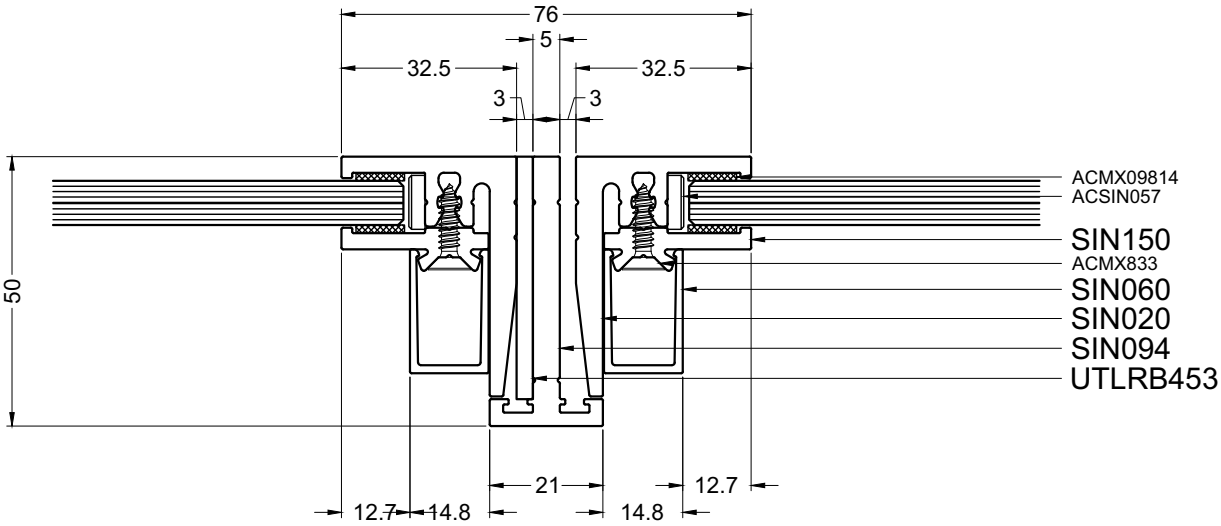


59-SIN020-SIN094-SIN020

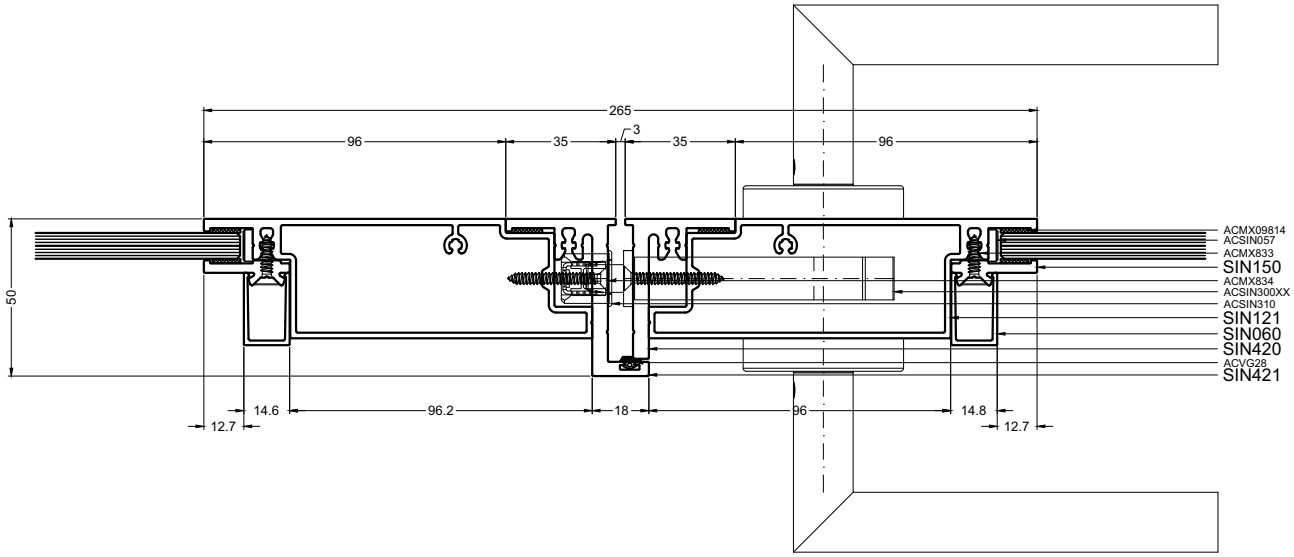


60-SIN121-SIN421-SIN420-SIN121

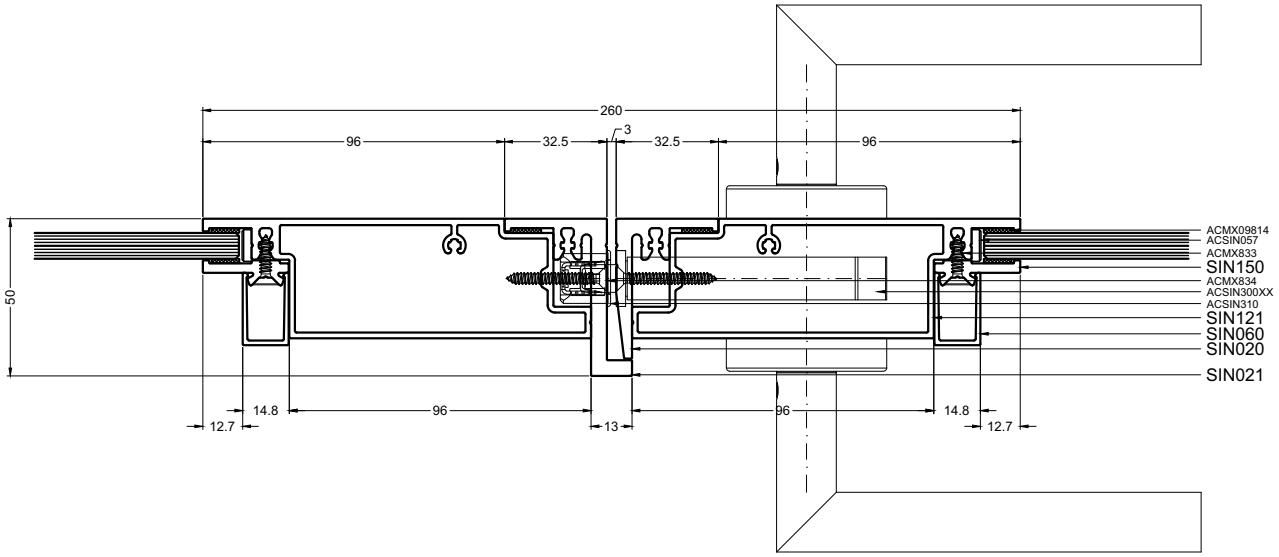


60-SIN121-SIN021-SIN020-SIN121

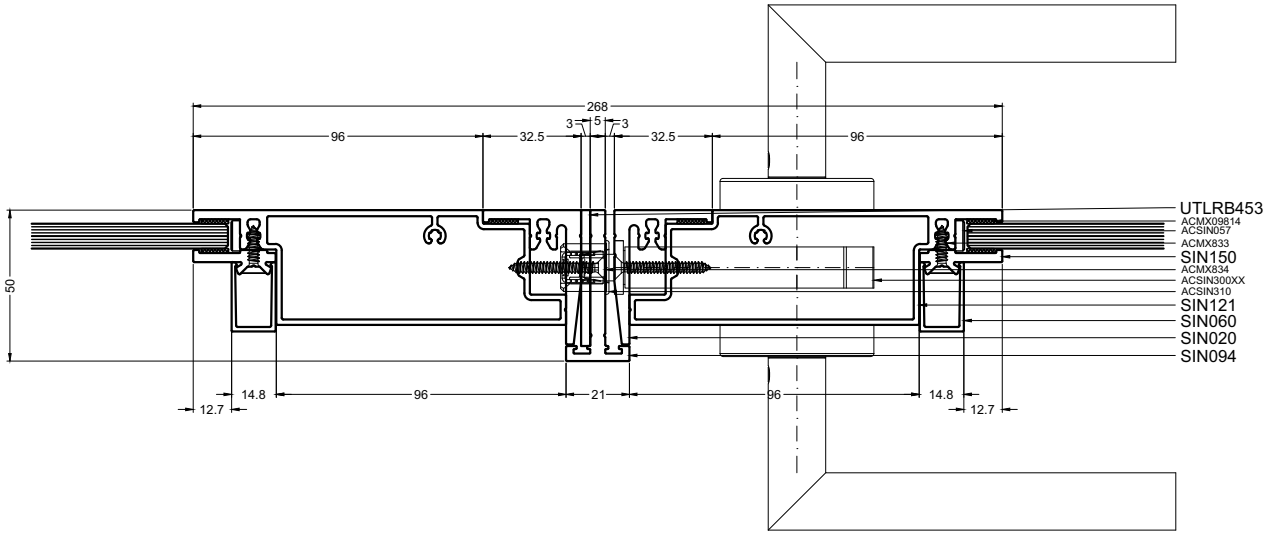


60-SIN121-SIN020-SIN094-SIN020-SIN121

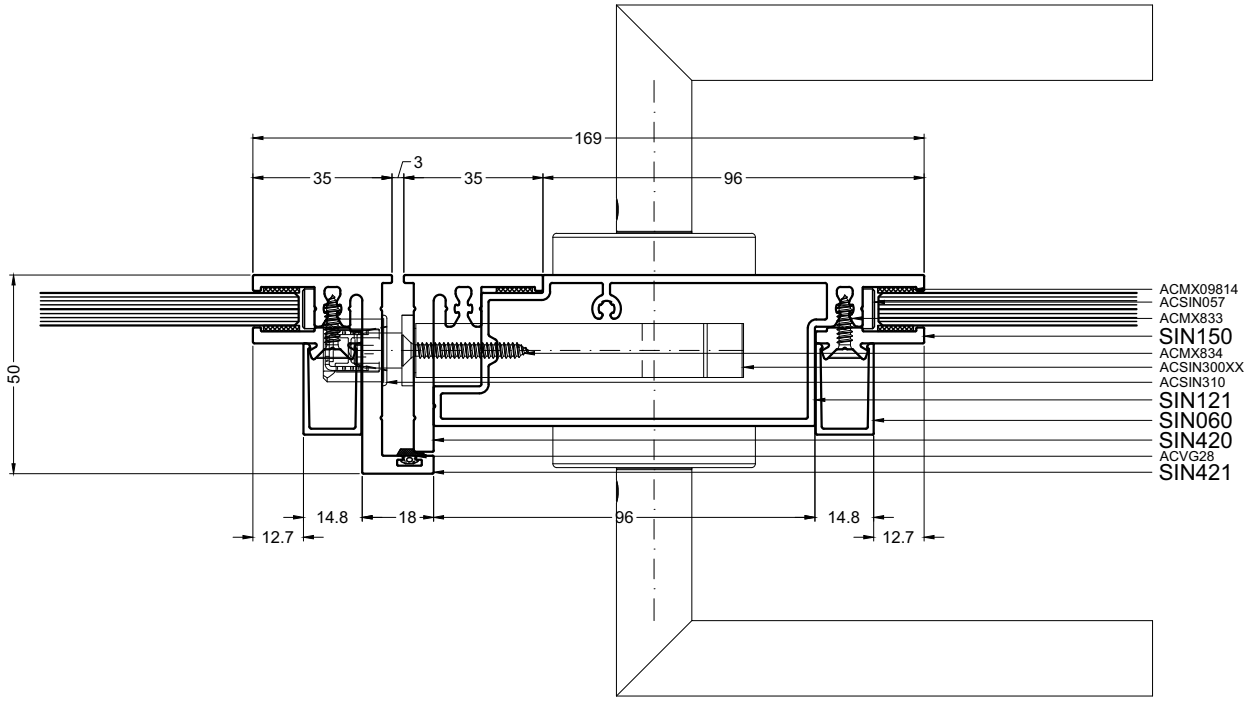


61-SIN421-SIN420-SIN121

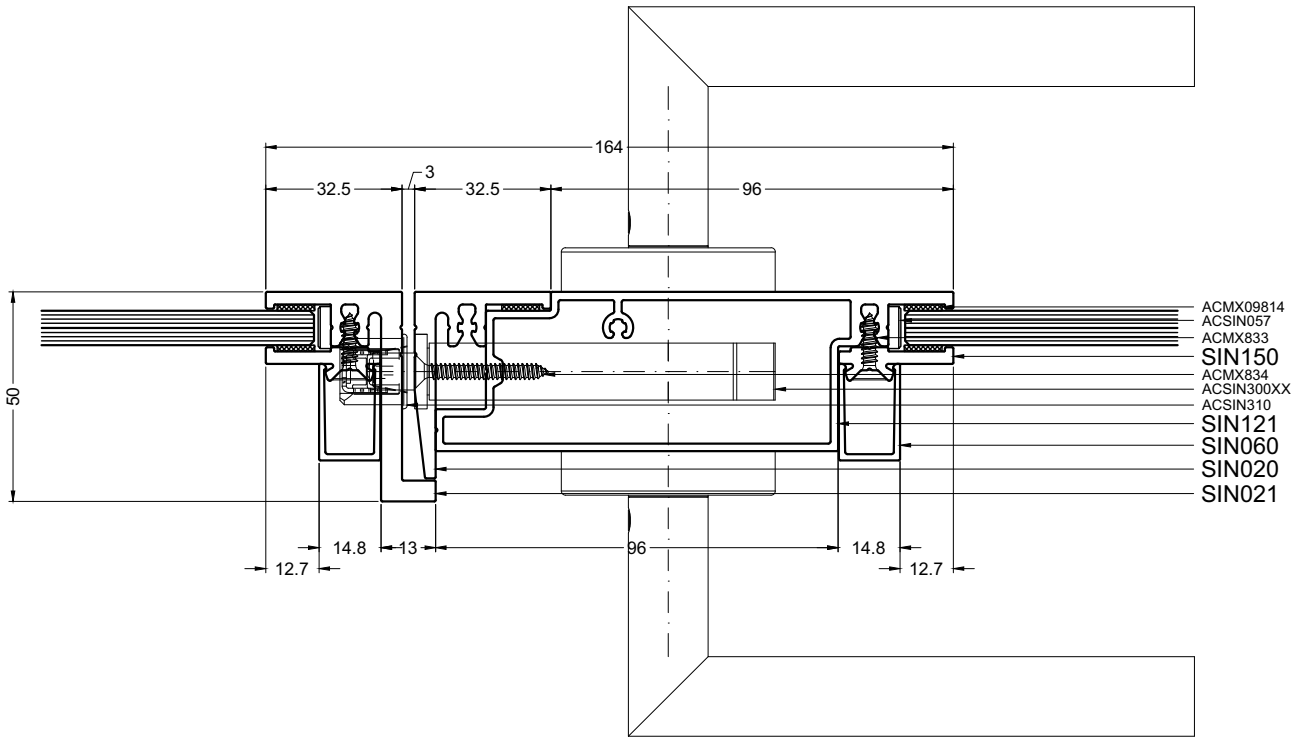


61-SIN021-SIN020-SIN121

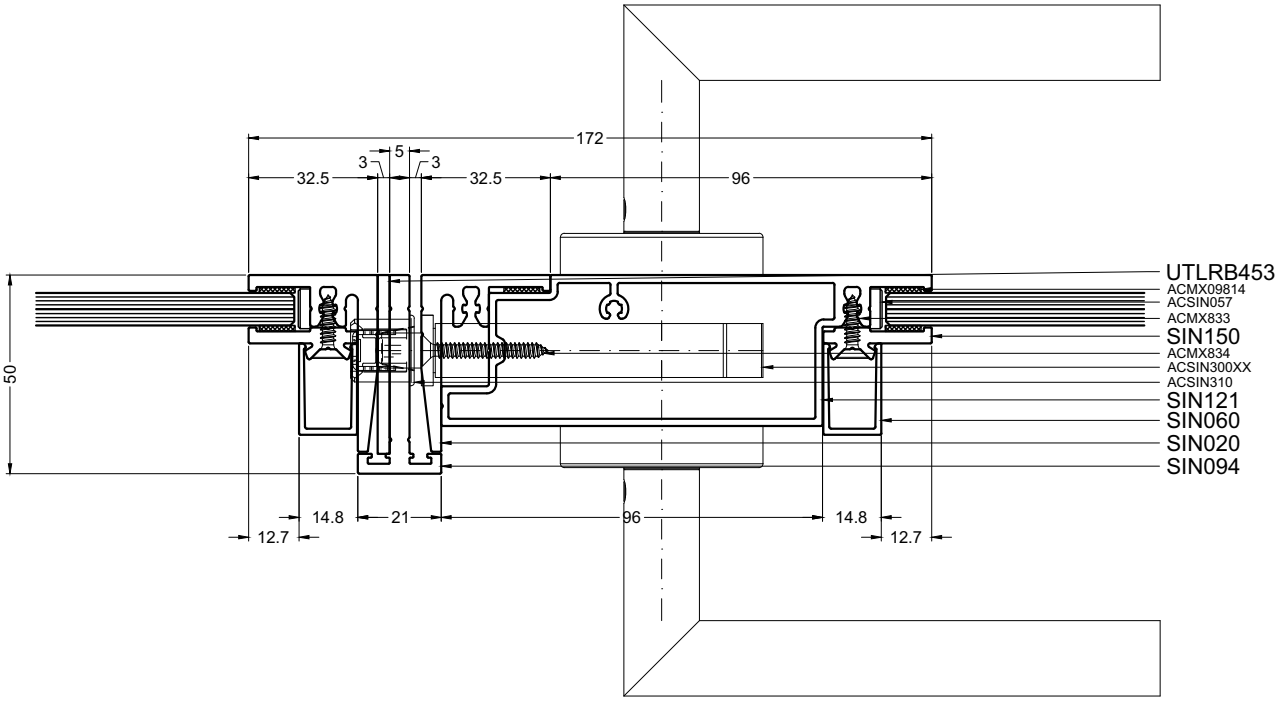


61-SIN020-SIN094-SIN020-SIN121

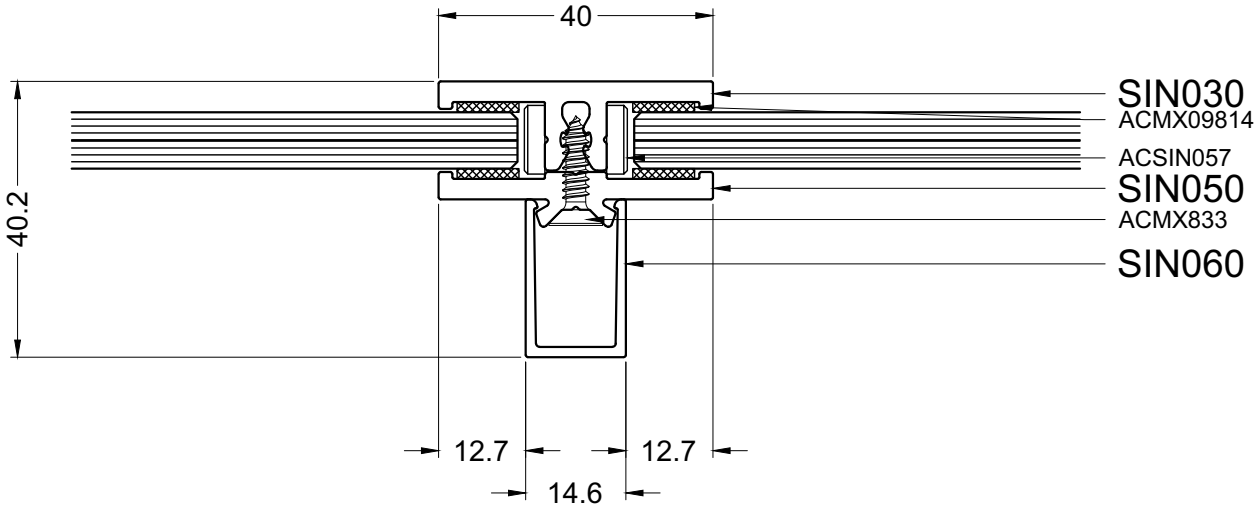
40
40.2
SIN030
ACMX09814
ACSIN057
SIN050
ACMX833
SIN060
12.7
12.7
14.6

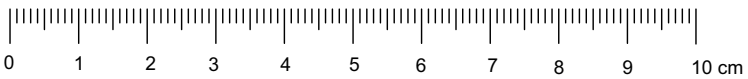
0
1
2
3
4
5
6
7
8
9
10 cm

62-SIN030

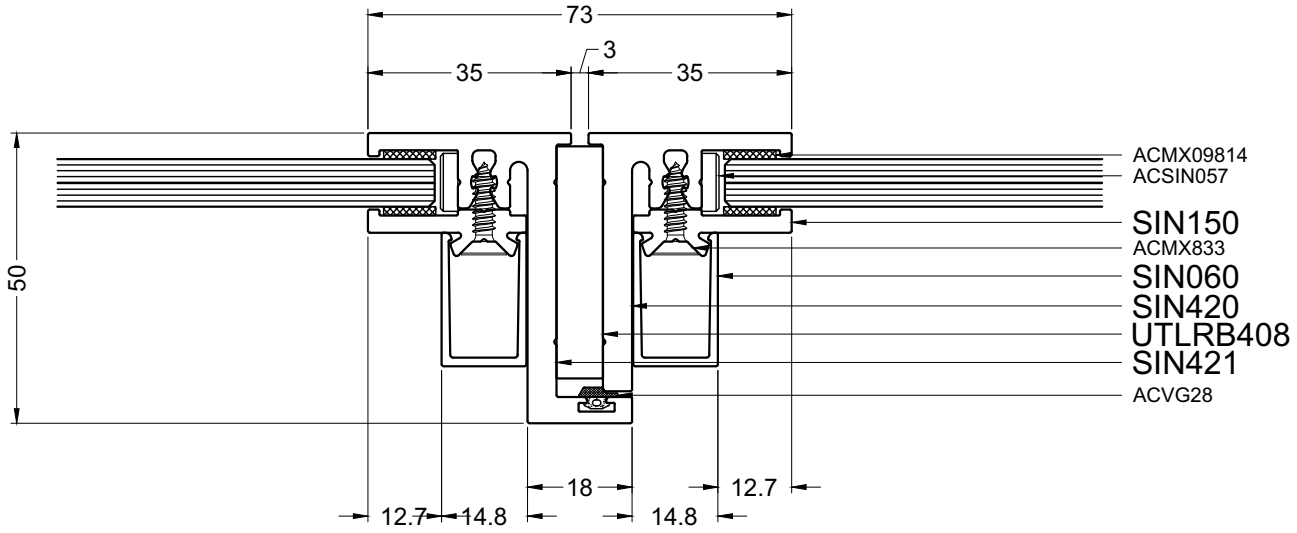


62-SIN421-SIN420

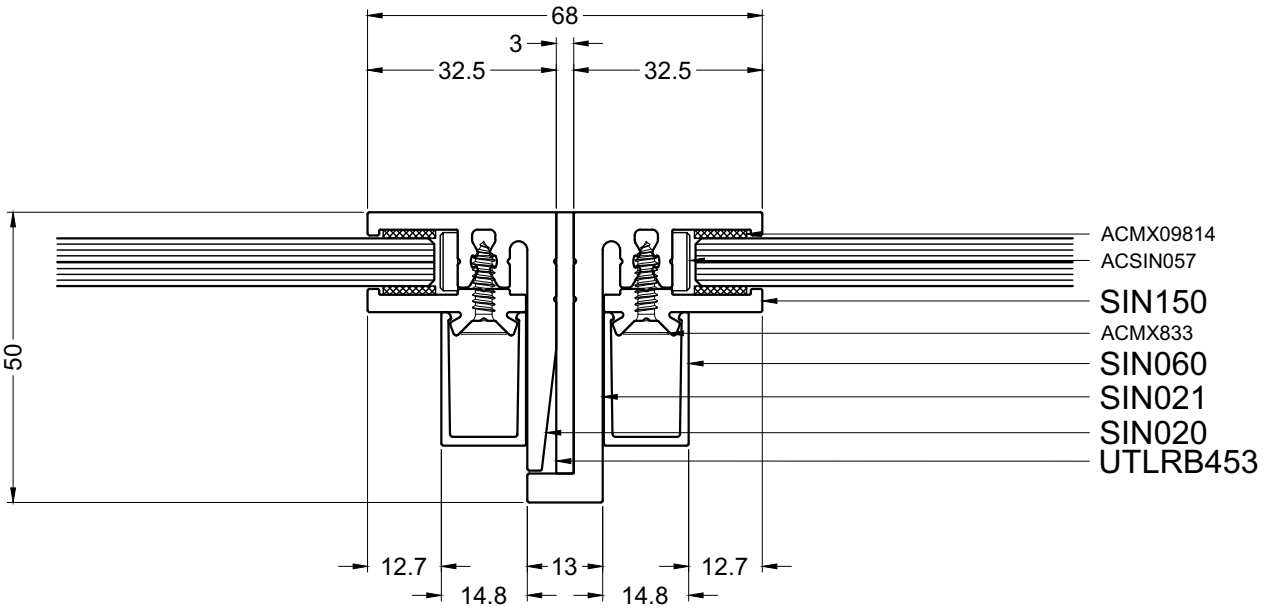


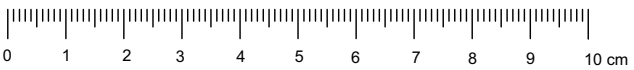


62-SIN020-SIN021

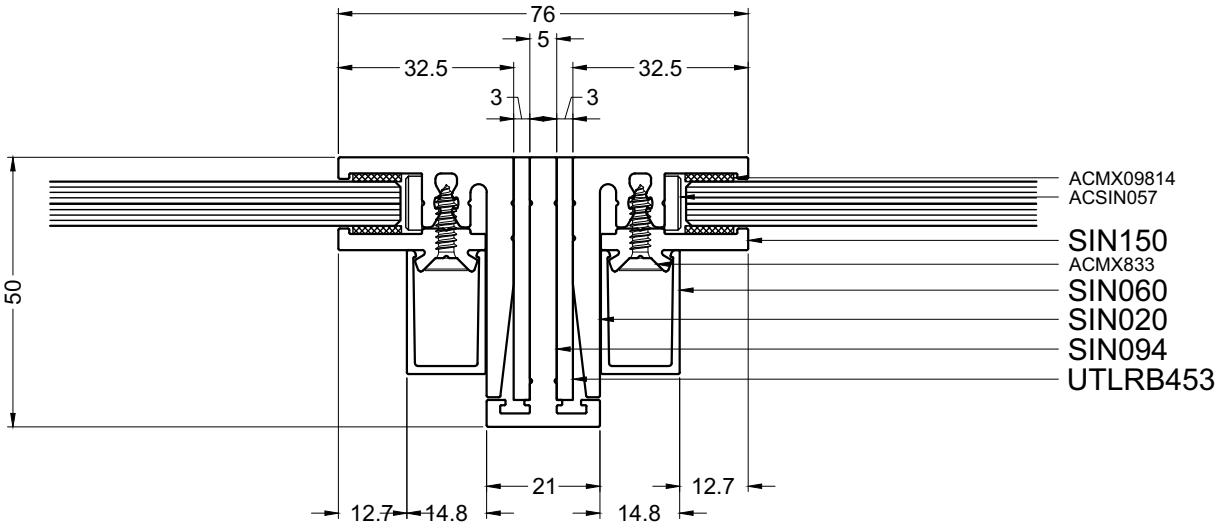


62-SIN020-SIN094-SIN020

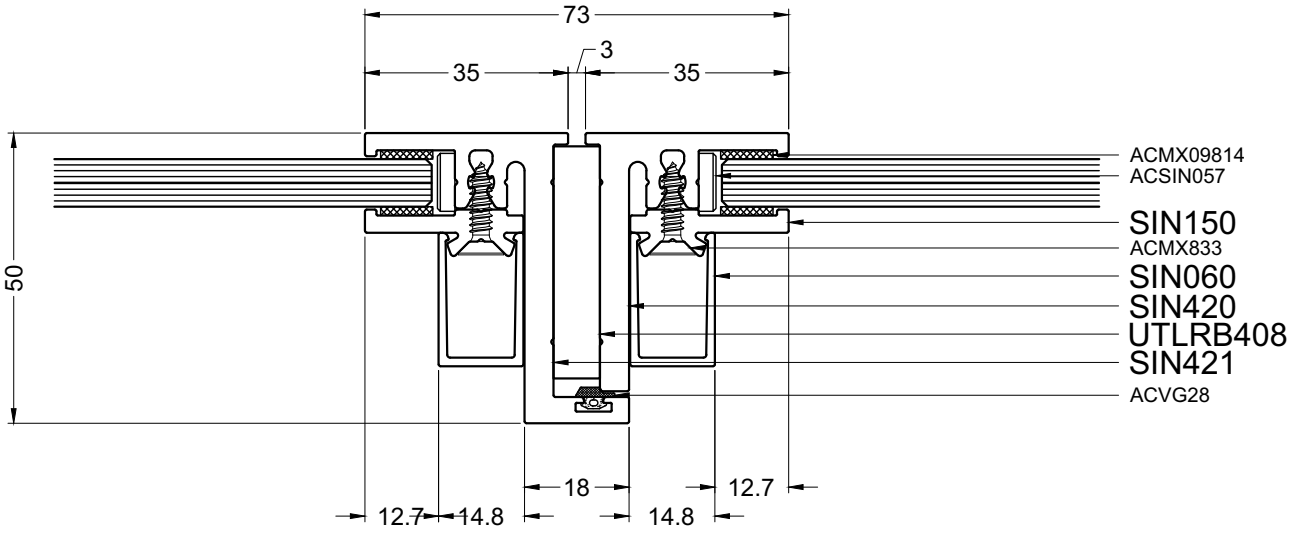


63-SIN421-SIN420

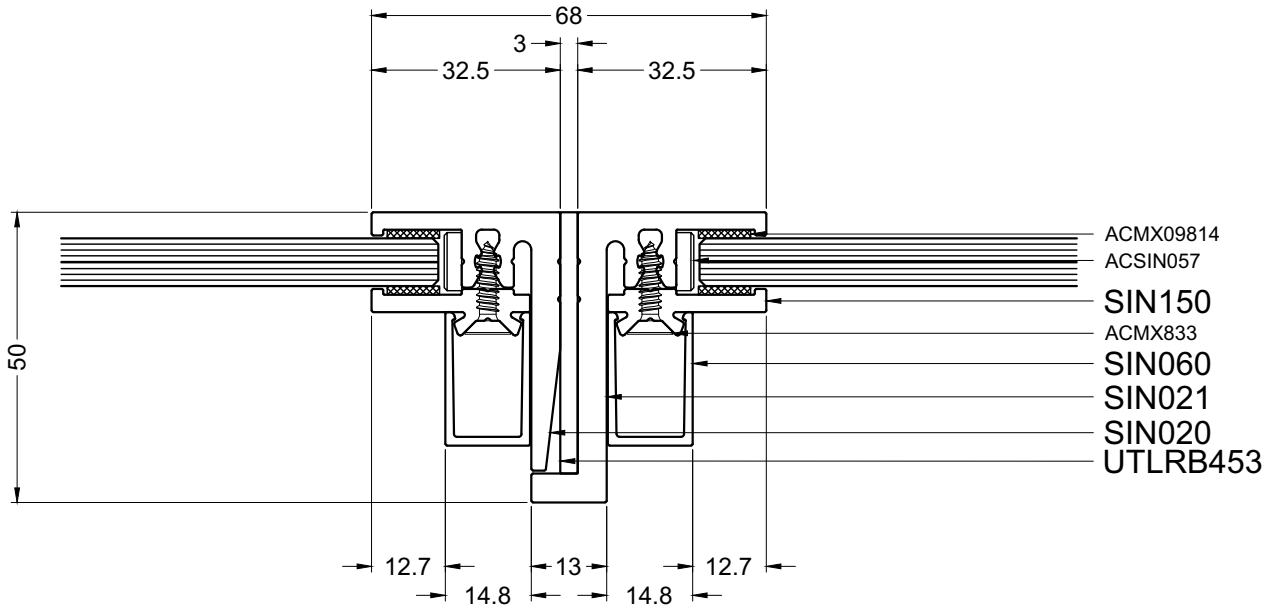


63-SIN020-SIN021

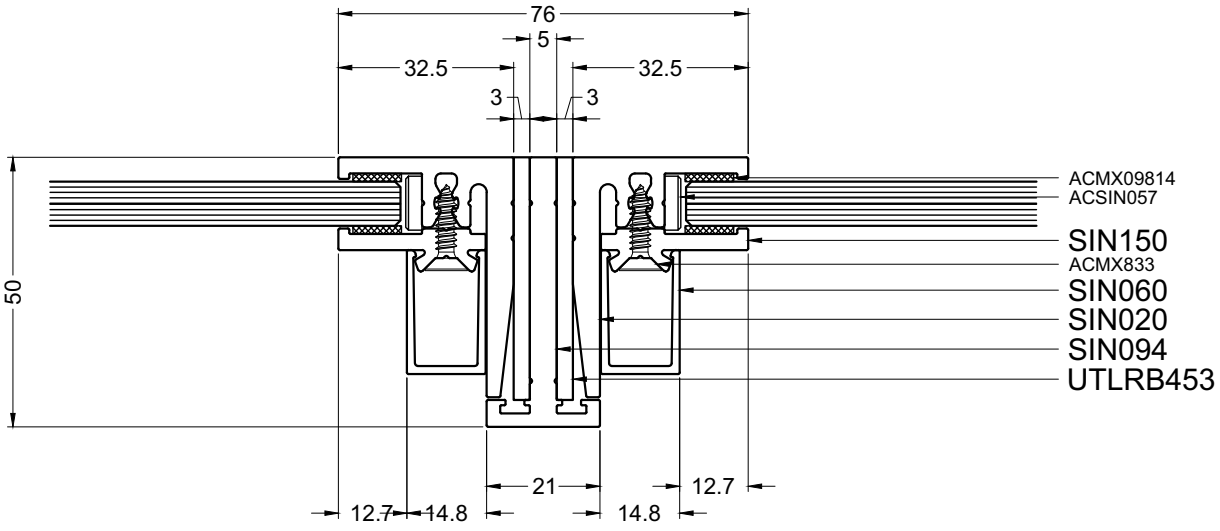


63-SIN020-SIN094-SIN020

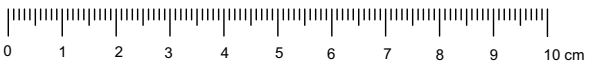

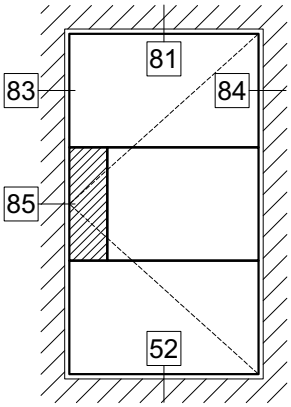


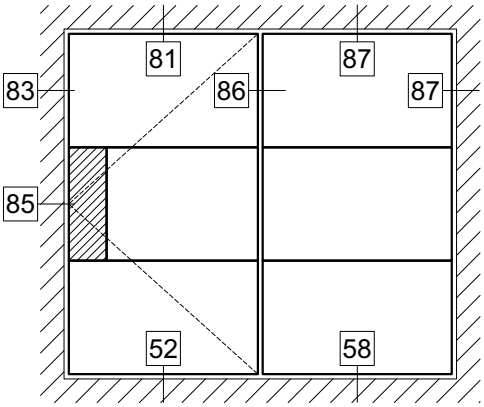


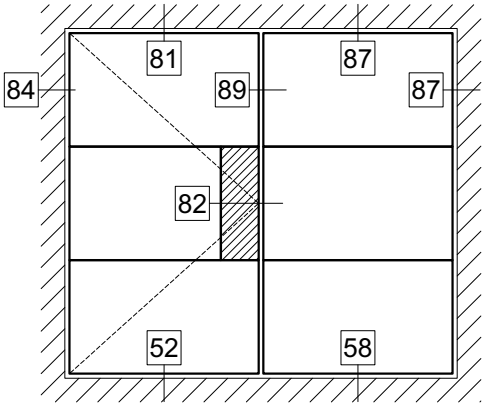


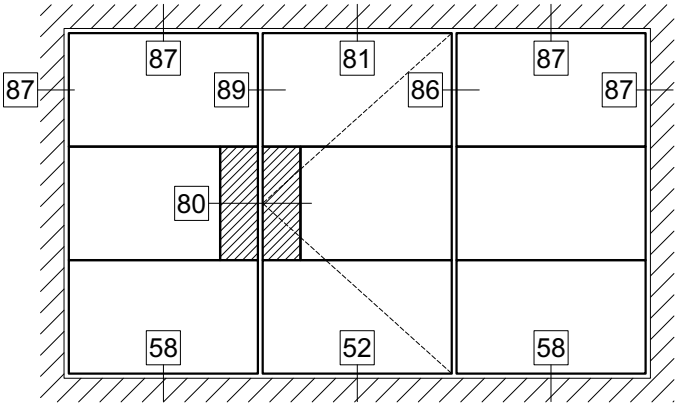


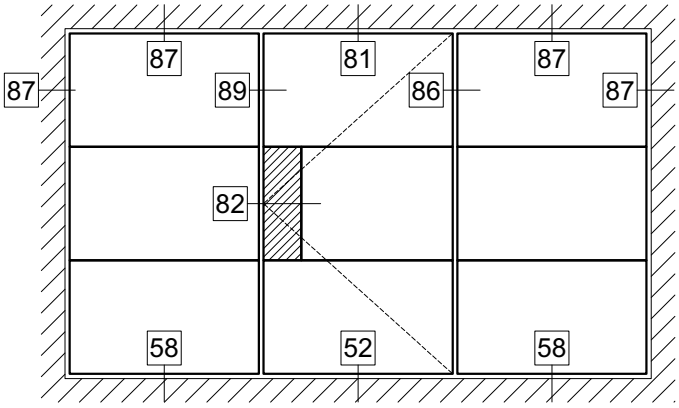


TYPE081



aliplast
member of
CORIALIS

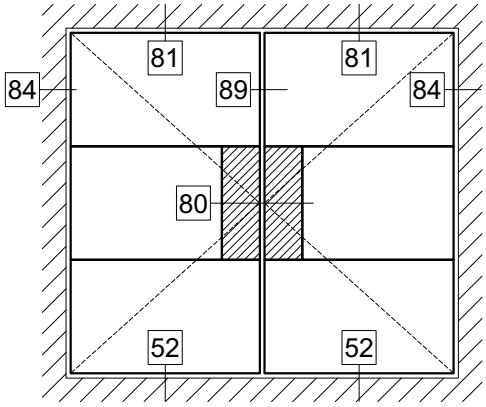
81
81
84
89
84
80
52
52

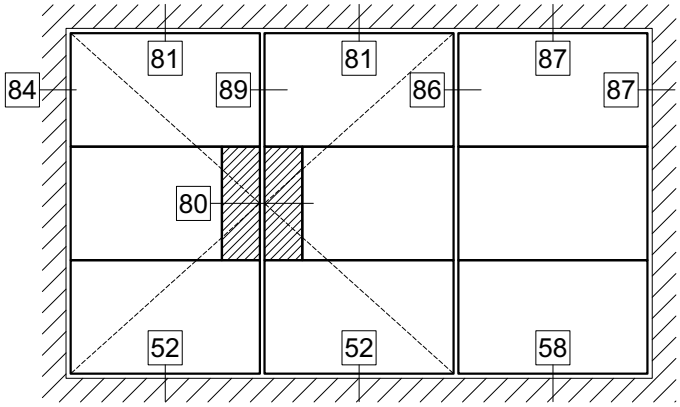
81
81
87
84
89
86
87
80
52
52
58

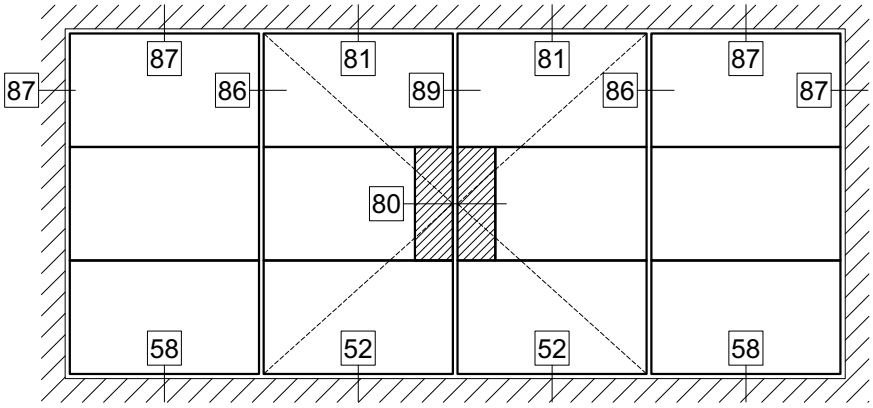
87
81
81
87
87
86
89
86
87
80
58
52
52
58

TYPE082

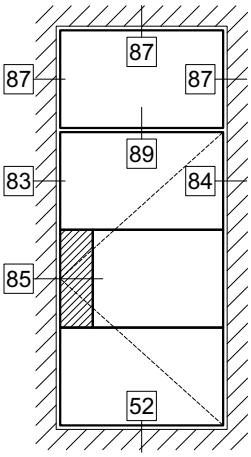
87
87
87
89
83
84
85
52

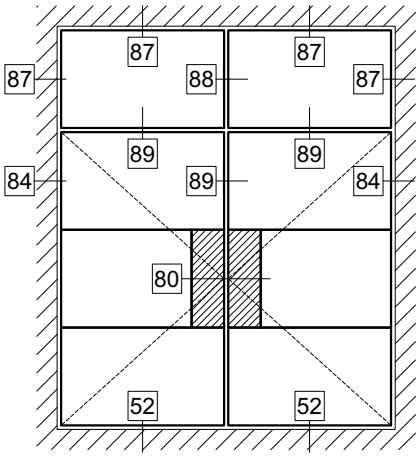
87
87
87
88
87
89
89
84
89
84
80
52
52

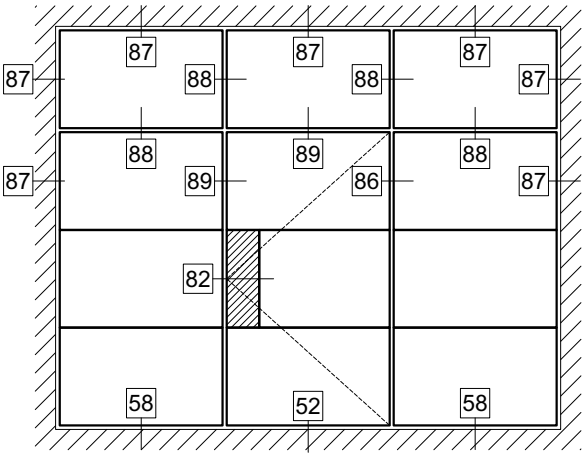
87
87
87
87
88
88
87
88
89
88
87
89
86
87
82
58
52
58

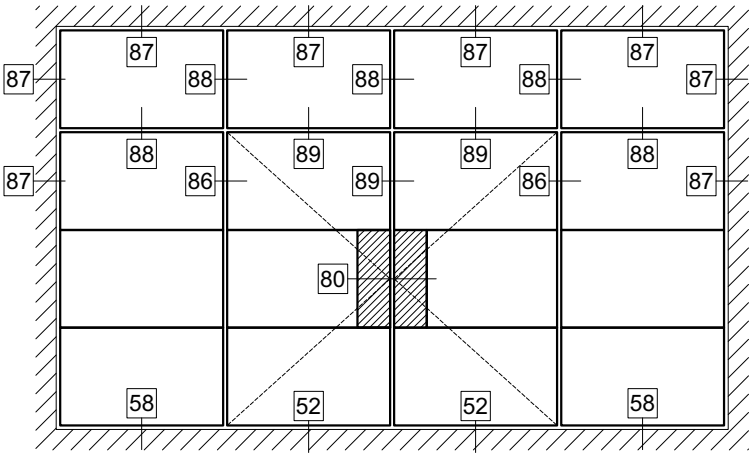
87
87
87
87
87
88
88
88
87
88
89
89
88
87
86
89
86
87
80
58
52
52
58

TYPE083

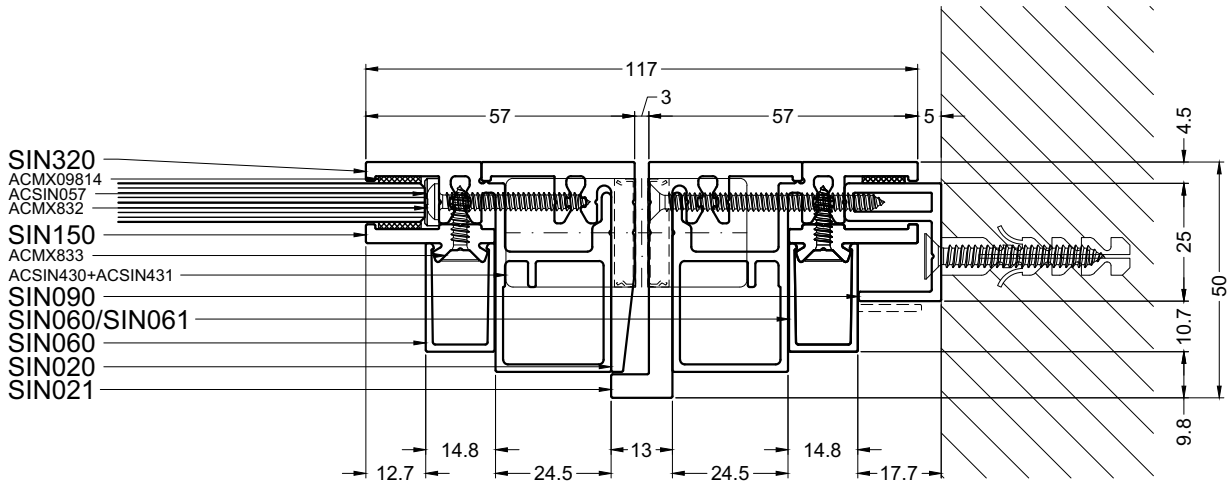


84-SIN090-SIN320-SIN021-SIN020-SIN320

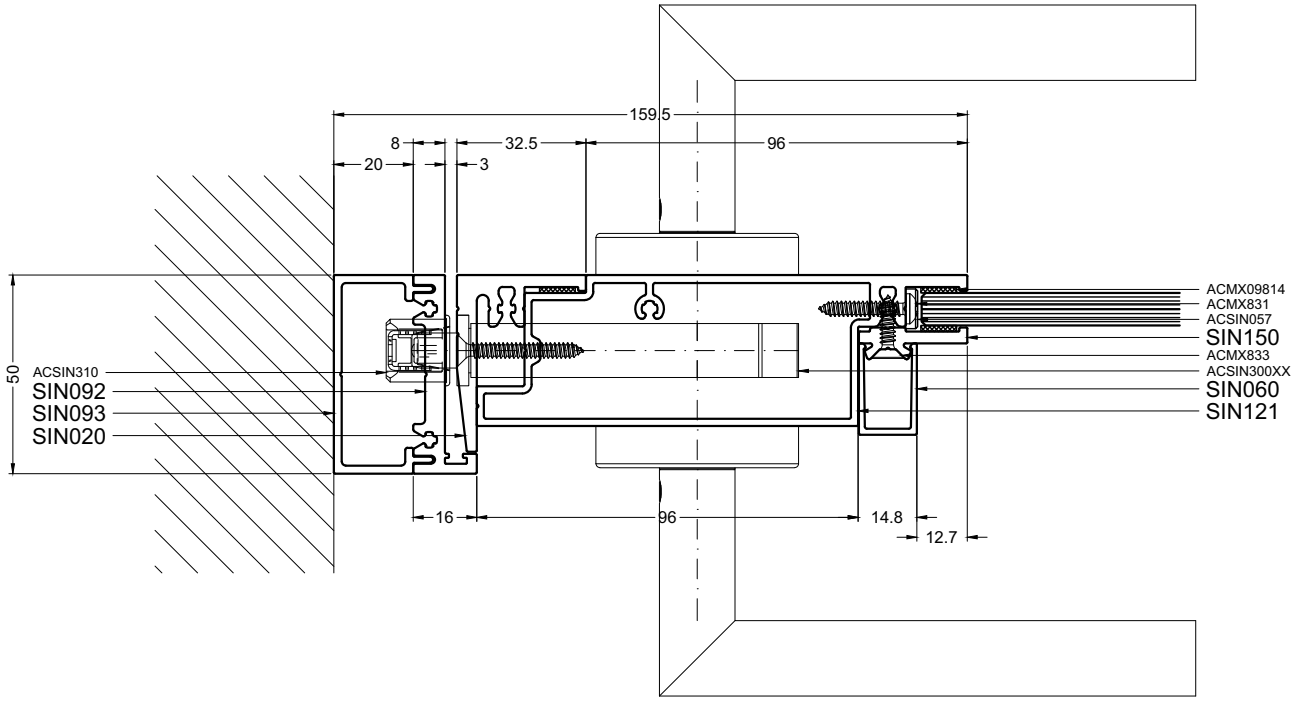


85-(SIN093)SIN092-SIN020-SIN121



aliplast
member of
CORIALIS

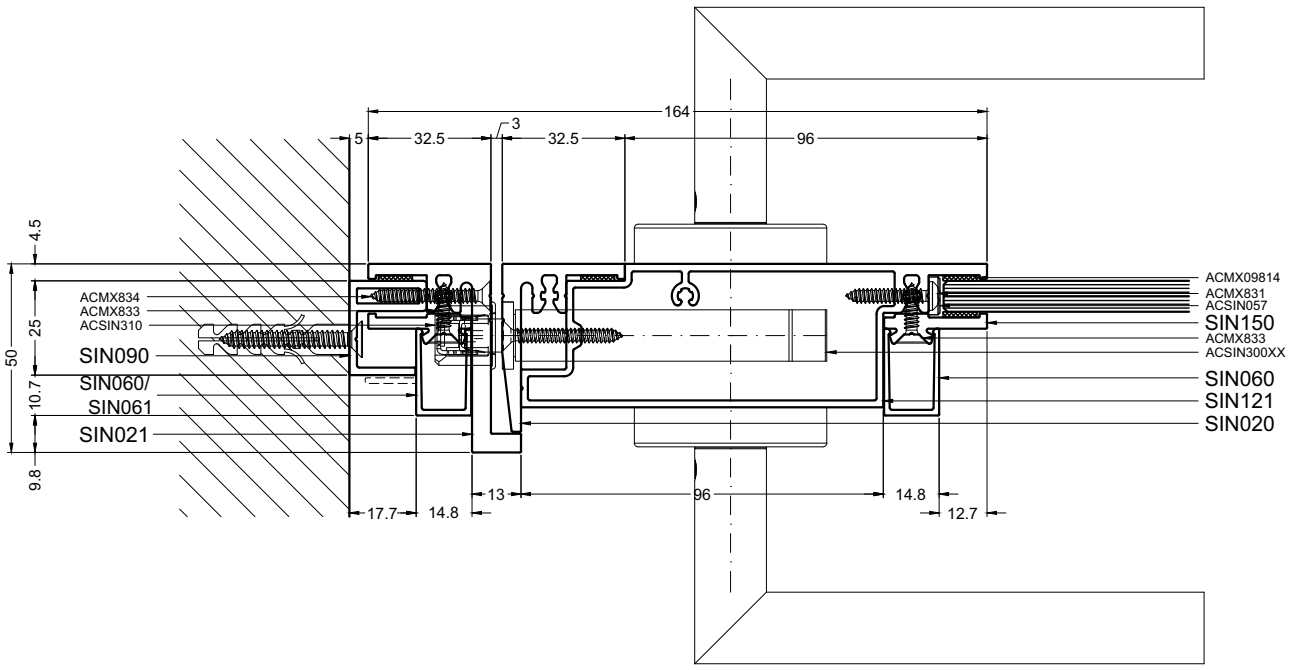


85-SIN090-SIN021-SIN020-SIN121

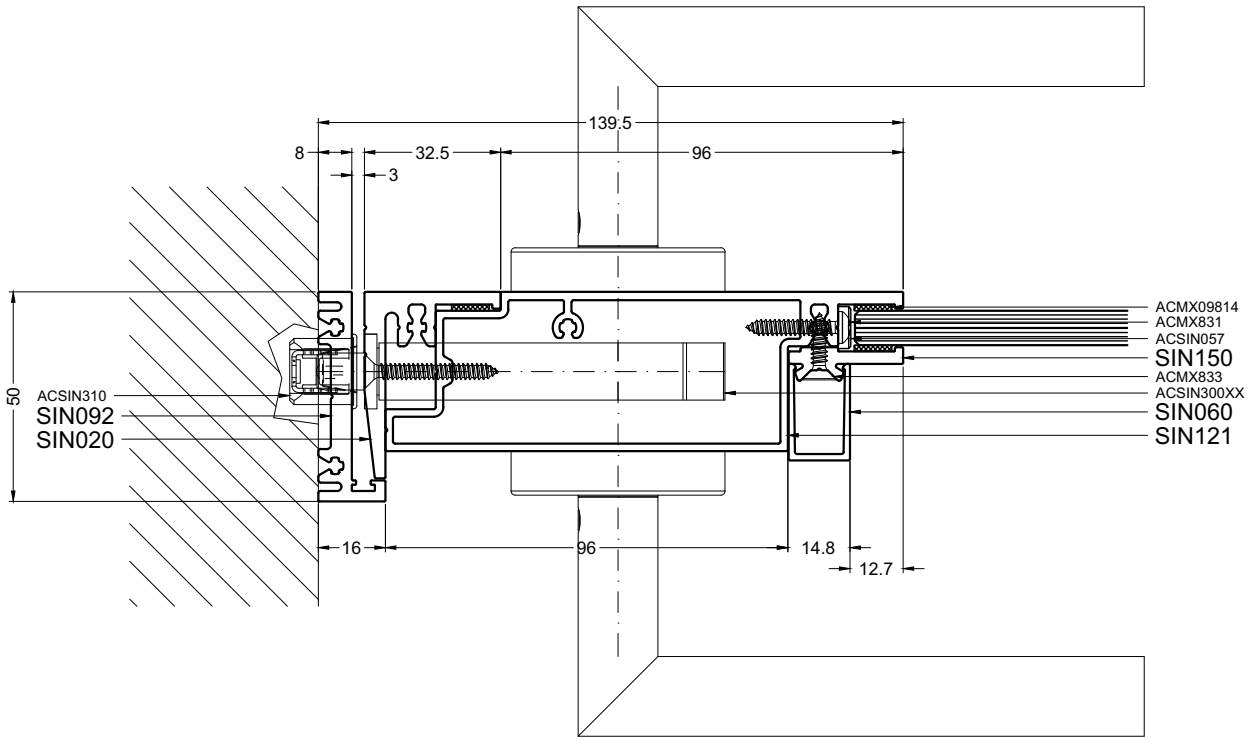


85-SIN092-SIN020-SIN121



aliplast
member of
CORIALIS

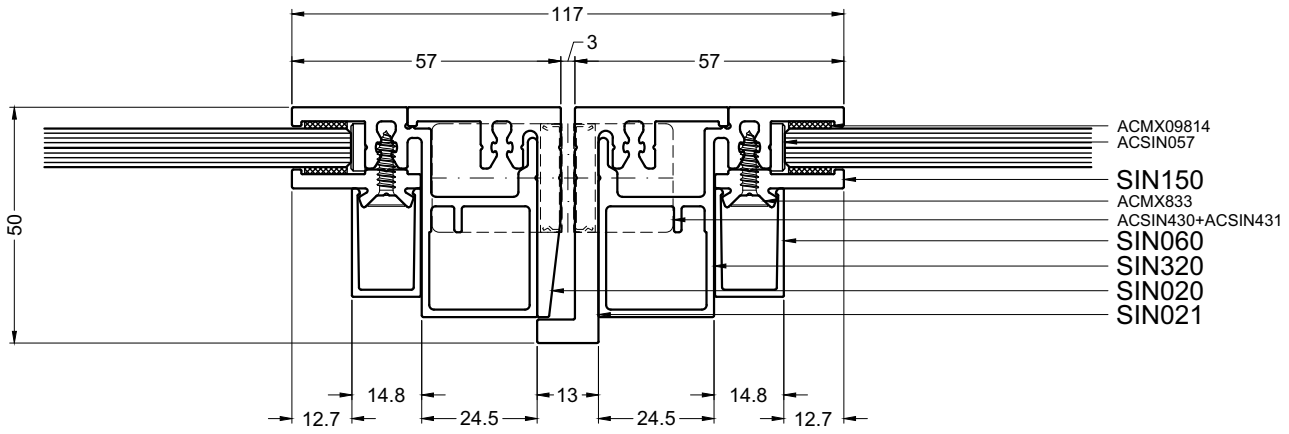


86-SIN320-SIN020-SIN021-SIN320

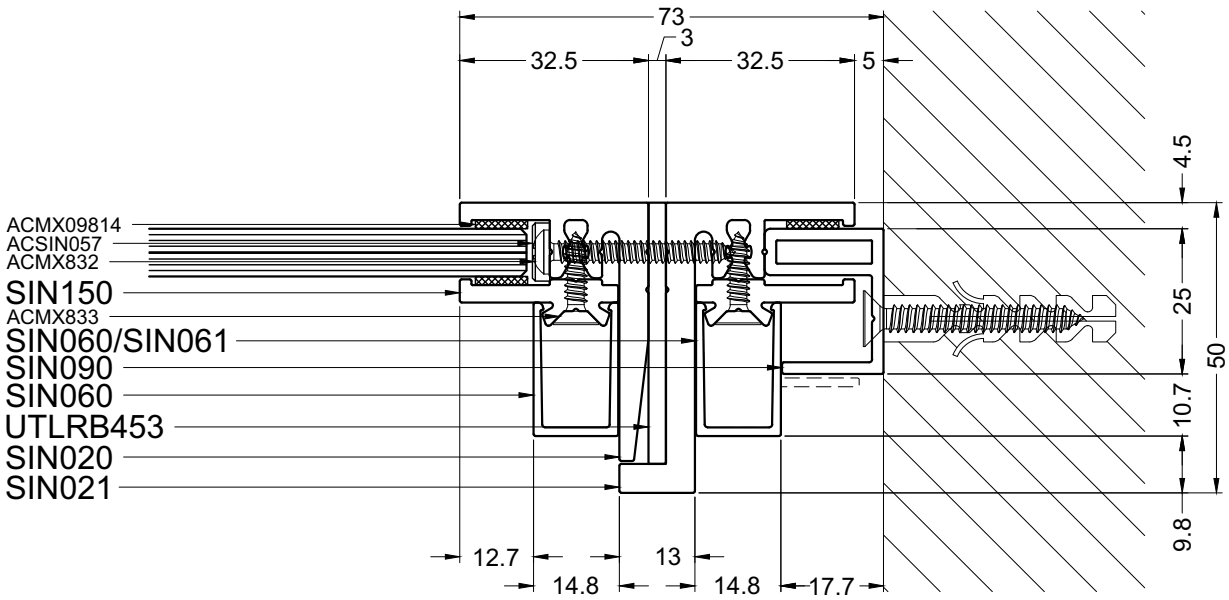


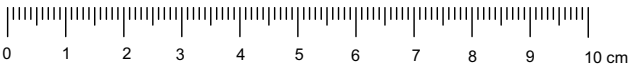


87-SIN090-SIN021-SIN020

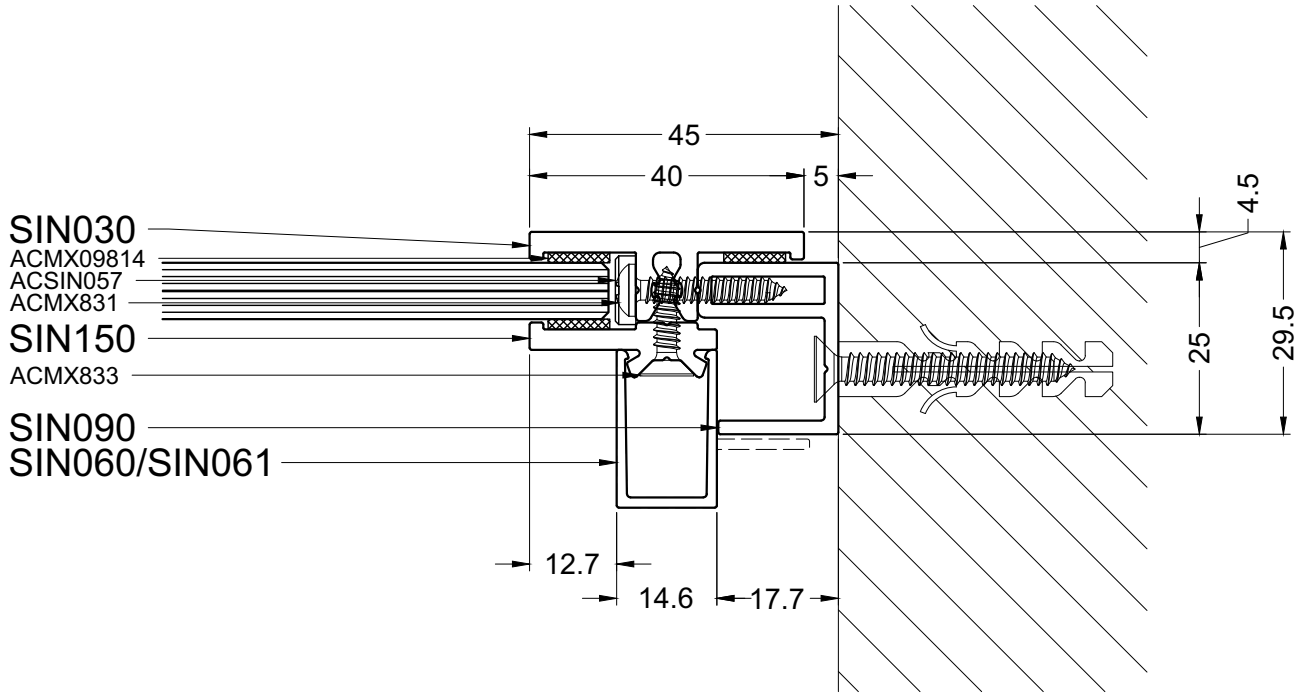


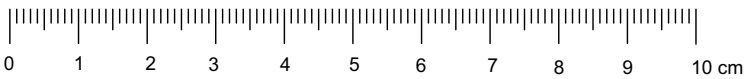


87-SIN090-SIN030(SIN060)

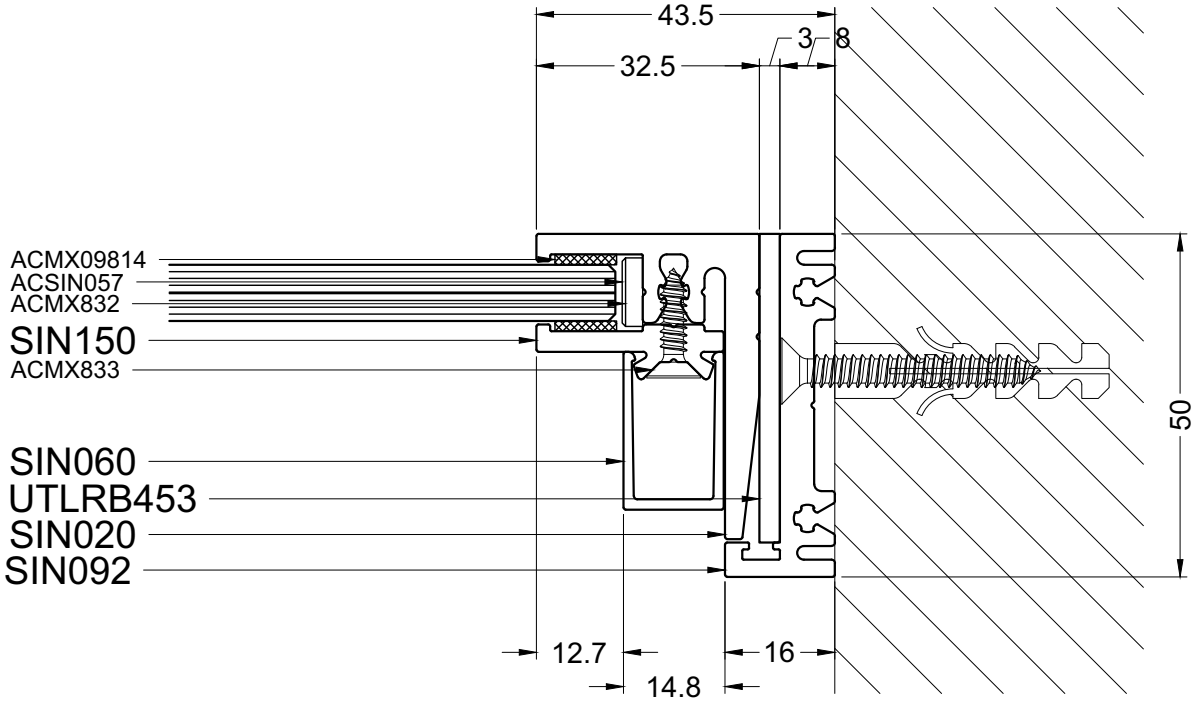


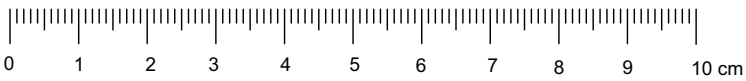


87-SIN092-SIN020

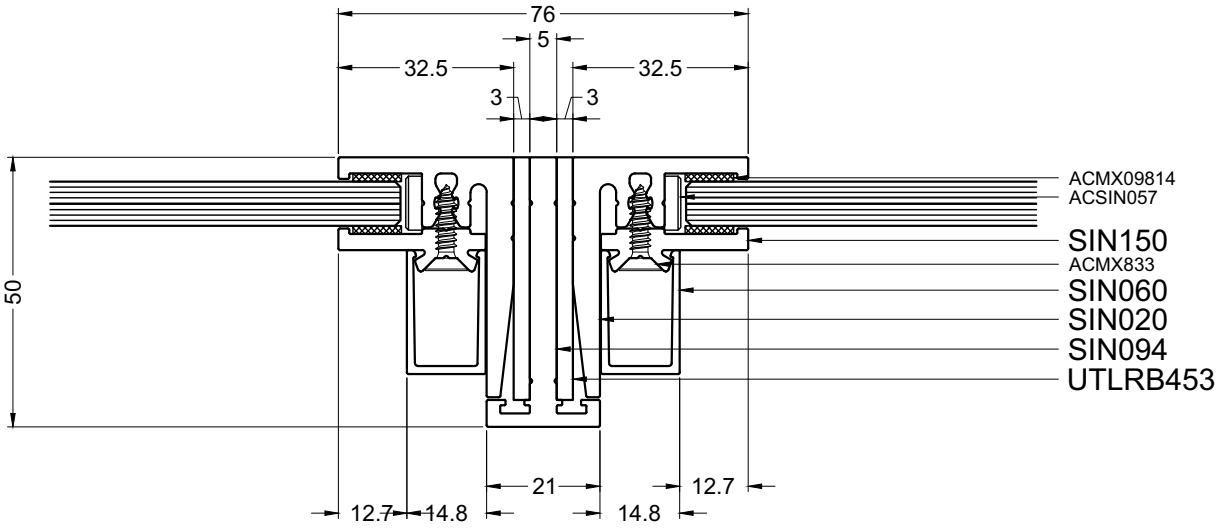


88-SIN020-SIN094-SIN020

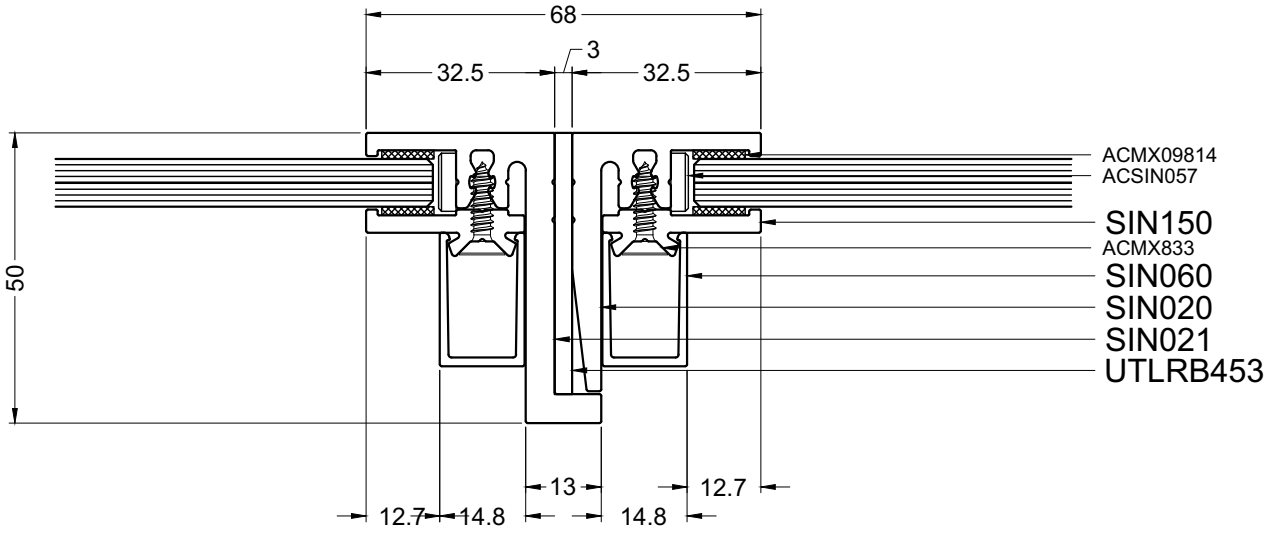


88-SIN021-SIN020

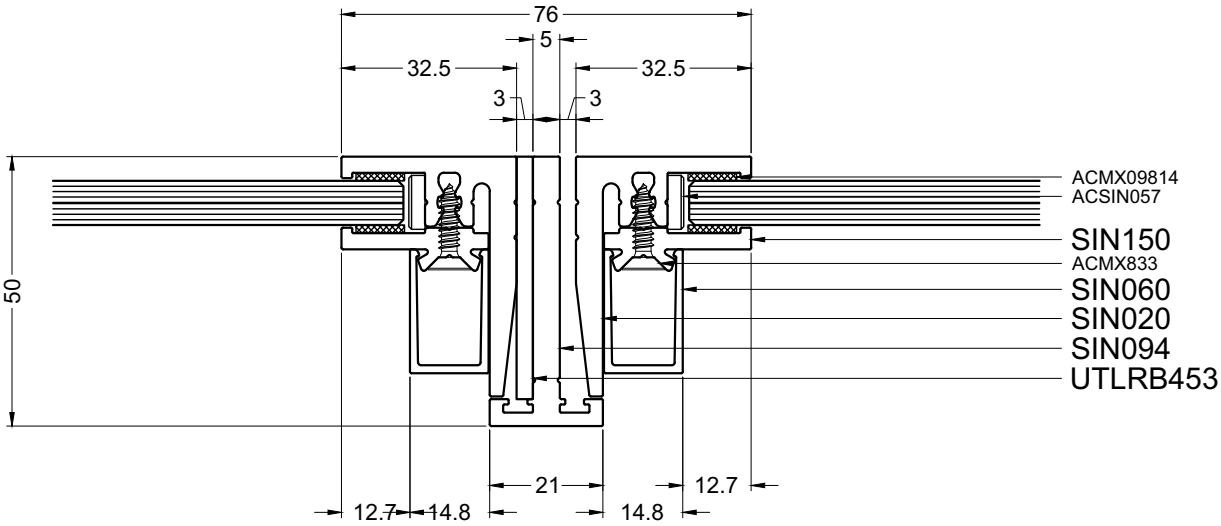


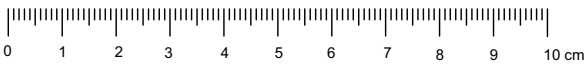


89-SIN020-SIN094-SIN020

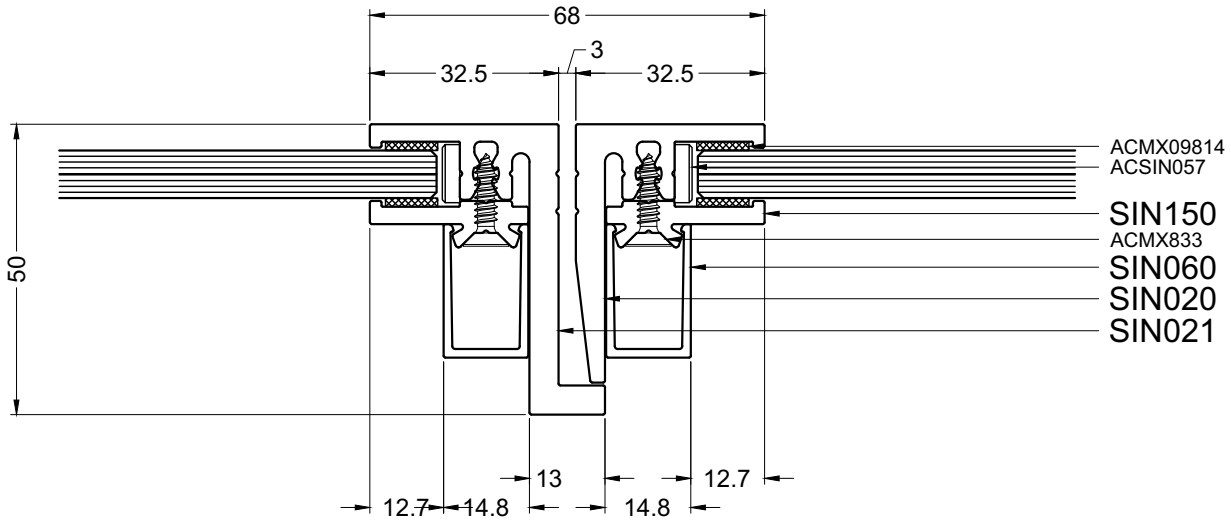


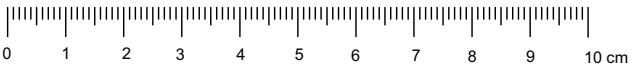


89-SIN021-SIN020

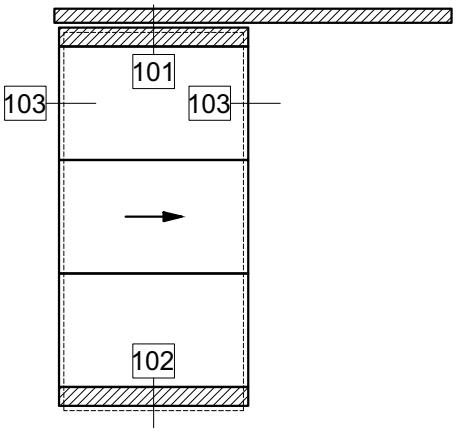


TYPE101

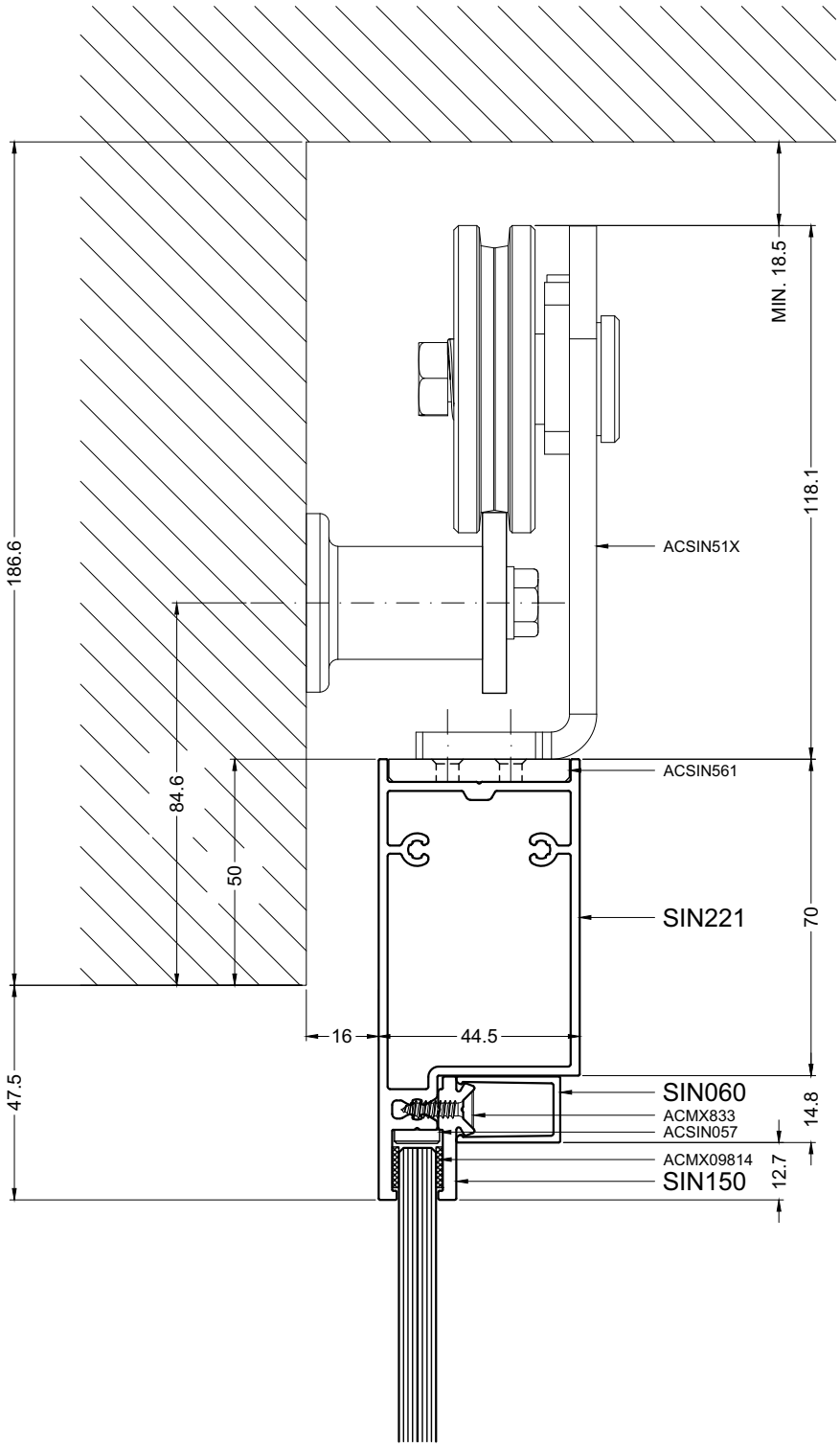


101-SIN221(LOFT)

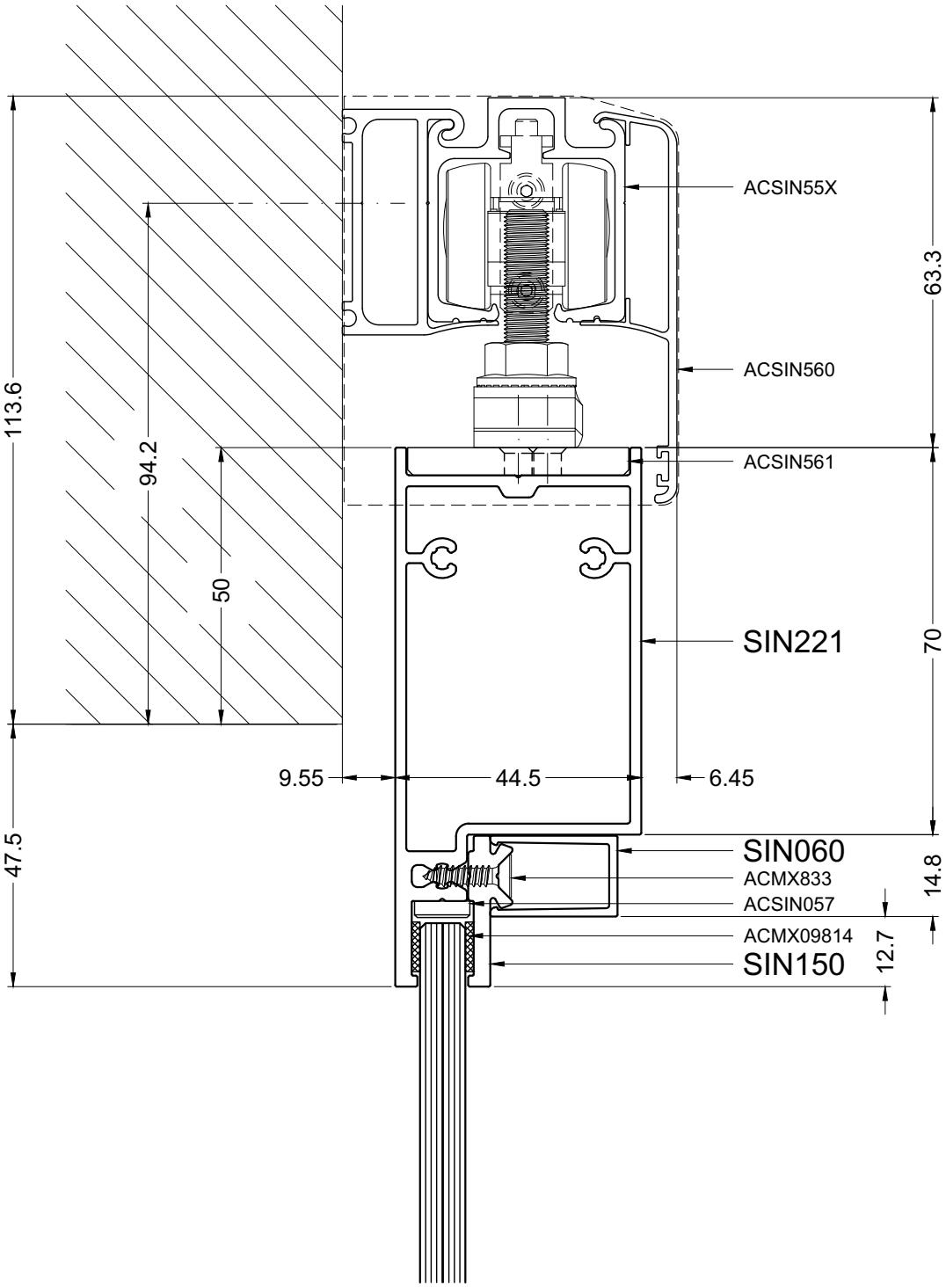

101-SIN221(MODERN)

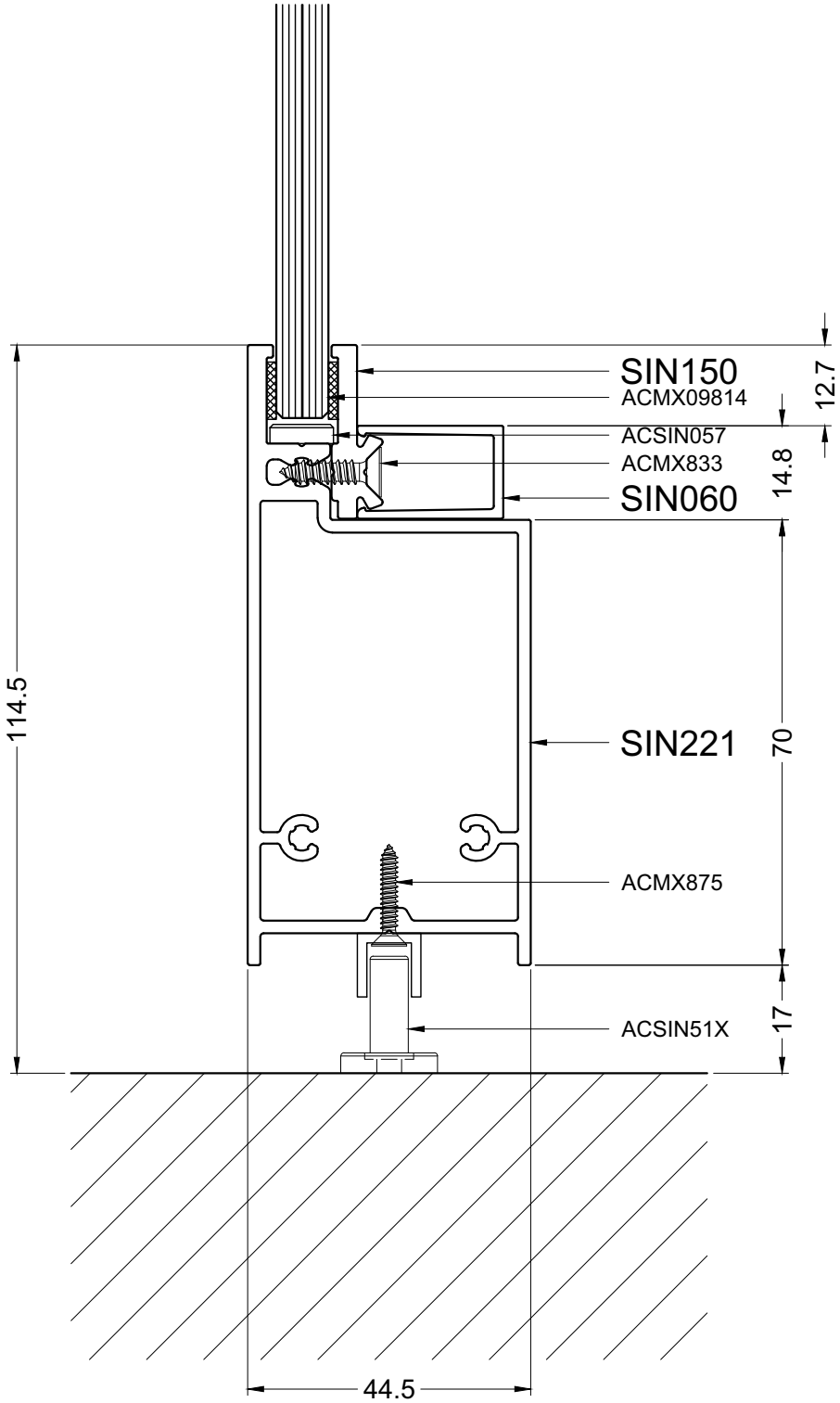


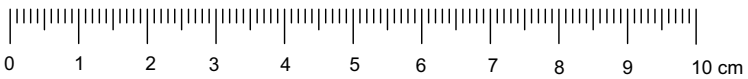


102-SIN221(LOFT)

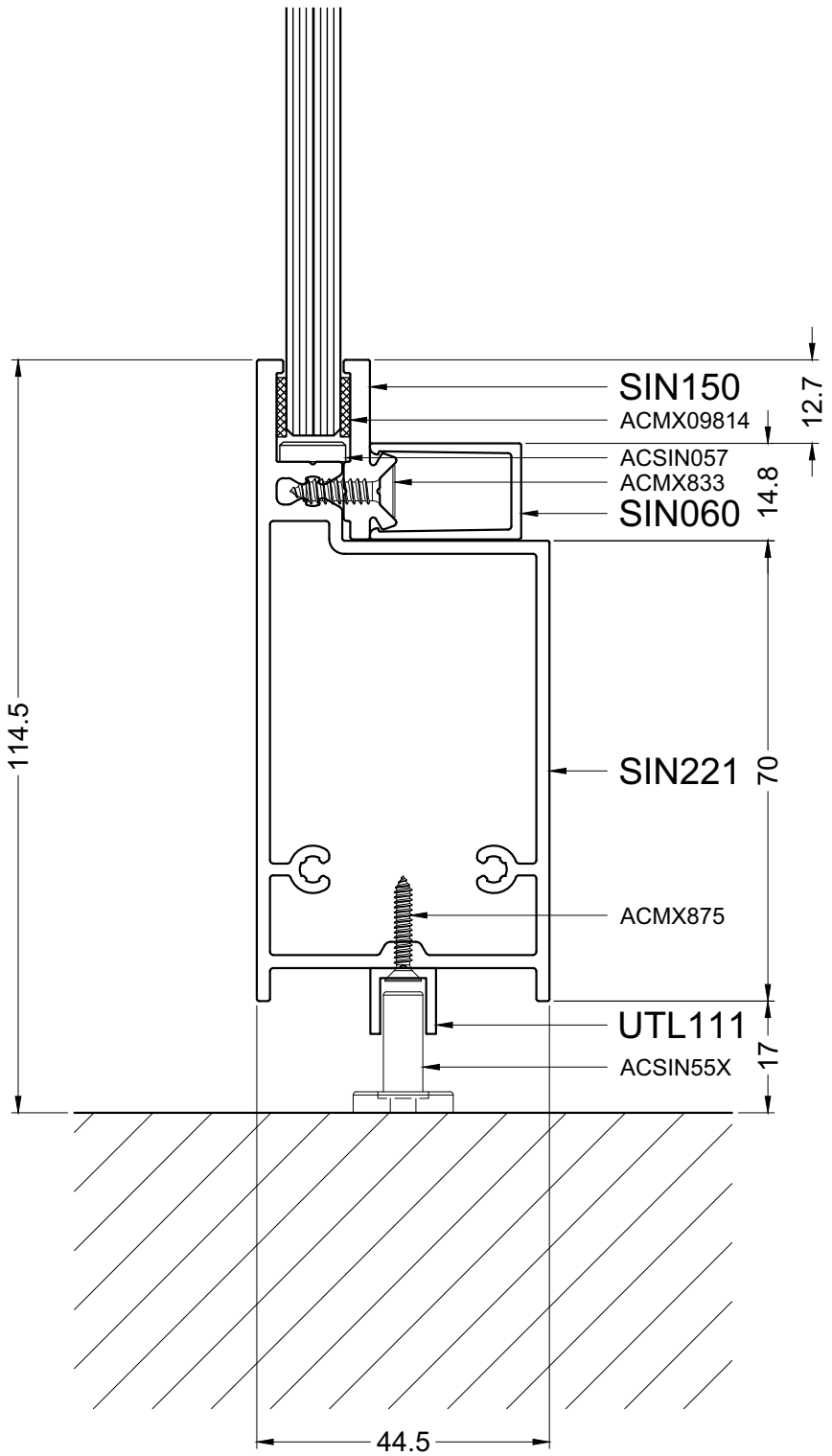

102-SIN221(MODERN)

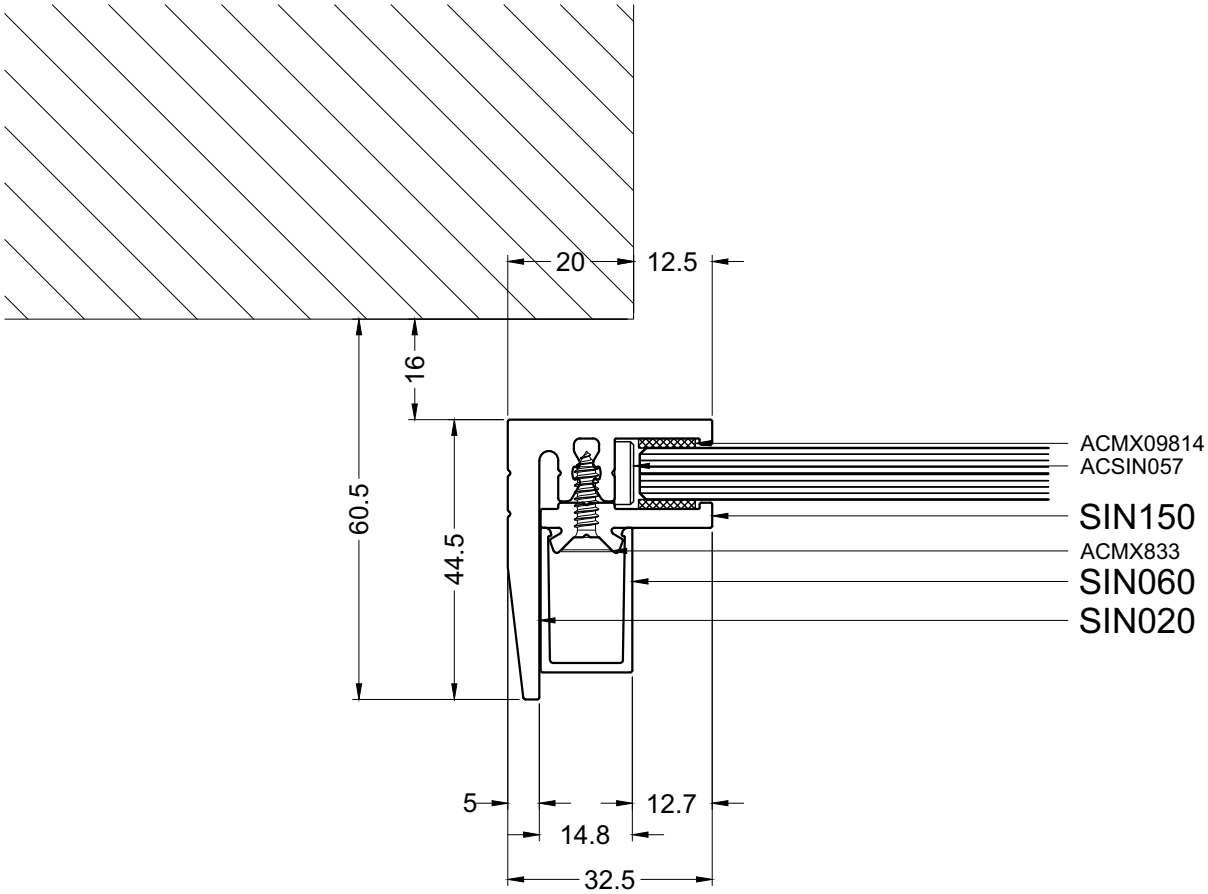


103-SIN020(LOFT)

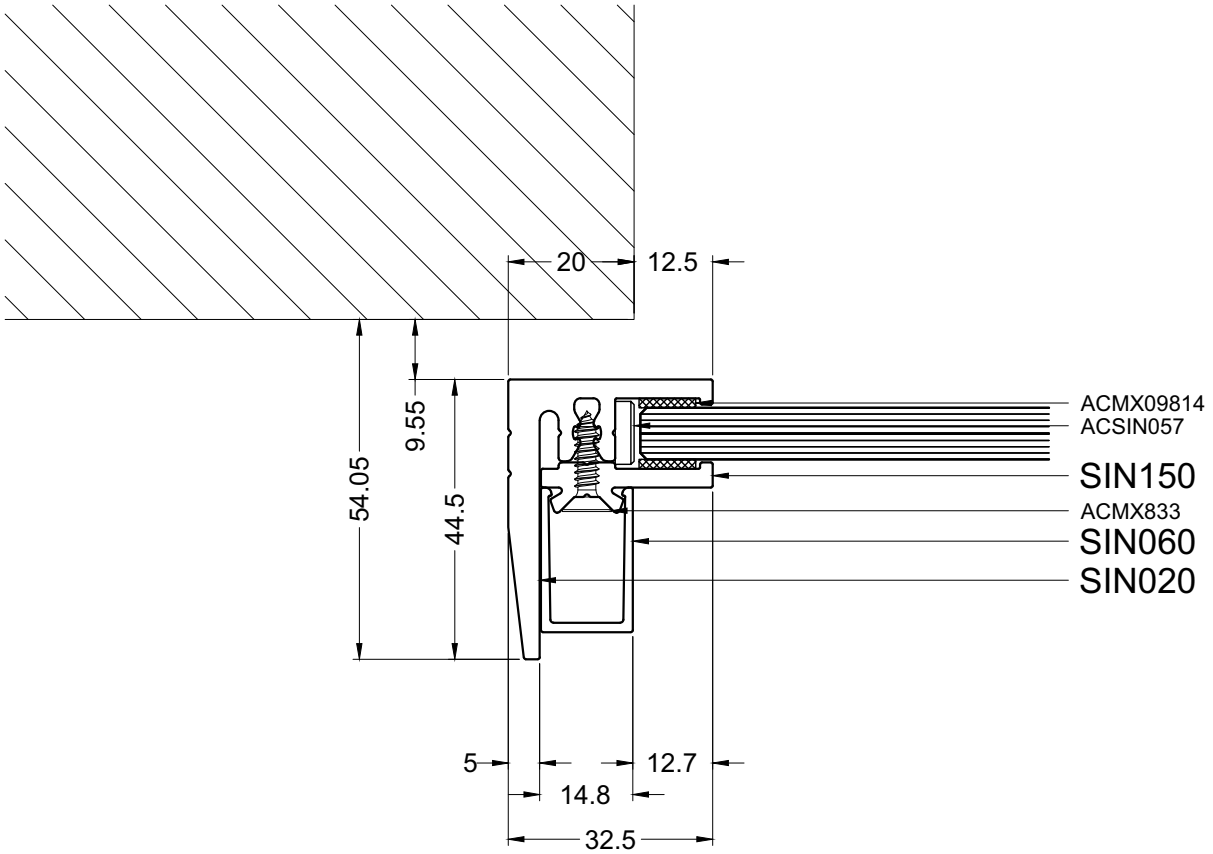

103-SIN020(MODERN)

# WAND000

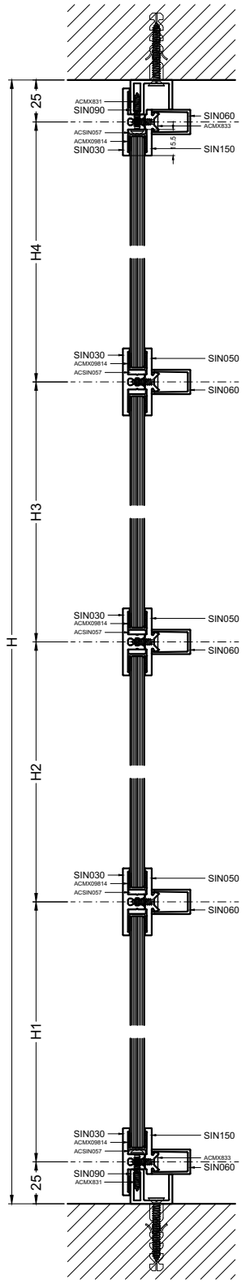


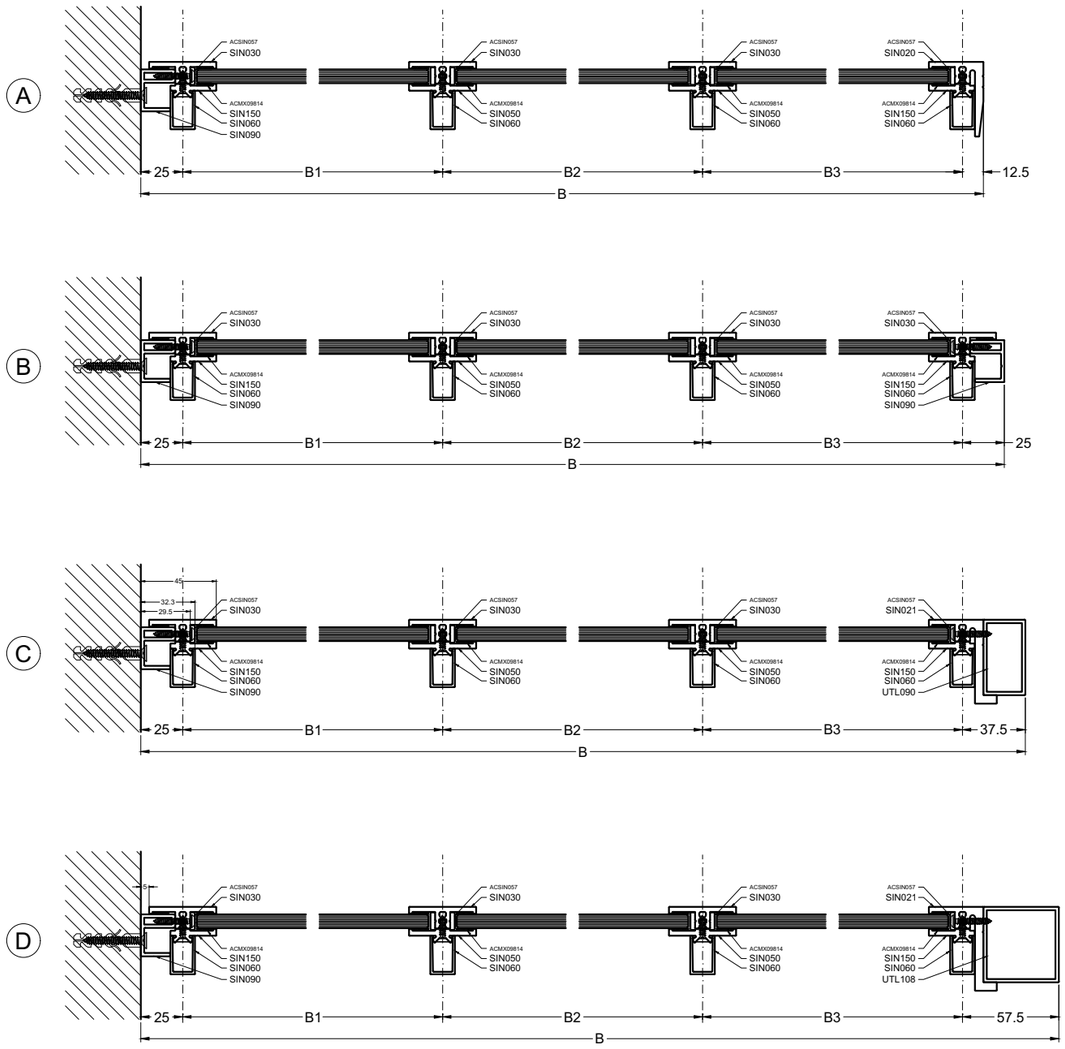


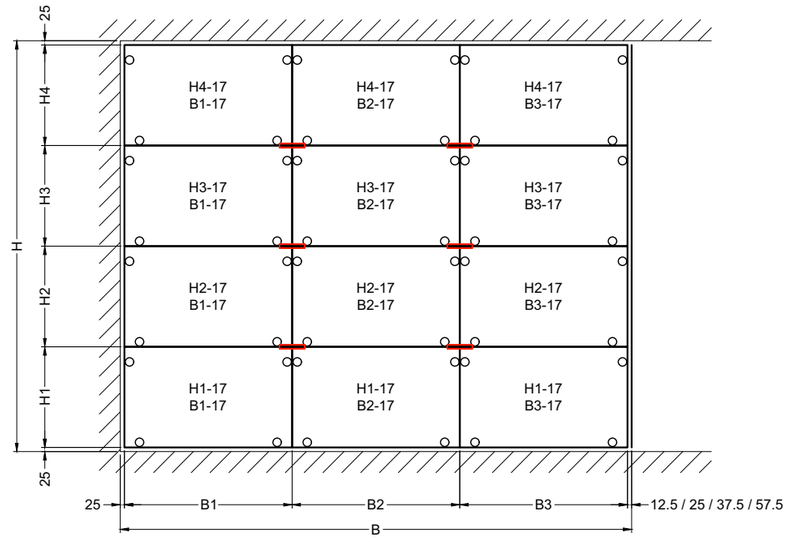


| | | | | |
|---|---|---|---|---|
| | SIN090 | | 1 | H |
| Ⓐ | SIN090 | | 2 | B-22.5 |
| | SIN020 | | 1 | H |
| Ⓑ | SIN090 | | 2 | B-35 |
| | | | 1 | H |
| | SIN030 | | 1 | H-10 |
| Ⓒ | SIN090 | | 2 | B-47.5 |
| | SIN021 | | 1 | H |
| | UTL090 | | 1 | H |
| Ⓓ | SIN090 | | 2 | B-67.5 |
| | SIN021 | | 1 | H |
| | UTL108 | | 1 | H |
| | SIN030 | | 1 | H-10 |
| | | | 2 | B1+B2+B3-9 |
| | | | 2 | H-59 |
| | | | 3 | B1-9 |
| | | | 3 | B2-9 |
| | | | 3 | B3-9 |

| | | | | |
|---|---|---|---|---|
| | SIN050 | | 2 | H-35.4 |
| | | | 3 | B1-40 |
| | | | 3 | B2-40 |
| | | | 3 | B3-40 |
| | SIN060 | | 2 | H-35.4 |
| | | | 3 | B1-14.6 |
| | | | 3 | B2-14.6 |
| | | | 3 | B2-14.6 |
| | SIN150 | | 2 | H-35.4 |
| | | | 2 | B1-40 |
| | | | 2 | B2-40 |
| | | | 2 | B3-40 |
| | SIN060 | | 2 | H-35.4 |
| | | | 2 | B1-14.6 |
| | | | 2 | B2-14.6 |
| | | | 2 | B2-14.6 |

| | | |
|---|---|---|
| | ACSIN057 | 48 |
| | ACSIN030 | 6 |
| | ACMX09814 | 7H+10B |
| | ACMX09814<br>OF / OU / OEFK / OR<br>ACMX09816 | 6H+8B |
| Ⓑ | ACMX09814 | H |

ZAAGTABELLEN-COUPES ET DEBITS-ZUSCHNITTSTABELLEN-FABRICATION CHARTS

WAND000

aliplast member of CORIALIS

# WAND001

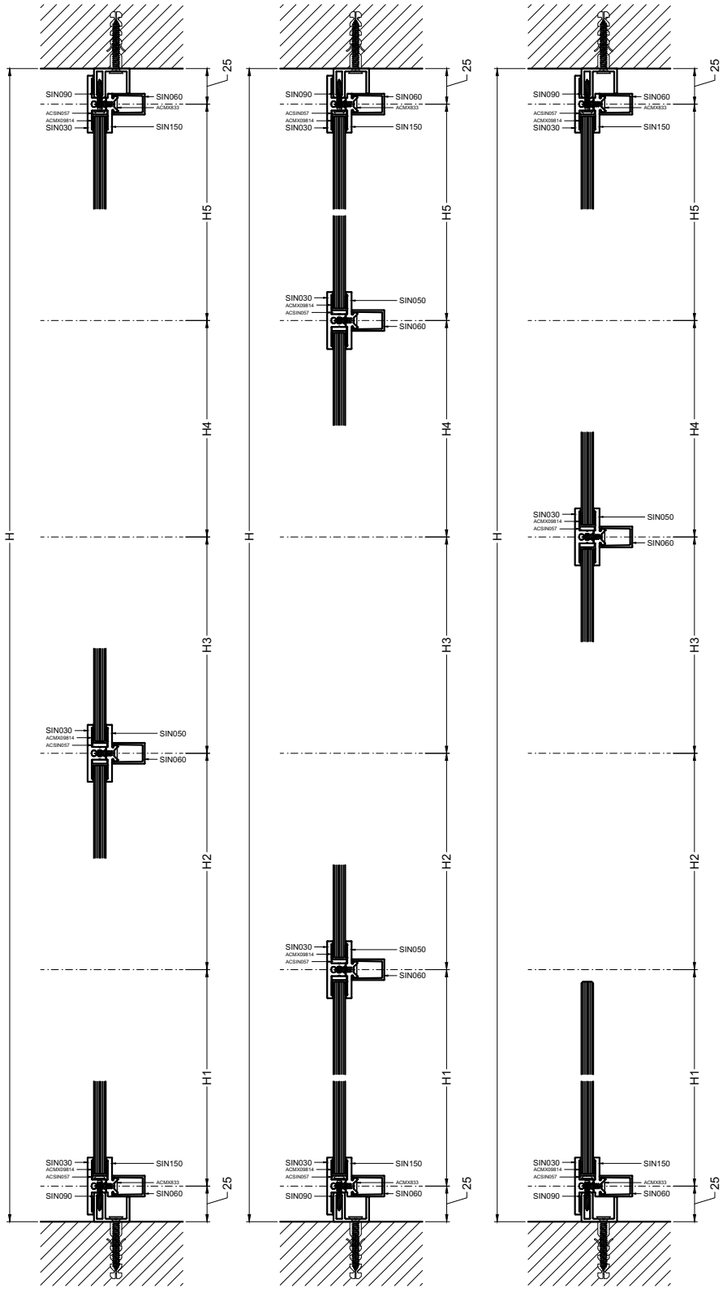


| | | | | |
|---|---|---|---|---|
| SIN090 | | 2 | | H |
| | | 2 | | B-35 |
| SIN030 | | 2 | | H-10 |
| | | 2 | | B-59 |
| | | 2 | | H-59 |
| | | 1 | | B1-9 |
| | | 2 | | B2-9 |
| | | 1 | | B3-9 |
| SIN050 | | 2 | | H-90 |
| | | 1 | | B1-40 |
| | | 2 | | B2-40 |
| | | 1 | | B3-40 |
| SIN060 | | 2 | | H-64.6 |
| | | 1 | | B1-14.6 |
| | | 2 | | B2-14.6 |
| | | 1 | | B2-14.6 |
| SIN150 | | 2 | | H-35.4 |
| | | 2 | | B-90 |
| | | 2 | | B2-40 |
| | | 2 | | B3-40 |
| SIN060 | | 2 | | H-35.4 |
| | | 2 | | B-64.6 |

| | |
|---|---|
| ACSIN057 | 28 |
| ACMX09814 | 8H+6B+2B2 |
| ACMX09814<br>ACMX09816 | 6H+4B+2B2 |

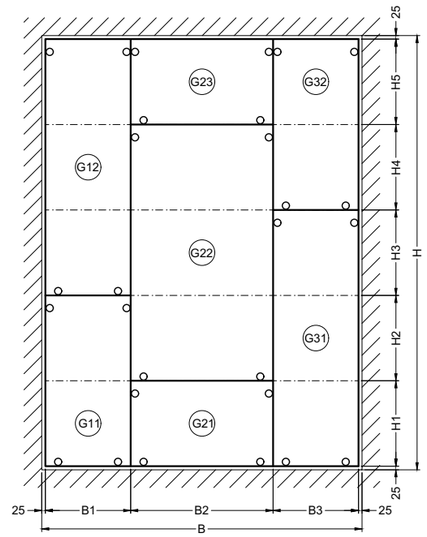


| | |
|---|---|
| G11 | H1+H2-17<br>B1-17 |
| G12 | H3+H4+H5-17<br>B1-17 |
| G21 | H1-17<br>B2-17 |
| G22 | H2+H3+H4-17<br>B2-17 |
| G23 | H5-17<br>B2-17 |
| G31 | H1+H2+H3-17<br>B1-17 |
| G32 | H4+H5-17<br>B1-17 |

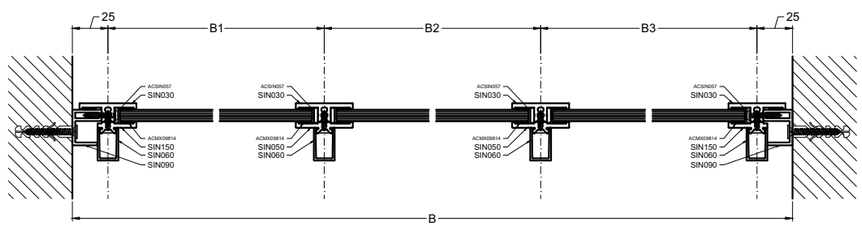


WAND001

# WAND002

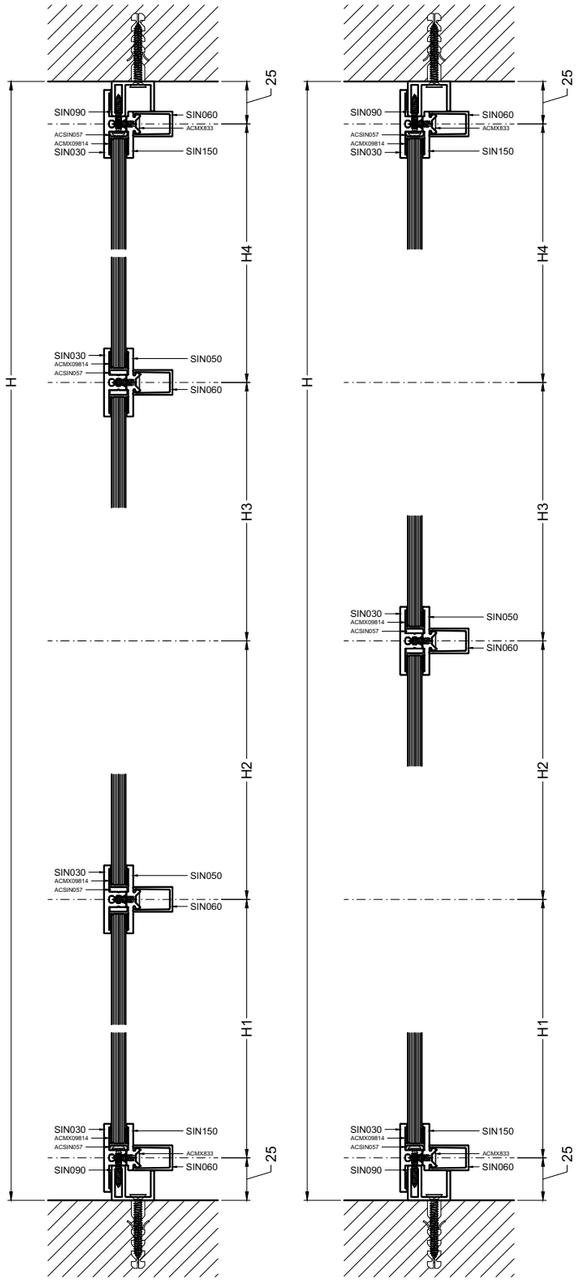


| | | | | |
|---|---|---|---|---|
| SIN090 | | 2 | | H |
| | | 2 | | B-35 |
| SIN030 | | 2 | | H-10 |
| | | 2 | | B-59 |
| | | 2 | | H2+H3+40 |
| | | 2 | | B2+B3+40 |
| | | 1 | | B1-9 |
| | | 1 | | B4-9 |
| | | 1 | | H1-9 |
| | | 1 | | H4-9 |
| SIN050 | | 2 | | H2+H3+40 |
| | | 2 | | B2+B3+40 |
| | | 1 | | B1-9 |
| | | 1 | | B4-9 |
| | | 1 | | H1-9 |
| | | 1 | | H4-9 |
| SIN060 | | 2 | | H2+H3+14.6 |
| | | 2 | | B2+B3+14.6 |
| | | 1 | | B1-14.6 |
| | | 1 | | B4-14.6 |
| | | 1 | | H1-14.6 |
| | | 1 | | H4-14.6 |
| SIN150 | | 2 | | H-35.4 |
| | | 2 | | B-90 |
| SIN060 | | 2 | | H-35.4 |
| | | 2 | | B-64.6 |

| | |
|---|---|
| ACSIN057 | 28 |
| ACMX09814 | 6H+2(H2+H3)+6B+2(B2+B3) |
| ACMX09814 / ACMX09816 | 4H+2(H2+H3)+4B+2(B2+B3) |

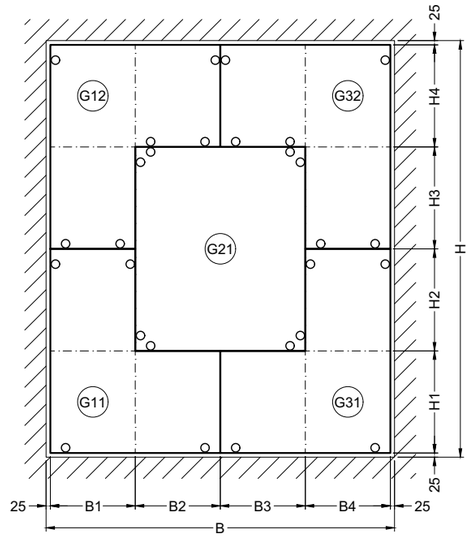


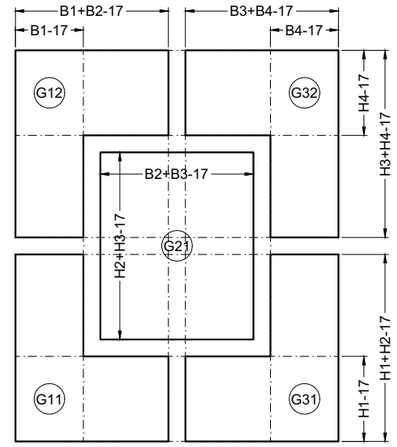


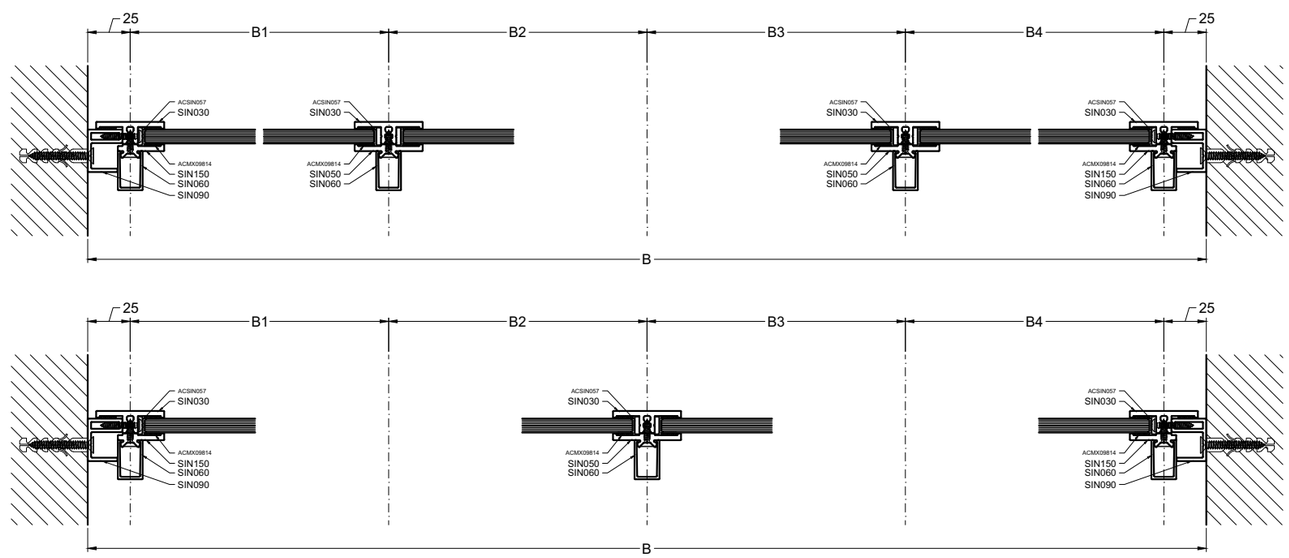


WAND002

# WAND003

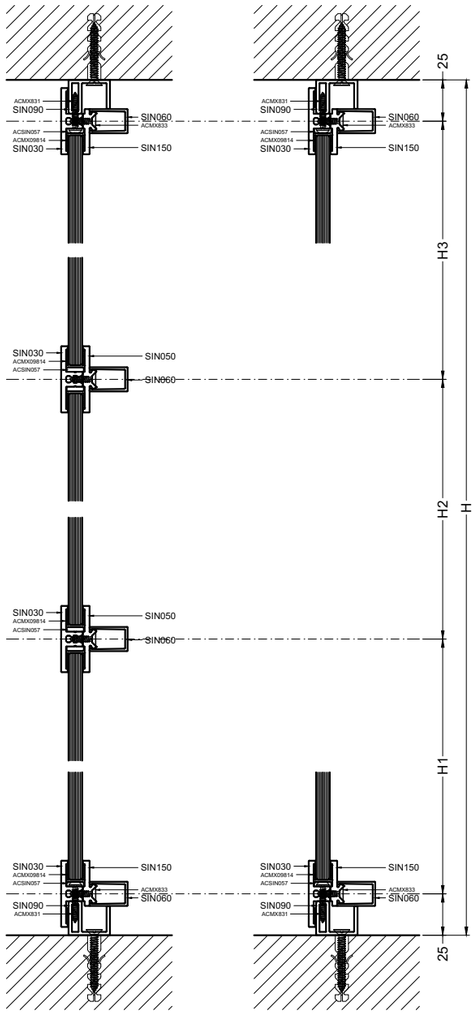


| | | | | |
|---|---|---|---|---|
| SIN090 | | 2 | | H |
| | | 2 | | B-35 |
| SIN030 | | 2 | | H-10 |
| | | 2 | | B-59 |
| | | 1 | | H1+H2+15.5 |
| | | 1 | | H3+H2+15.5 |
| | | 2 | | B2+15.5 |
| SIN050 | | 1 | | H1+H2 |
| | | 1 | | H3+H2 |
| | | 2 | | B2 |
| SIN060 | | 1 | | H1+H2 |
| | | 1 | | H3+H2 |
| | | 2 | | B2 |
| SIN150 | | 2 | | H-35.4 |
| | | 2 | | B-90 |
| SIN060 | | 2 | | H-35.4 |
| | | 2 | | B-64.6 |

| | |
|---|---|
| ACSIN057 | 25 |
| ACMX09814 | 4B+4B2+6H+2H2 |
| ACMX09814<br>OR 1 ISU = 2ISDR + 1 DR<br>ACMX09816 | 2B+4B2+4H+2H2 |

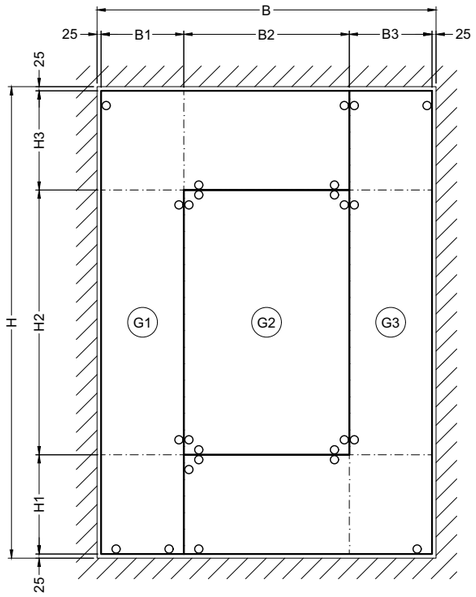


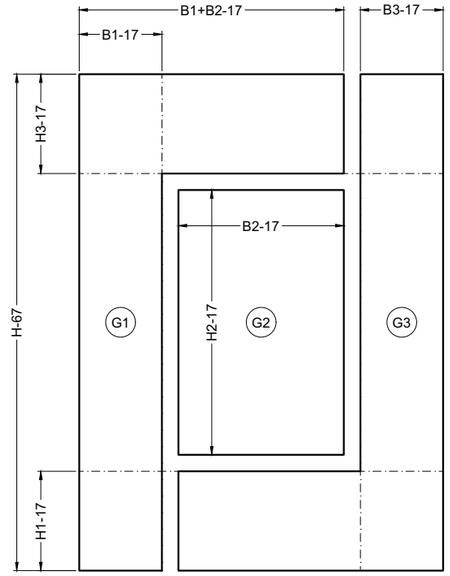


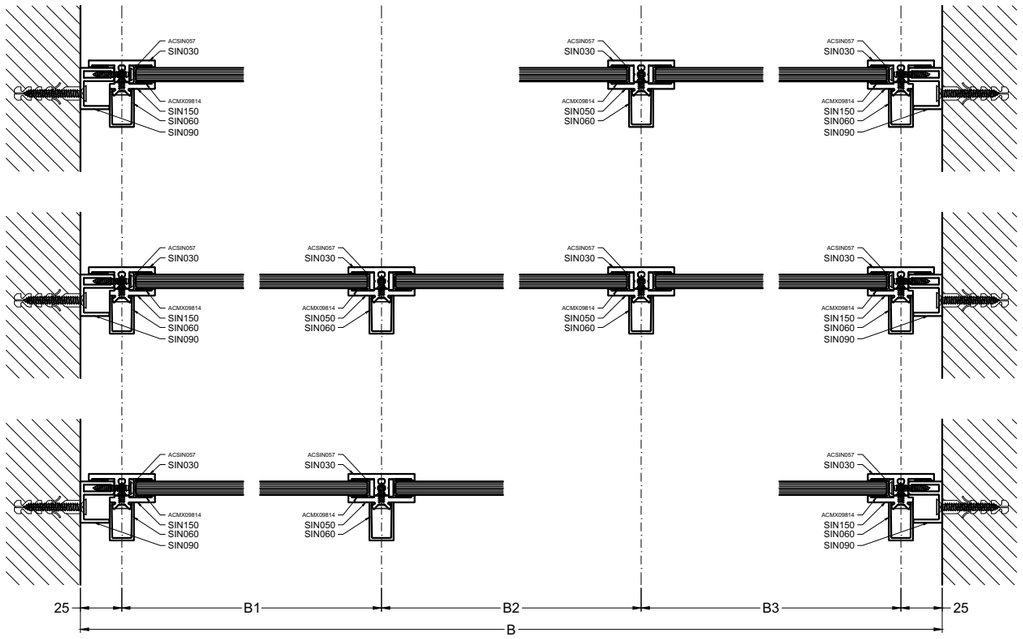

# WAND004

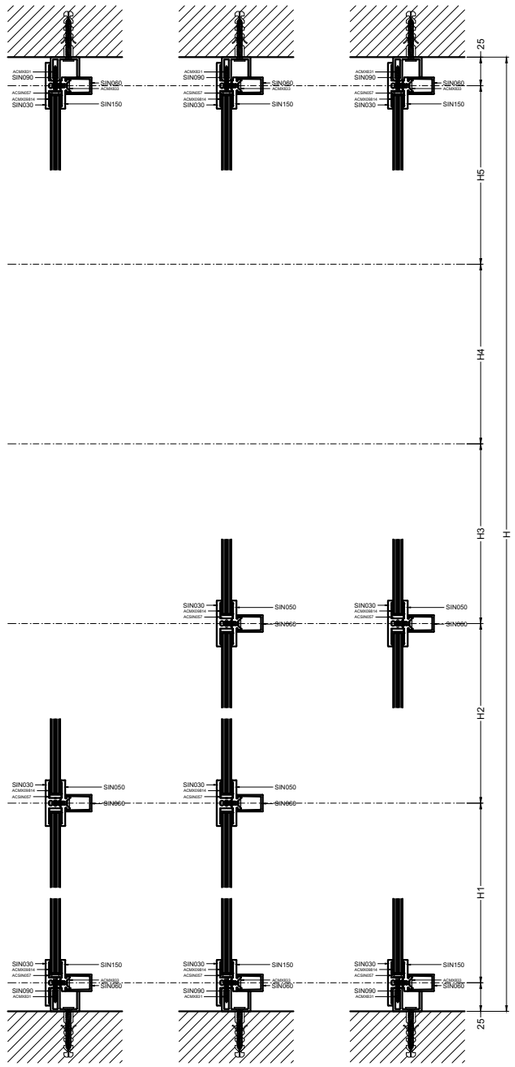


| | | | | |
|---|---|---|---|---|
| SIN090 | E | 2 | | H |
| | | 2 | | B-35 |
| SIN030 | F | 2 | | H-10 |
| | | 2 | | B-59 |
| | | 2 | | H-59 |
| | | 1 | | H1+H2-9 |
| | | 1 | | H2+H3+H4+H5-9 |
| | | 1 | | B11+B12-9 |
| | | 1 | | B12+B13-9 |
| | | 1 | | H1+H2+H3-9 |
| | | 1 | | H3+H4+H5-9 |
| | | 1 | | B21+B22-9 |
| | | 1 | | B22+B23-9 |
| | | 1 | | H1+H2+H3+H4-9 |
| | | 1 | | H4+H5-9 |
| | | 1 | | B31+B32-9 |
| | | 1 | | B32+B33-9 |
| SIN050 | F | 2 | | H-90 |
| | | 1 | | H1+H2-40 |
| | | 1 | | H2+H3+H4+H5-40 |
| | | 1 | | B11+B12-40 |
| | | 1 | | B12+B13-40 |
| | | 1 | | H1+H2+H3-40 |
| | | 1 | | H3+H4+H5-40 |
| | | 1 | | B21+B22-40 |
| | | 1 | | B22+B23-40 |
| | | 1 | | H1+H2+H3+H4-40 |
| | | 1 | | H4+H5-40 |
| | | 1 | | B31+B32-40 |
| | | 1 | | B32+B33-40 |

| | | | | |
|---|---|---|---|---|
| SIN060 | H | 2 | | H-64.6 |
| | | 1 | | H1+H2-14.6 |
| | | 1 | | H2+H3+H4+H5-14.6 |
| | | 1 | | B11+B12-14.6 |
| | | 1 | | B12+B13-14.6 |
| | | 1 | | H1+H2+H3-14.6 |
| | | 1 | | H3+H4+H5-14.6 |
| | | 1 | | B21+B22-14.6 |
| | | 1 | | B22+B23-14.6 |
| | | 1 | | H1+H2+H3+H4-14.6 |
| | | 1 | | H4+H5-14.6 |
| | | 1 | | B31+B32-14.6 |
| | | 1 | | B32+B33-14.6 |
| SIN150 | I | 2 | | H-35.4 |
| | | 2 | | B-90 |
| SIN060 | H | 2 | | H-35.4 |
| | | 2 | | B-64.6 |

| | |
|---|---|
| ACSIN057 | 74 |
| ACSIN030 | 2 |
| ACMX09814 | 6B+14H+2(B12+B22+B32) +2(H2+H3+H4) |
| ACMX09814 ACMX09816 | 4B+12H+2(B12+B22+B32) +2(H2+H3+H4) |

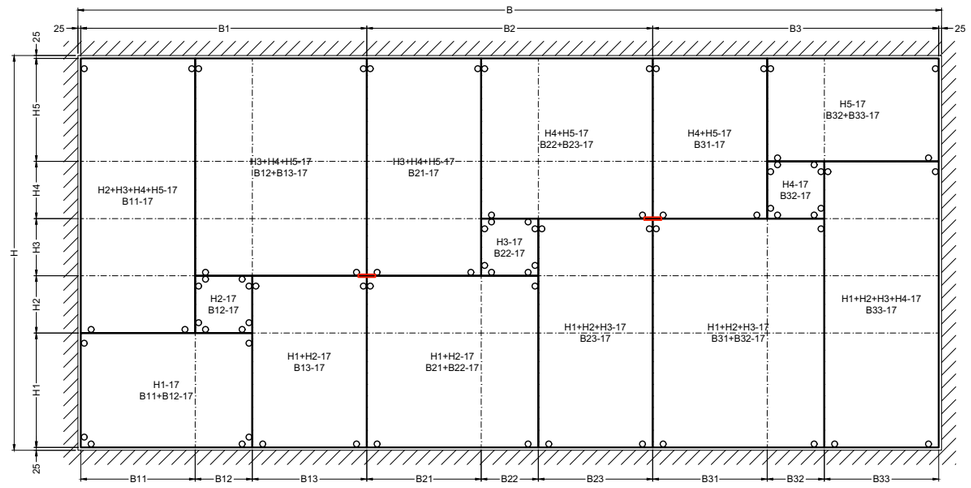


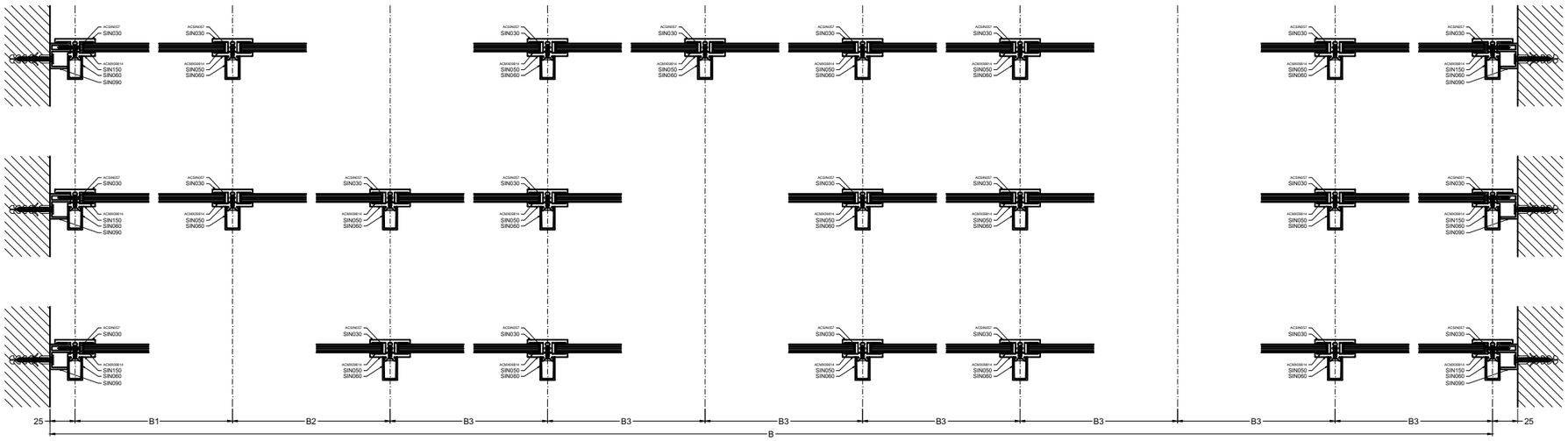


ZAAGTABELLEN-COUPES ET DEBITS-ZUSCHNITTSTABELLEN-FABRICATION CHARTS

WAND004

aliplast member of CORIALIS

# WAND005

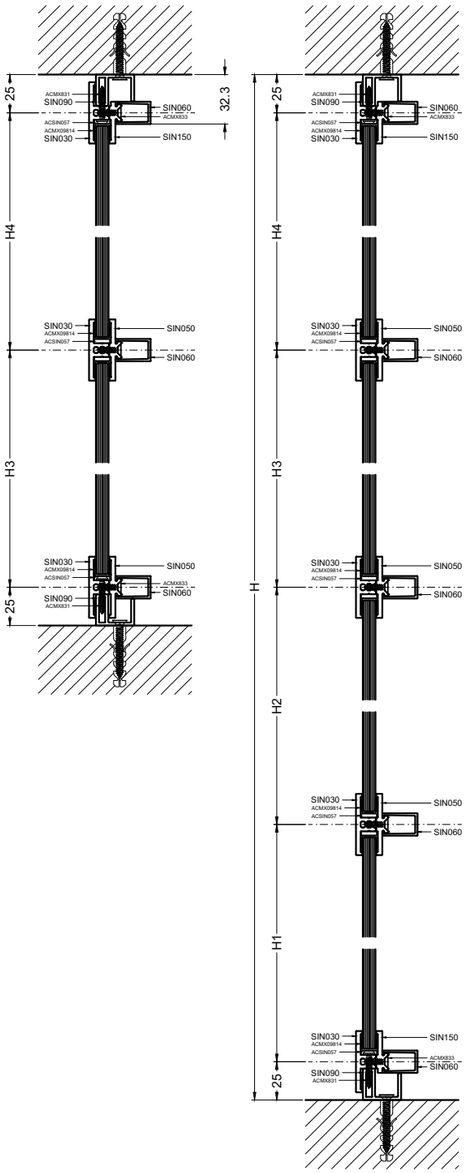


| | | | | |
|---|---|---|---|---|
| SIN090 | | 1 | | H |
| | | 1 | | H1+H2+45.5 |
| | | 1 | | H3+H4+50 |
| | | 1 | | B-35 |
| | | 1 | | B1+B2-17.5 |
| | | 1 | | B3+B4-35 |
| SIN030 | | 1 | | H-10 |
| | | 1 | | B-59 |
| | | 1 | | H3+H4+40 |
| | | 1 | | B3+B4-9 |
| | | 1 | | H-34.5 |
| | | 1 | | B1+B2-9 |
| | | 1 | | H3+H4-9 |
| | | 1 | | H-59 |
| | | 1 | | B1-9 |
| | | 1 | | B2-9 |
| | | 3 | | B3-9 |
| | | 3 | | B4-9 |
| SIN150 | | 1 | | H3+H4+15 |
| | | 1 | | H-35 |
| | | 1 | | B-90 |
| | | 1 | | B1+B2-12.5 |
| | | 1 | | B3+B4-40 |
| SIN060 | | 1 | | H3+H4+15 |
| | | 1 | | H-35 |
| | | 1 | | B-64.6 |
| | | 1 | | B1+B2-12.5 |
| | | 1 | | B3+B4-14.6 |
| SIN050 | | 1 | | H-62.5 |
| | | 1 | | H-90 |
| | | 1 | | H3+H4-40 |
| | | 1 | | B1-40 |
| | | 1 | | B2-40 |
| | | 3 | | B3-40 |
| | | 3 | | B4-40 |
| SIN060 | | 1 | | H-50 |
| | | 1 | | H-64.6 |
| | | 1 | | H3+H4-64.6 |
| | | 1 | | B1-14.6 |
| | | 1 | | B2-14.6 |
| | | 3 | | B3-14.6 |
| | | 3 | | B4-14.6 |

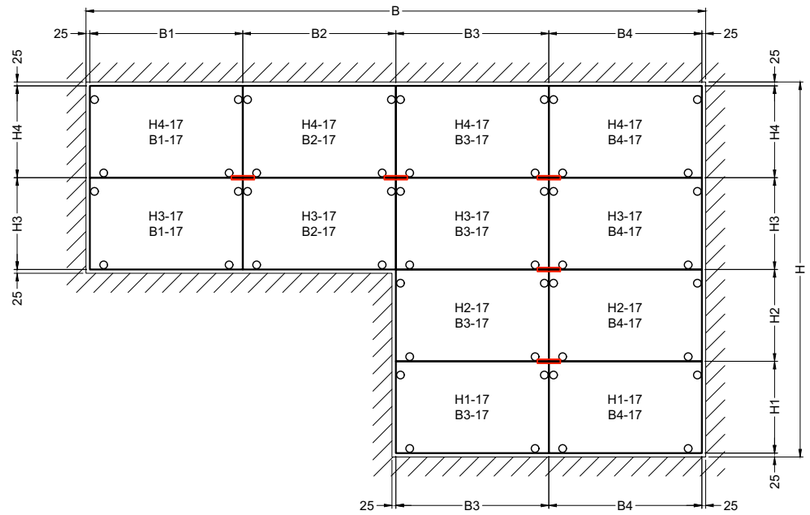


| | |
|---|---|
| ACSIN057 | 48 |
| ACSIN030 | 5 |
| ACMX09814 | 6H+4(H3+H4)+6B+4(B3+B4) |
| ACMX09814 (or ccc / CCCK) OR ACMX09816 | 4H+4(H3+H4)+4B+4(B3+B4) |

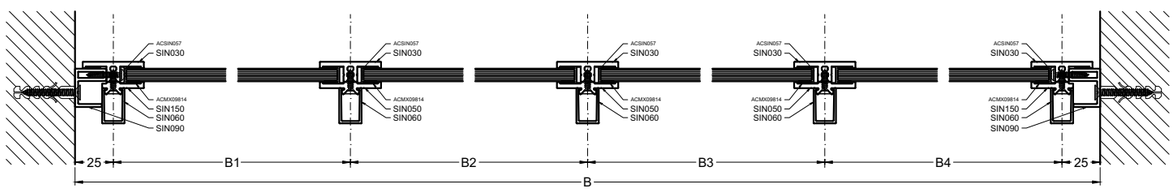


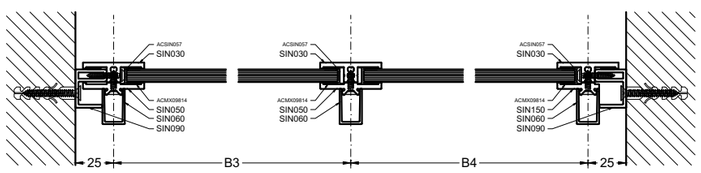

# TAATSDEUR001A

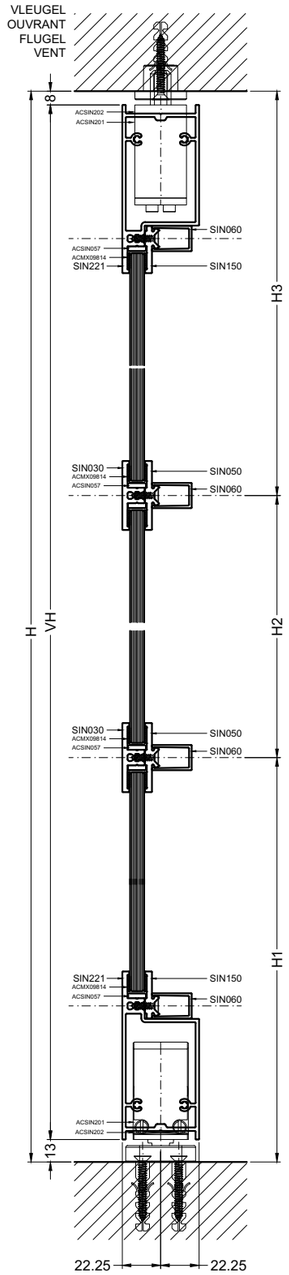


| | | | | |
|---|---|---|---|---|
| BUITENKADER<br>DORMANT<br>BLENDRAHMEN<br>OUTER FRAME | SIN090 | 2 | | H |
| | SIN020 | 1 | | H |
| | SIN021 | 1 | | H |
| | SIN150 | 2 | | H |
| | SIN060 | 2 | | H |

| | | | | |
|---|---|---|---|---|
| VLEUGEL<br>OUVRANT<br>FLUGEL<br>VENT | SIN020 | 1 | | VH |
| | SIN021 | 1 | | VH |
| | SIN221 | 2 | | VB-10 |
| | SIN030 | 2 | | VB-34 |
| | SIN050 | 2 | | VB-10 |
| | SIN060 | 2 | | VB-10 |
| | SIN150 | 2 | | VB-10 |
| | SIN060 | 2 | | VB-10 |
| | SIN150 | 2 | | H1-130.5 |
| | | 2 | | H2-40 |
| | | 2 | | H3-125.5 |
| | SIN060 | 2 | | H1-105.1 |
| | | 2 | | H2-14.6 |
| | | 2 | | H3-100.1 |

| | | |
|---|---|---|
| VB | VLEUGELBREEDTE<br>LARGEUR VANTAIL<br>BREITE FLUGEL<br>WIDTH SASH | B-81 |
| VH | VLEUGELHOOGTE<br>HAUTEUR D'OUVRANT<br>FLUGEL HOHE<br>VENT HEIGHT | H-21 |

| | |
|---|---|
| ACSIN057 | 24 |
| ACMX09814 | 4H+6B |
| ACMX09814<br>OF / OU / ODER / OR<br>ACMX09816 | 2H+6B |

< 100 kg

| | |
|---|---|
| ACSIN201 | 1 |
| ACSIN202 | 2 |

< 150 kg

| | |
|---|---|
| ACSIN204 | 1 |
| ACSIN205 | 1 |
| ACSIN202 | 1 |

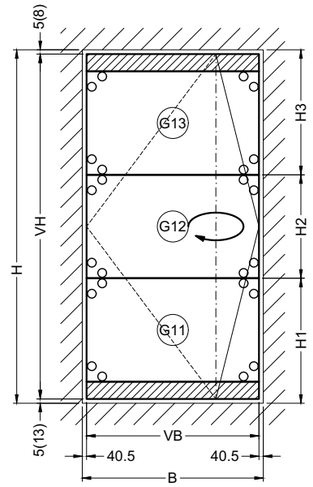


| | | |
|---|---|---|
| VLEUGEL<br>OUVRANT<br>FLUGEL<br>VENT | G11 | H1-107.5<br>VB-42 |
| | G12 | H2-17<br>VB-42 |
| | G13 | H3-102.5<br>VB-42 |

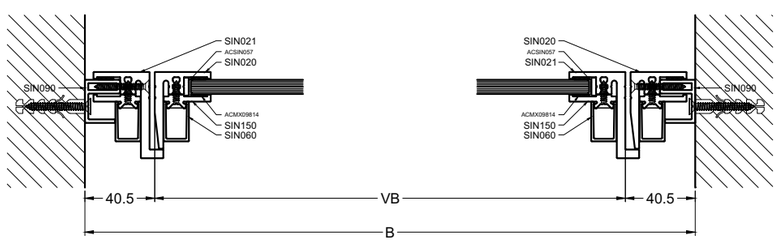


ZAAGTABELLEN-COUPES ET DEBITS-ZUSCHNITTSTABELLEN-FABRICATION CHARTS

# TAATSDEUR001A_SLOT

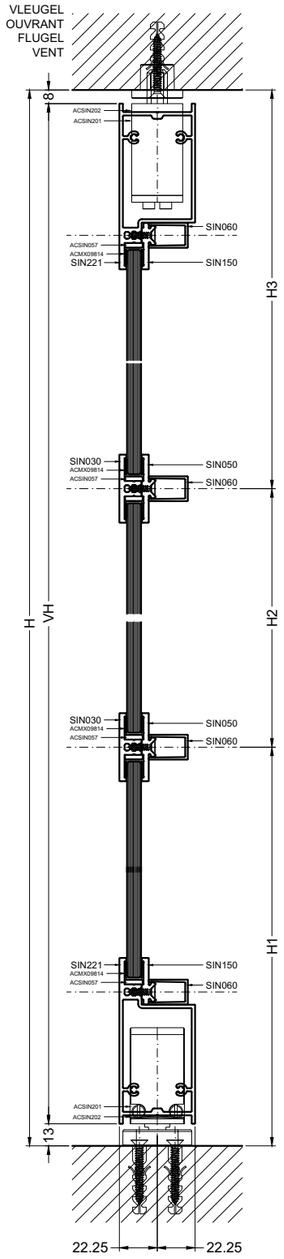


| | | | | |
|---|---|---|---|---|
| BUITENKADER<br>DORMANT<br>BLENDRAHMEN<br>OUTER FRAME | SIN090 | 2 | | H |
| | SIN020 | 1 | | H |
| | SIN021 | 1 | | H |
| | SIN150 | 2 | | H |
| | SIN060 | 2 | | H |

| | | | | |
|---|---|---|---|---|
| VLEUGEL<br>OUVRANT<br>FLUGEL<br>VENT | SIN020 | 1 | | VH |
| | SIN021 | 1 | | VH |
| | SIN221 | 2 | | VB-10 |
| | SIN030 | 2 | | VB-34 |
| | SIN050 | 2 | | VB-10 |
| | SIN060 | 2 | | VB-10 |
| | SIN150 | 2 | | VB-10 |
| | SIN060 | 2 | | VB-10 |
| | SIN121 | 1 | | H2-15 |
| | SIN150 | 2 | | H1-130.5 |
| | | 2 | | H2-40 |
| | | 2 | | H3-125.5 |
| | SIN060 | 2 | | H1-105.1 |
| | | 2 | | H2-14.6 |
| | | 2 | | H3-100.1 |

OVERZICHT SLOTEN, ZIE WERKTEKENINGEN
APERCU SERRURES, VOIR LES DESSINS DE CONSTOUCTION
UEBERSICHT SCHLOESSER, SIEHE KONSTRUKTIONZEICHNUNGEN
OVERVIEW LOCKS, SEE CONSTRUCTION DRAWINGS

| | |
|---|---|
| ACSIN057 | 26 |
| ACMX09814 | 4H+H2+6B |
| ACMX09814<br>OF / OU / OGER / OR<br>ACMX09816 | 2H+6B |

< 100 kg

| | |
|---|---|
| ACSIN201 | 1 |
| ACSIN202 | 2 |

< 150 kg

| | |
|---|---|
| ACSIN204 | 1 |
| ACSIN205 | 1 |
| ACSIN202 | 1 |

| | | |
|---|---|---|
| VB | VLEUGELBREEDTE<br>LARGEUR VANTAIL<br>BREITE FLUGEL<br>WIDTH SASH | B-81 |
| VH | VLEUGELHOOGTE<br>HAUTEUR D'OUVRANT<br>FLUGEL HOHE<br>VENT HEIGHT | H-21 |

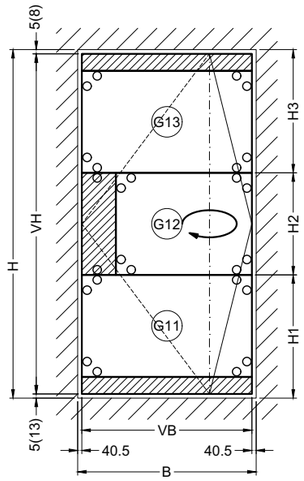


| | | |
|---|---|---|
| VLEUGEL<br>OUVRANT<br>FLUGEL<br>VENT | G11 | H1-107.5<br>VB-42 |
| | G12 | H2-17<br>VB-138 |
| | G13 | H3-102.5<br>VB-42 |

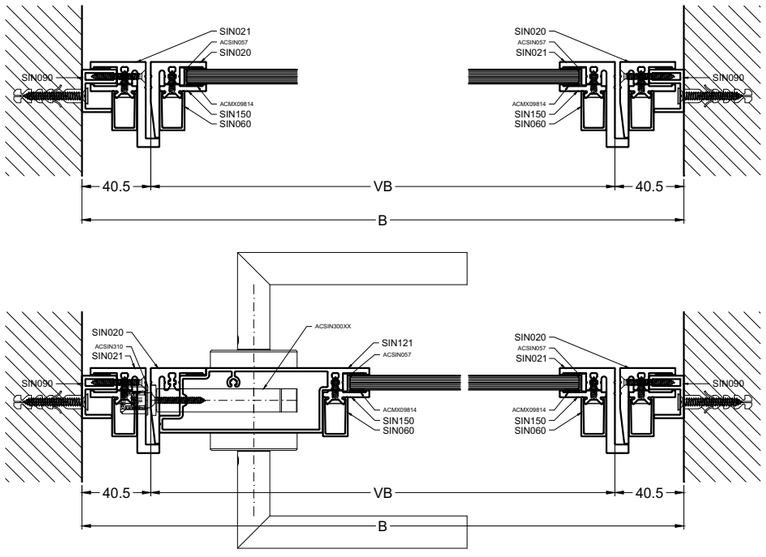

# TAATSDEUR001A2

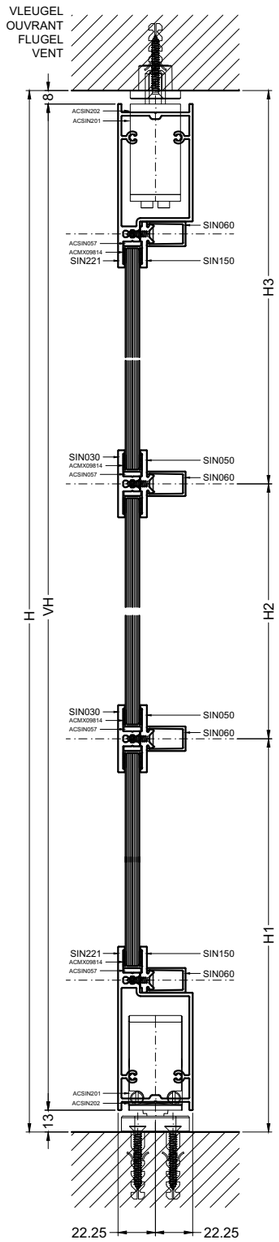


BUITENKADER
DORMANT
BLENDRAHMEN
OUTER FRAME

| | | | | |
|---|---|---|---|---|
| SIN090 | | 2 | | H |
| SIN020 | | 2 | | H |
| SIN150 | | 2 | | H |
| SIN060 | | 2 | | H |

PRIMAIRE VLEUGEL
PREMIERE VANTAIL
GANGFLEUGEL
FIRST VENT

| | | | | |
|---|---|---|---|---|
| SIN020 | | 1 | | VH |
| SIN021 | | 1 | | VH |
| SIN221 | | 2 | | VB2-10 |
| SIN030 | | 2 | | VB2-34 |
| SIN050 | | 2 | | VB2-10 |
| SIN060 | | 2 | | VB2-10 |
| SIN150 | | 2 | | VB2-10 |
| SIN060 | | 2 | | VB2-10 |
| SIN121 | | 1 | | H2-15 |
| SIN150 | | 2 | | H1-130.5 |
| | | 2 | | H2-40 |
| | | 2 | | H3-125.5 |
| SIN060 | | 2 | | H1-105.1 |
| | | 2 | | H2-14.6 |
| | | 2 | | H3-100.1 |

| | | |
|---|---|---|
| VB1<br>VB2 | VLEUGELBREEDTE<br>LARGEUR VANTAIL<br>BREITE FLUGEL<br>WIDTH SASH | B1-3<br>B2-3 |
| VH | VLEUGELHOOGTE<br>HAUTEUR D'OUVRANT<br>FLUGEL HOHE<br>VENT HEIGHT | H-21 |

SECUNDAIRE VLEUGEL
DEUXIEME VANTAIL
STANDFLEUGEL
SECOND VENT

| | | | | |
|---|---|---|---|---|
| SIN021 | | 2 | | VH |
| SIN221 | | 2 | | VB1-10 |
| SIN030 | | 2 | | VB1-34 |
| SIN050 | | 2 | | VB1-10 |
| SIN060 | | 2 | | VB1-10 |
| SIN150 | | 2 | | VB1-10 |
| SIN060 | | 2 | | VB1-10 |
| SIN121 | | 1 | | H2-15 |
| SIN150 | | 2 | | H1-130.5 |
| | | 2 | | H2-40 |
| | | 2 | | H3-125.5 |
| SIN060 | | 2 | | H1-105.1 |
| | | 2 | | H2-14.6 |
| | | 2 | | H3-100.1 |

| | |
|---|---|
| ACSIN057 | 52 |
| ACMX09814 | 6H+2H2+6B |
| ACMX09814<br>OU / OU / ODER / OR<br>ACMX09816 | 4H+6B |

< 100 kg

| | |
|---|---|
| ACSIN201 | 1 |
| ACSIN202 | 2 |

< 150 kg

| | |
|---|---|
| ACSIN204 | 1 |
| ACSIN205 | 1 |
| ACSIN202 | 1 |

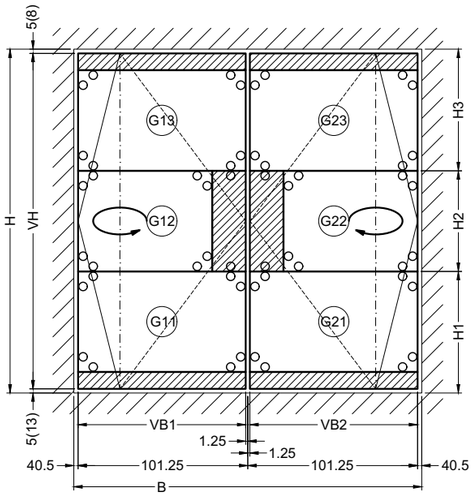


PRIMAIRE VLEUGEL
PREMIERE VANTAIL
GANGFLEUGEL
FIRST VENT

| | |
|---|---|
| G21 | H1-107.5<br>VB2-42 |
| G22 | H2-17<br>VB2-138 |
| G23 | H3-102.5<br>VB2-42 |

SECUNDAIRE VLEUGEL
DEUXIEME VANTAIL
STANDFLEUGEL
SECOND VENT

| | |
|---|---|
| G11 | H1-107.5<br>VB1-42 |
| G12 | H2-17<br>VB1-138 |
| G13 | H3-102.5<br>VB1-42 |

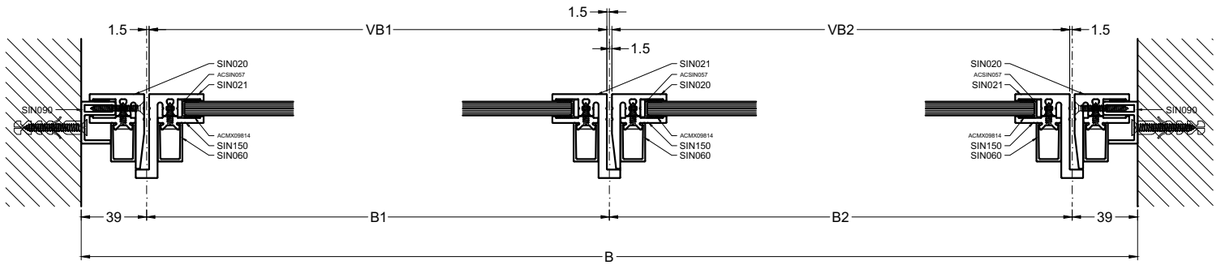


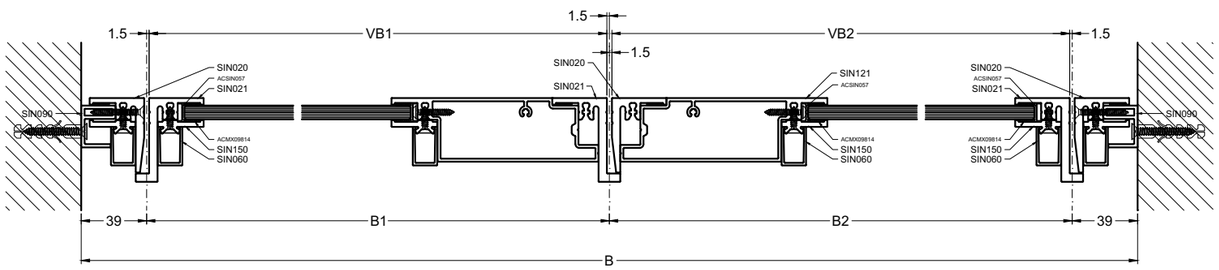


TAATSDEUR001A2

aliplast member of CORIALIS

# TAATSDEUR001A4

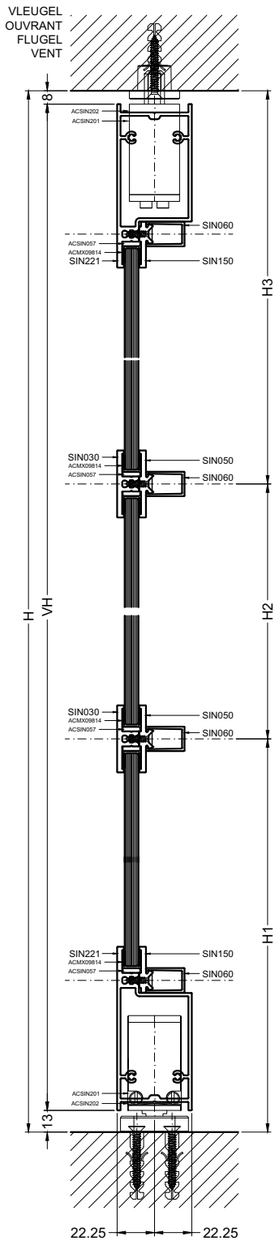


| | | | | |
|---|---|---|---|---|
| BUITENKADER DORMANT BLENDRAHMEN OUTER FRAME | SIN090 | 2 | | H |
| | SIN020 | 1 | | H |
| | SIN021 | 1 | | H |
| | SIN150 | 2 | | H |
| | SIN060 | 2 | | H |

4X VLEUGEL OUVRANT FLUGEL VENT

| | | | | |
|---|---|---|---|---|
| | SIN020 | 1 | | VH |
| | SIN021 | 1 | | VH |
| | SIN221 | 2 | | VB-10 |
| | SIN030 | 2 | | VB-34 |
| | SIN050 | 2 | | VB-10 |
| | SIN060 | 2 | | VB-10 |
| | SIN150 | 2 | | VB-10 |
| | SIN060 | 2 | | VB-10 |
| | SIN150 | 2 | | H1-130.5 |
| | | 2 | | H2-40 |
| | | 2 | | H3-125.5 |
| | SIN060 | 2 | | H1-105.1 |
| | | 2 | | H2-14.6 |
| | | 2 | | H3-100.1 |

< 100 kg

| | |
|---|---|
| ACSIN201 | 1 |
| ACSIN202 | 2 |

< 150 kg

| | |
|---|---|
| ACSIN204 | 1 |
| ACSIN205 | 1 |
| ACSIN202 | 1 |

| | |
|---|---|
| ACSIN057 | 24 |
| ACMX09814 | 10H+6B |
| ACMX09814 / ACMX09816 | 8H+6B |

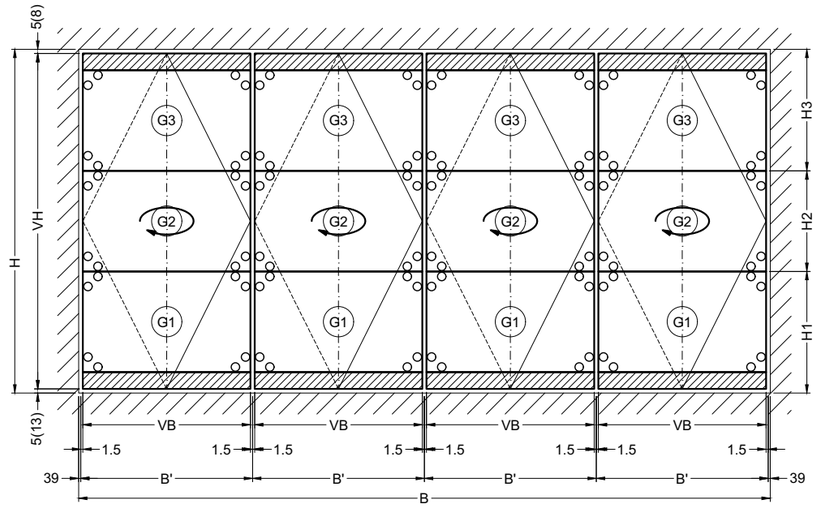


4X VLEUGEL OUVRANT FLUGEL VENT

| | |
|---|---|
| G1 | H1-107.5<br>VB-42 |
| G2 | H2-17<br>VB-42 |
| G3 | H3-102.5<br>VB-42 |

| | | |
|---|---|---|
| VB | VLEUGELBREEDTE<br>LARGEUR VANTAIL<br>BREITE FLUGEL<br>WIDTH SASH | (B-90)/4 |
| VH | VLEUGELHOOGTE<br>HAUTEUR D'OUVRANT<br>FLUGEL HOHE<br>VENT HEIGHT | H-21 |

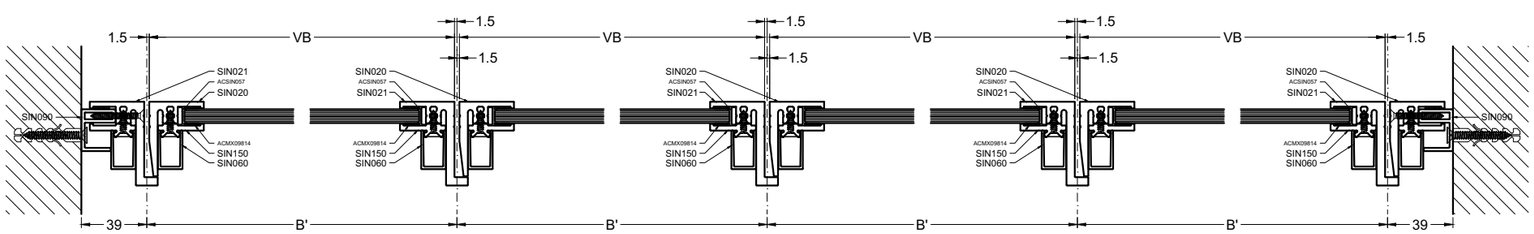

# TAATSDEUR001B

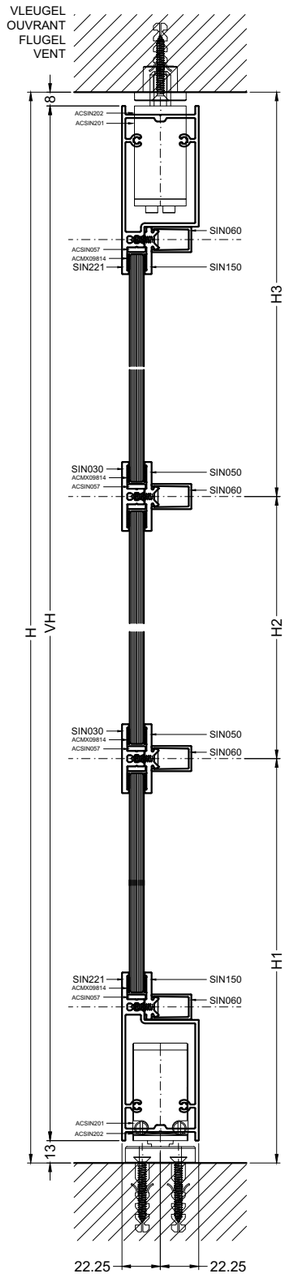


| | | | | |
|---|---|---|---|---|
| BUITENKADER DORMANT BLENDRAHMEN OUTER FRAME (A) | SIN090 | 2 | | H |
| | SIN020 | 2 | | H |
| | SIN150 | 2 | | H |
| | SIN060 | 2 | | H |
| VLEUGEL OUVRANT FLUGEL VENT (A) & (B) | SIN020 | 2 | | VH |
| | SIN221 | 2 | | VB-10 |
| | SIN030 | 2 | | VB-34 |
| | SIN050 | 2 | | VB-10 |
| | SIN060 | 2 | | VB-10 |
| | SIN150 | 2 | | VB-10 |
| | SIN060 | 2 | | VB-10 |
| | SIN150 | 2 | | H1-130.5 |
| | | 2 | | H2-40 |
| | | 2 | | H3-125.5 |
| | SIN060 | 2 | | H1-105.1 |
| | | 2 | | H2-14.6 |
| | | 2 | | H3-100.1 |

| | | | |
|---|---|---|---|
| VB | VLEUGELBREEDTE<br>LARGEUR VANTAIL<br>BREITE FLUGEL<br>WIDTH SASH | (A)<br>(B) | B-85<br>B-10 |
| VH | VLEUGELHOOGTE<br>HAUTEUR D'OUVRANT<br>FLUGEL HOHE<br>VENT HEIGHT | | H-21 |

| | |
|---|---|
| ○ ACSIN057 | 24 |
| (A) ACMX09814 | 4H+6B |
| (B) ACMX09814 | 2H+6B |
| (A) ACMX09814 or ACMX09815 OR (B) ACMX09816 | 2H+6B |

< 100 kg

| | |
|---|---|
| ACSIN201 | 1 |
| ACSIN202 | 2 |

< 150 kg

| | |
|---|---|
| ACSIN204 | 1 |
| ACSIN205 | 1 |
| ACSIN202 | 1 |

| | |
|---|---|
| G11 | H1-107.5<br>VB-42 |
| G12 | H2-17<br>VB-42 |
| G13 | H3-102.5<br>VB-42 |

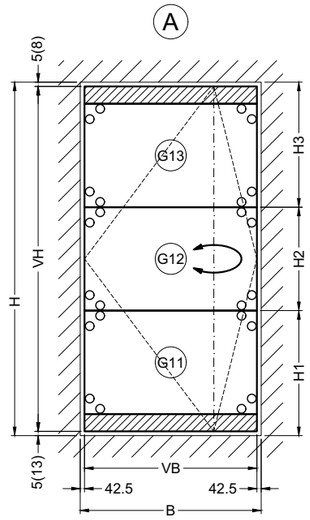


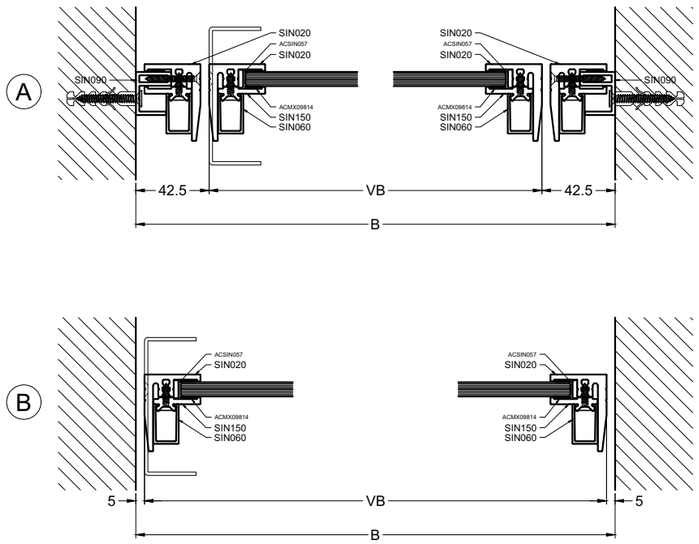


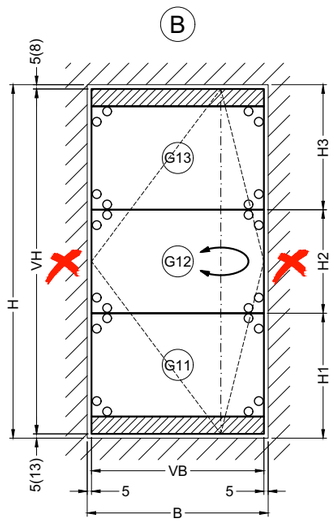


TAATSDEUR001B

# TAATSDEUR001B2

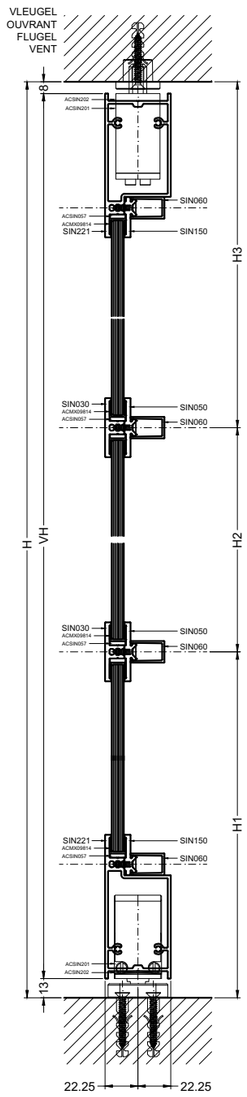


| | | | | | |
|---|---|---|---|---|---|
| BUITENKADER<br>DORMANT<br>BLENDRAHMEN<br>OUTER FRAME<br>Ⓐ | SIN090 | | 2 | | H |
| | SIN020 | | 2 | | H |
| | SIN150 | | 2 | | H |
| | SIN060 | | 2 | | H |

| | | | | | |
|---|---|---|---|---|---|
| PRIMAIRE VLEUGEL<br>PREMIERE VANTAIL<br>GANGFLEUGEL<br>FIRST VENT<br>Ⓐ<br>&<br>Ⓑ | SIN020 | | 2 | | VH |
| | SIN221 | | 2 | | VB2-10 |
| | SIN030 | | 2 | | VB2-34 |
| | SIN050 | | 2 | | VB2-10 |
| | SIN060 | | 2 | | VB2-10 |
| | SIN150 | | 2 | | VB2-10 |
| | SIN060 | | 2 | | VB2-10 |
| | SIN150 | | 2 | | H1-130.5 |
| | | | 2 | | H2-40 |
| | | | 2 | | H3-125.5 |
| | SIN060 | | 2 | | H1-105.1 |
| | | | 2 | | H2-14.6 |
| | | | 2 | | H3-100.1 |

| | | | | | |
|---|---|---|---|---|---|
| SECUNDAIRE VLEUGEL<br>DEUXIEME VANTAIL<br>STANDFLEUGEL<br>SECOND VENT<br>Ⓐ<br>&<br>Ⓑ | SIN020 | | 2 | | VH |
| | SIN221 | | 2 | | VB1-10 |
| | SIN030 | | 2 | | VB1-34 |
| | SIN050 | | 2 | | VB1-10 |
| | SIN060 | | 2 | | VB1-10 |
| | SIN150 | | 2 | | VB1-10 |
| | SIN060 | | 2 | | VB1-10 |
| | SIN150 | | 2 | | H1-130.5 |
| | | | 2 | | H2-40 |
| | | | 2 | | H3-125.5 |
| | SIN060 | | 2 | | H1-105.1 |
| | | | 2 | | H2-14.6 |
| | | | 2 | | H3-100.1 |

| | |
|---|---|
| ○ ACSIN057 | 48 |
| Ⓐ ACMX09814 | 6H+6B |
| Ⓑ ACMX09814 | 4H+6B |
| Ⓐ ACMX09814<br>Ⓑ ACMX09816 | 4H+6B |

| | | | |
|---|---|---|---|
| VB1<br>VB2 | VLEUGELBREEDTE<br>LARGEUR VANTAIL<br>BREITE FLUGEL<br>WIDTH SASH | Ⓐ<br>Ⓑ<br>Ⓐ<br>Ⓑ | B1-45<br>B1-7.5<br>B2-45<br>B2-7.5 |
| VH | VLEUGELHOOGTE<br>HAUTEUR D'OUVRANT<br>FLUGEL HOHE<br>VENT HEIGHT | | H-21 |

< 100 kg

| | |
|---|---|
| ACSIN201 | 2 |
| ACSIN202 | 4 |

< 150 kg

| | |
|---|---|
| ACSIN204 | 2 |
| ACSIN205 | 2 |
| ACSIN202 | 2 |

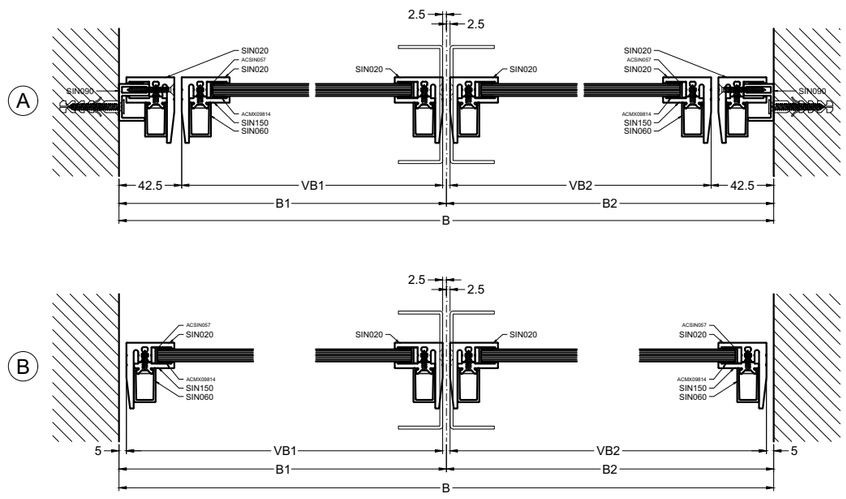


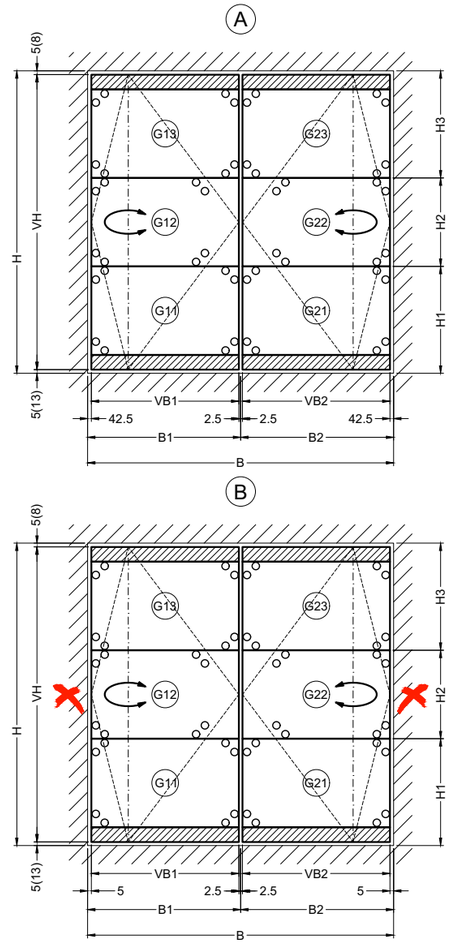


| | | |
|---|---|---|
| PRIMAIRE VLEUGEL<br>PREMIERE VANTAIL<br>GANGFLEUGEL<br>FIRST VENT | G21 | H1-107.5<br>VB2-42 |
| | G22 | H2-17<br>VB2-42 |
| | G23 | H3-102.5<br>VB2-42 |

| | | |
|---|---|---|
| SECUNDAIRE VLEUGEL<br>DEUXIEME VANTAIL<br>STANDFLEUGEL<br>SECOND VENT | G11 | H1-107.5<br>VB1-42 |
| | G12 | H2-17<br>VB2-42 |
| | G13 | H3-102.5<br>VB1-42 |

# TAATSDEUR001D2

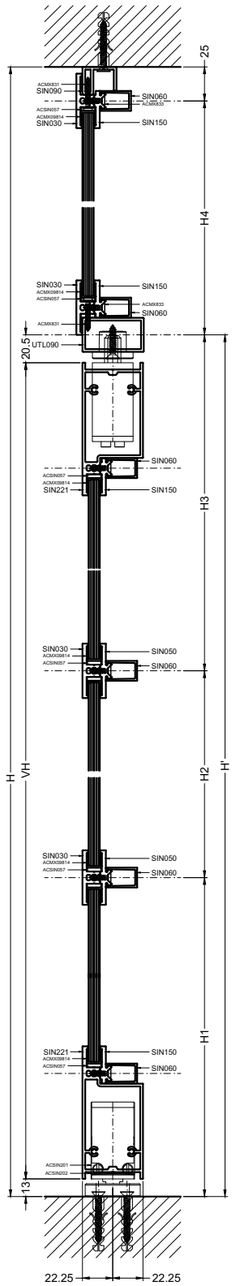


VAST ONDERDEEL
PARTIE FIXE
FESTER TEIL
FIXED PART

Ⓐ

| | | | | |
|---|---|---|---|---|
| SIN090 | | 2 | | H'-12.5 |
| SIN020 | | 2 | | H'-12.5 |
| SIN150 | | 2 | | H'-12.5 |
| SIN060 | | 2 | | H'-12.5 |

Ⓐ & Ⓑ

| | | | | |
|---|---|---|---|---|
| SIN090 | | 2 | | H-H'-12.5 |
| | | 1 | | B-35 |
| UTL090 | | 1 | | B |
| SIN030 | | 2 | | B-10 |
| | | 3 | | H-H'-54 |
| SIN150 | | 2 | | B-35 |
| | | 2 | | H-H'-85 |
| SIN060 | | 2 | | B-35 |
| | | 2 | | H-H'-59.6 |
| SIN050 | | 1 | | H-H'-85 |
| SIN060 | | 1 | | H-H'-59.6 |

| | | | |
|---|---|---|---|
| VB1 | VLEUGELBREEDTE<br>LARGEUR VANTAIL<br>BREITE FLUGEL<br>WIDTH SASH | Ⓐ | B1-45 |
| | | Ⓑ | B1-7.5 |
| VB2 | | Ⓐ | B2-45 |
| | | Ⓑ | B2-7.5 |
| VH | VLEUGELHOOGTE<br>HAUTEUR D'OUVRANT<br>FLUGEL HOHE<br>VENT HEIGHT | | H-H4-58.5 |
| H' | HOOGTE<br>HAUTEUR<br>HOHE<br>HEIGHT | | H1+H2+H3 |

PRIMAIRE VLEUGEL
PREMIERE VANTAIL
GANGFLEUGEL
FIRST VENT

Ⓐ & Ⓑ

| | | | | |
|---|---|---|---|---|
| SIN020 | | 2 | | VH |
| SIN221 | | 2 | | VB2-10 |
| SIN030 | | 2 | | VB2-34 |
| SIN050 | | 2 | | VB2-10 |
| SIN060 | | 2 | | VB2-10 |
| SIN150 | | 2 | | VB2-10 |
| SIN060 | | 2 | | VB2-10 |
| SIN150 | | 2 | | H1-130.5 |
| | | 2 | | H2-40 |
| | | 2 | | H3-138 |
| SIN060 | | 2 | | H1-105.1 |
| | | 2 | | H2-14.6 |
| | | 2 | | H3-112.6 |

SECUNDAIRE VLEUGEL
DEUXIEME VANTAIL
STANDFLEUGEL
SECOND VENT

Ⓐ & Ⓑ

| | | | | |
|---|---|---|---|---|
| SIN020 | | 2 | | VH |
| SIN221 | | 2 | | VB1-10 |
| SIN030 | | 2 | | VB1-34 |
| SIN050 | | 2 | | VB1-10 |
| SIN060 | | 2 | | VB1-10 |
| SIN150 | | 2 | | VB1-10 |
| SIN060 | | 2 | | VB1-10 |
| SIN150 | | 2 | | H1-130.5 |
| | | 2 | | H2-40 |
| | | 2 | | H3-138 |
| SIN060 | | 2 | | H1-105.1 |
| | | 2 | | H2-14.6 |
| | | 2 | | H3-112.6 |

| | |
|---|---|
| ○ ACSIN057 | 60 |
| ✚ ACSIN101 | 2 |
| Ⓐ ACMX09814 | 6H+10B |
| Ⓑ ACMX09814 | 4H+2H4+10B |
| Ⓐ ACMX09814<br>Ⓑ ACMX09816 | 4H+8B |

< 100 kg

| | |
|---|---|
| ACSIN201 | 2 |
| ACSIN202 | 4 |

< 150 kg

| | |
|---|---|
| ACSIN204 | 2 |
| ACSIN205 | 2 |
| ACSIN202 | 2 |

VAST ONDERDEEL
PARTIE FIXE
FESTER TEIL
FIXED PART

| | |
|---|---|
| G14 | H4-37<br>B1-42 |
| G24 | H4-37<br>B2-42 |

PRIMAIRE VLEUGEL
PREMIERE VANTAIL
GANGFLEUGEL
FIRST VENT

| | |
|---|---|
| G21 | H1-107.5<br>VB2-42 |
| G22 | H2-17<br>VB2-42 |
| G23 | H3-115<br>VB2-42 |

SECUNDAIRE VLEUGEL
DEUXIEME VANTAIL
STANDFLEUGEL
SECOND VENT

| | |
|---|---|
| G11 | H1-107.5<br>VB1-42 |
| G12 | H2-17<br>VB1-42 |
| G13 | H3-115<br>VB1-42 |

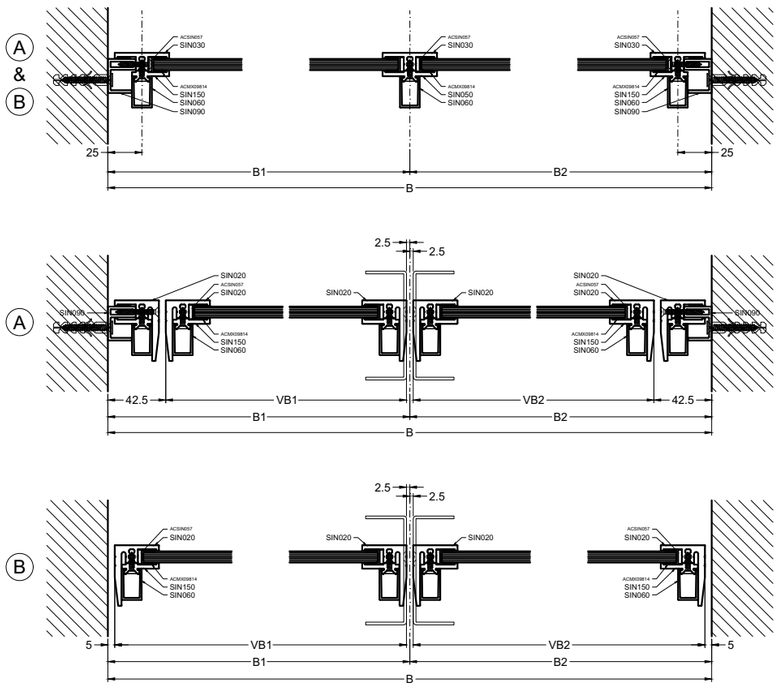


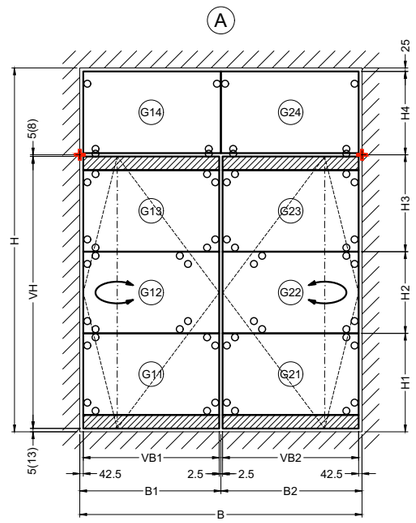


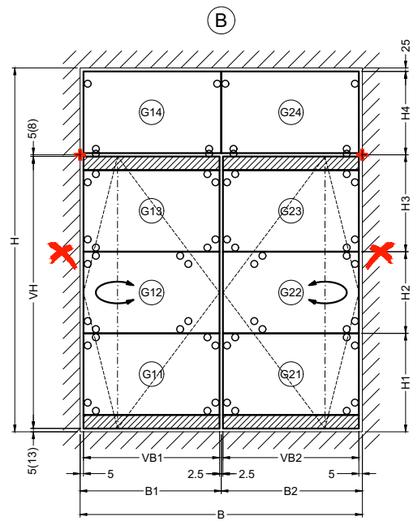


ZAAGTABELLEN-COUPES ET DEBITS-ZUSCHNITTSTABELLEN-FABRICATION CHARTS

# TAATSDEUR001D3

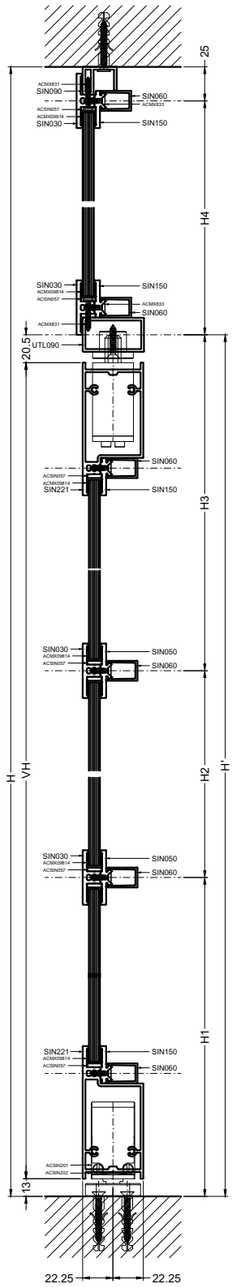


| VAST ONDERDEEL PARTIE FIXE FESTER TEIL FIXED PART | | | | |
|---|---|---|---|---|
| Ⓐ | SIN090 | 2 | | H'-12.5 |
| | SIN020 | 2 | | H'-12.5 |
| | SIN150 | 2 | | H'-12.5 |
| | SIN060 | 2 | | H'-12.5 |

| Ⓐ & Ⓑ | | | | |
|---|---|---|---|---|
| | SIN090 | 2 | | H-H'-12.5 |
| | | 1 | | B-35 |
| | UTL090 | 1 | | B |
| | SIN030 | 2 | | B-10 |
| | | 2 | | H-H'-54 |
| | SIN150 | 2 | | B-35 |
| | | 2 | | H-H'-85 |
| | SIN060 | 2 | | B-35 |
| | | 2 | | H-H'-59.6 |

| | | | |
|---|---|---|---|
| VB | VLEUGELBREEDTE<br>LARGEUR VANTAIL<br>BREITE FLUGEL<br>WIDTH SASH | Ⓐ<br>Ⓑ | B-85<br>B-10 |
| VH | VLEUGELHOOGTE<br>HAUTEUR D'OUVRANT<br>FLUGEL HOHE<br>VENT HEIGHT | | H-H4-58.5 |
| H' | HOOGTE<br>HAUTEUR<br>HOHE<br>HEIGHT | | H1+H2+H3 |

| VLEUGEL VANTAIL FLEUGEL VENT Ⓐ & Ⓑ | | | | |
|---|---|---|---|---|
| | SIN020 | 2 | | VH |
| | SIN221 | 2 | | VB-10 |
| | SIN030 | 2 | | VB-34 |
| | SIN050 | 2 | | VB-10 |
| | SIN060 | 2 | | VB-10 |
| | SIN150 | 2 | | VB-10 |
| | SIN060 | 2 | | VB-10 |
| | SIN150 | 2 | | H1-130.5 |
| | | 2 | | H2-40 |
| | | 2 | | H3-138 |
| | SIN060 | 2 | | H1-105.1 |
| | | 2 | | H2-14.6 |
| | | 2 | | H3-112.6 |

| | |
|---|---|
| ACSIN057 | 30 |
| ACSIN101 | 2 |
| Ⓐ ACMX09814 | 4H+5B |
| Ⓑ ACMX09814 | 2H+H4+5B |
| Ⓐ ACMX09814<br>or (Ⓐ+Ⓑ) ACMX09816<br>Ⓑ ACMX09816 | 2H+4B |

< 100 kg

| | |
|---|---|
| ACSIN201 | 1 |
| ACSIN202 | 2 |

< 150 kg

| | |
|---|---|
| ACSIN204 | 1 |
| ACSIN205 | 1 |
| ACSIN202 | 1 |

| VAST ONDERDEEL PARTIE FIXE FESTER TEIL FIXED PART | |
|---|---|
| G14 | H4-37<br>B-67 |

| VLEUGEL VANTAIL FLEUGEL VENT | |
|---|---|
| G11 | H1-107.5<br>VB2-42 |
| G12 | H2-17<br>VB2-42 |
| G13 | H3-115<br>VB2-42 |

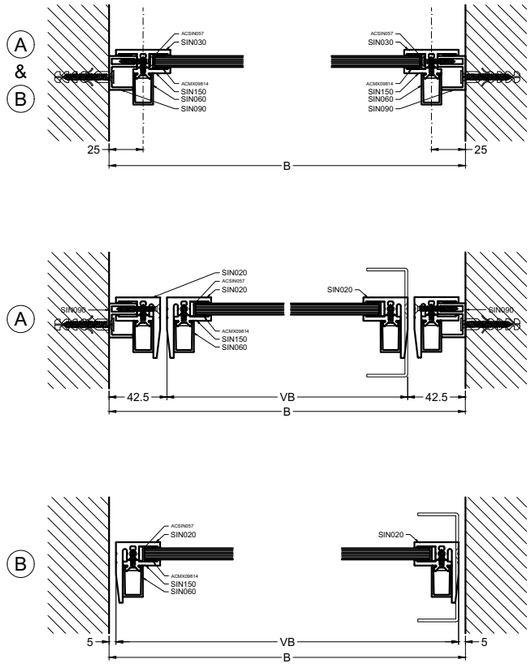


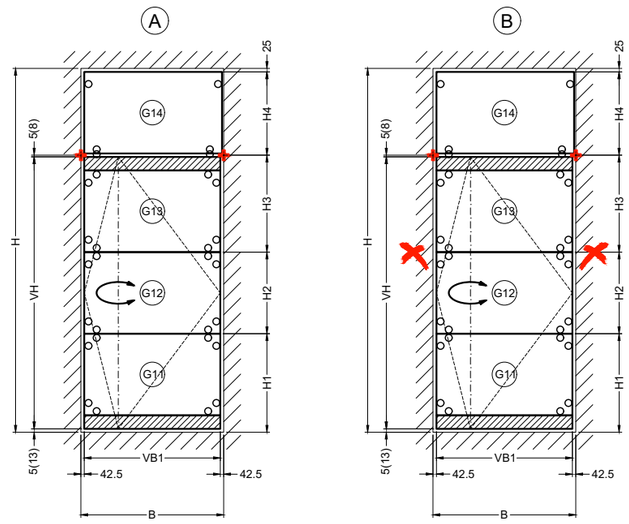

# TAATSDEUR002A

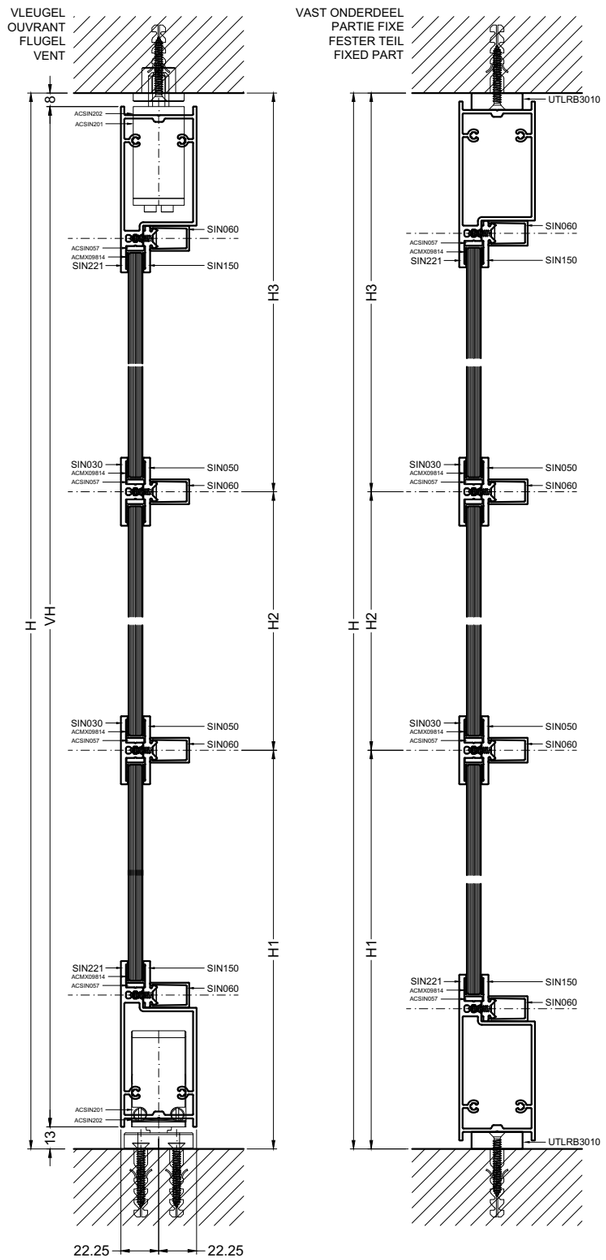


VAST ONDERDEEL
PARTIE FIXE
FESTER TEIL
FIXED PART

| | | | | |
|---|---|---|---|---|
| SIN090 | | 1 | | H |
| SIN020 | | 1 | | H |
| SIN150 | | 1 | | H |
| SIN060 | | 1 | | H |
| UTL090 | | 1 | | H |
| SIN021 | | 1 | | H |
| SIN020 | | 1 | | H |
| SIN221 | | 2 | | B2+1 |
| UTLRB3010 | | 2 | | B2+1 |
| SIN030 | | 2 | | B2-23 |
| SIN050 | | 2 | | B2+1 |
| SIN060 | | 2 | | B2+1 |
| SIN150 | | 2 | | B2+1 |
| | | 2 | | H1-122.5 |
| | | 2 | | H2-40 |
| | | 2 | | H3-122.5 |
| SIN060 | | 2 | | B2+1 |
| | | 2 | | H1-97.1 |
| | | 2 | | H2-14.6 |
| | | 2 | | H3-97.1 |

| | | |
|---|---|---|
| VB | VLEUGELBREEDTE<br>LARGEUR VANTAIL<br>BREITE FLUGEL<br>WIDTH SASH | B1-3 |
| VH | VLEUGELHOOGTE<br>HAUTEUR D'OUVRANT<br>FLUGEL HOHE<br>VENT HEIGHT | H-21 |

VLEUGEL
OUVRANT
FLUGEL
VENT

| | | | | |
|---|---|---|---|---|
| SIN020 | | 1 | | VH |
| SIN021 | | 1 | | VH |
| SIN221 | | 2 | | VB-10 |
| SIN030 | | 2 | | VB-34 |
| SIN050 | | 2 | | VB-10 |
| SIN060 | | 2 | | VB-10 |
| SIN150 | | 2 | | VB-10 |
| SIN060 | | 2 | | VB-10 |
| SIN150 | | 2 | | H1-130.5 |
| | | 2 | | H2-40 |
| | | 2 | | H3-125.5 |
| SIN060 | | 2 | | H1-105.1 |
| | | 2 | | H2-14.6 |
| | | 2 | | H3-100.1 |

| | |
|---|---|
| ACSIN057 | 38 |
| ACMX09814 | 5H+6B |
| ACMX09814<br>OF / OU / ODER / OR<br>ACMX09816 | 4H+6B |

< 100 kg

| | |
|---|---|
| ACSIN201 | 1 |
| ACSIN202 | 2 |

< 150 kg

| | |
|---|---|
| ACSIN204 | 1 |
| ACSIN205 | 1 |
| ACSIN202 | 1 |

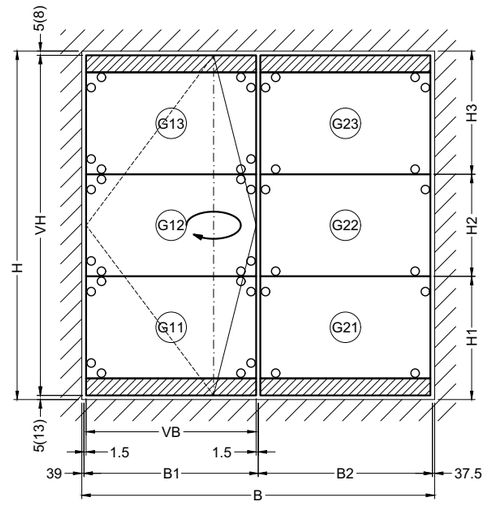


VAST ONDERDEEL
PARTIE FIXE
FESTER TEIL
FIXED PART

| | |
|---|---|
| G21 | H1-99.5<br>B2-31 |
| G22 | H2-17<br>B2-31 |
| G23 | H3-99.5<br>B2-31 |

VLEUGEL
OUVRANT
FLUGEL
VENT

| | |
|---|---|
| G11 | H1-107.5<br>VB-42 |
| G12 | H2-17<br>VB-42 |
| G13 | H3-102.5<br>VB-42 |

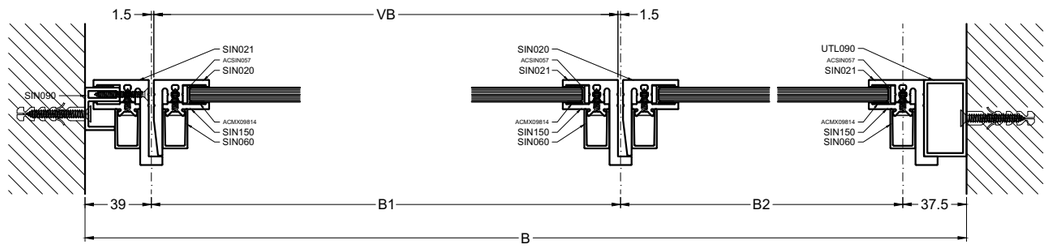


ZAAGTABELLEN-COUPES ET DEBITS-ZUSCHNITTSTABELLEN-FABRICATION CHARTS

# TAATSDEUR002A_SLOT

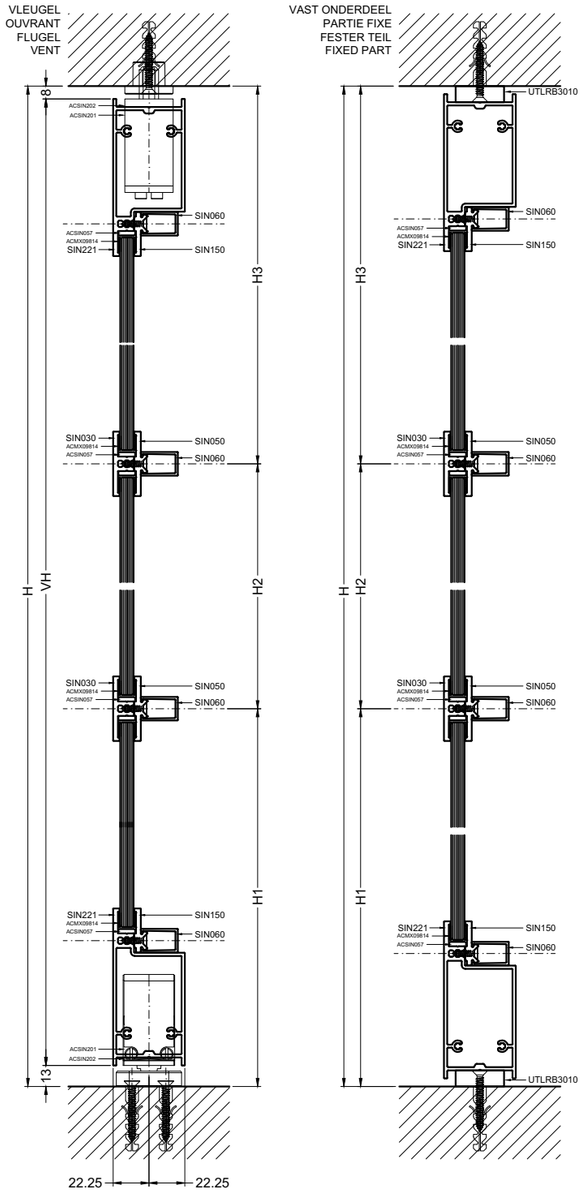


VAST ONDERDEEL
PARTIE FIXE
FESTER TEIL
FIXED PART

| | | | | |
|---|---|---|---|---|
| SIN090 | | 1 | | H |
| SIN020 | | 1 | | H |
| SIN150 | | 1 | | H |
| SIN060 | | 1 | | H |
| UTL090 | | 1 | | H |
| SIN021 | | 1 | | H |
| SIN020 | | 1 | | H |
| SIN221 | | 2 | | B2+1 |
| UTLRB3010 | | 2 | | B2+1 |
| SIN030 | | 2 | | B2-23 |
| SIN050 | | 2 | | B2+1 |
| SIN060 | | 2 | | B2+1 |
| SIN150 | | 2 | | B2+1 |
| | | 2 | | H1-122.5 |
| | | 2 | | H2-40 |
| | | 2 | | H3-122.5 |
| SIN060 | | 2 | | B2+1 |
| | | 2 | | H1-97.1 |
| | | 2 | | H2-14.6 |
| | | 2 | | H3-97.1 |

| | | |
|---|---|---|
| VB | VLEUGELBREEDTE<br>LARGEUR VANTAIL<br>BREITE FLUGEL<br>WIDTH SASH | B1-3 |
| VH | VLEUGELHOOGTE<br>HAUTEUR D'OUVRANT<br>FLUGEL HOHE<br>VENT HEIGHT | H-21 |

VLEUGEL
OUVRANT
FLUGEL
VENT

| | | | | |
|---|---|---|---|---|
| SIN020 | | 1 | | VH |
| SIN021 | | 1 | | VH |
| SIN221 | | 2 | | VB-10 |
| SIN030 | | 2 | | VB-34 |
| SIN050 | | 2 | | VB-10 |
| SIN060 | | 2 | | VB-10 |
| SIN150 | | 2 | | VB-10 |
| SIN060 | | 2 | | VB-10 |
| SIN121 | | 1 | | H2-15 |
| SIN150 | | 2 | | H1-130.5 |
| | | 2 | | H2-40 |
| | | 2 | | H3-125.5 |
| SIN060 | | 2 | | H1-105.1 |
| | | 2 | | H2-14.6 |
| | | 2 | | H3-100.1 |

| | |
|---|---|
| O ACSIN057 | 40 |
| ACMX09814 | 5H+1H2+6B |
| ACMX09814<br>OR ACCSIN038<br>ACMX09816 | 4H+6B |

< 100 kg

| | |
|---|---|
| ACSIN201 | 1 |
| ACSIN202 | 2 |

< 150 kg

| | |
|---|---|
| ACSIN204 | 1 |
| ACSIN205 | 1 |
| ACSIN202 | 1 |

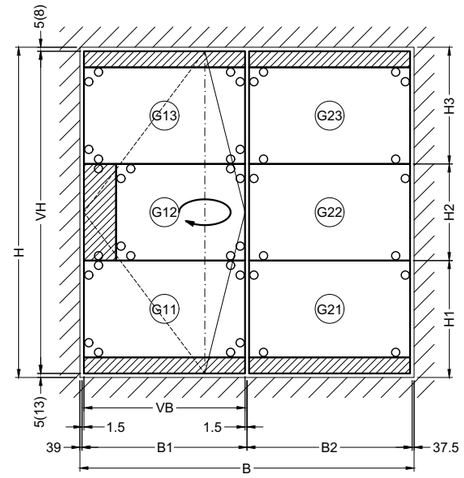


VAST ONDERDEEL
PARTIE FIXE
FESTER TEIL
FIXED PART

| | |
|---|---|
| G21 | H1-99.5<br>B2-31 |
| G22 | H2-17<br>B2-31 |
| G23 | H3-99.5<br>B2-31 |

VLEUGEL
OUVRANT
FLUGEL
VENT

| | |
|---|---|
| G11 | H1-107.5<br>VB-42 |
| G12 | H2-17<br>VB-138 |
| G13 | H3-102.5<br>VB-42 |

OVERZICHT SLOTEN, ZIE WERKTEKENINGEN
APERCU SERRURES, VOIR LES DESSINS DE CONSTOUCTION
UEBERSICHT SCHLOESSER, SIEHE KONSTRUKTIONZEICHNUNGEN
OVERVIEW LOCKS, SEE CONSTRUCTION DRAWINGS

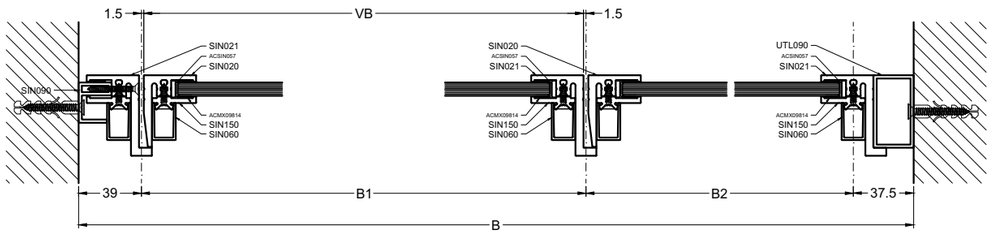


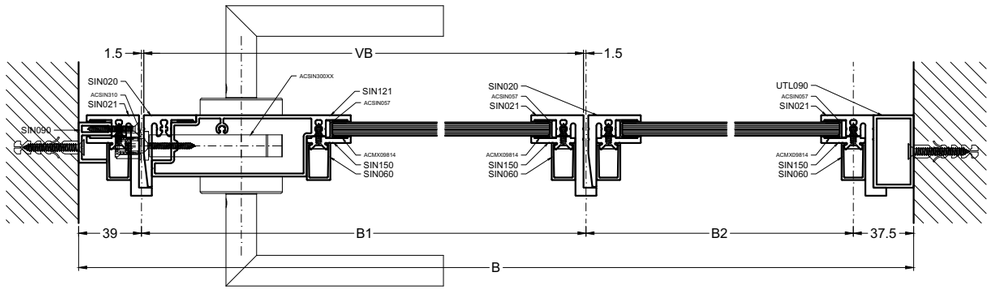

# TAATSDEUR002B

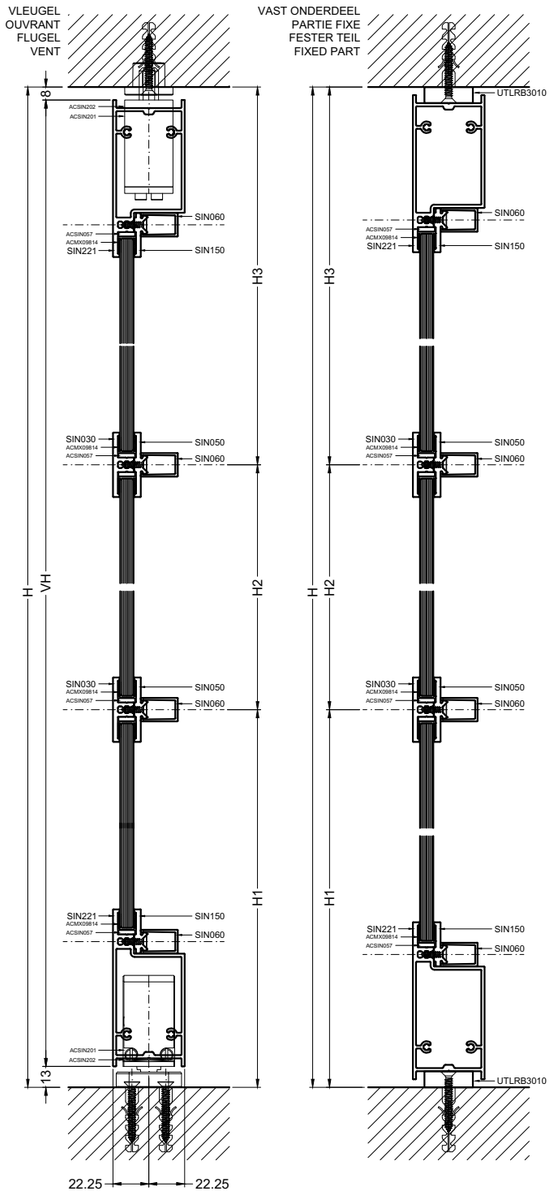


VAST ONDERDEEL
PARTIE FIXE
FESTER TEIL
FIXED PART

| | | | | |
|---|---|---|---|---|
| A | SIN090 | 1 | | H |
| | SIN020 | 1 | | H |
| | SIN150 | 1 | | H |
| | SIN060 | 1 | | H |
| A & B | UTL090 | 1 | | H |
| | SIN021 | 1 | | H |
| | SIN020 | 1 | | H |
| | SIN221 | 2 | | B2 |
| | UTLRB3010 | 2 | | B2 |
| | SIN030 | 2 | | B2-24 |
| | SIN050 | 2 | | B2 |
| | SIN060 | 2 | | B2 |
| | SIN150 | 2 | | B2 |
| | | 2 | | H1-122.5 |
| | | 2 | | H2-40 |
| | | 2 | | H3-122.5 |
| | SIN060 | 2 | | B2 |
| | | 2 | | H1-97.1 |
| | | 2 | | H2-14.6 |
| | | 2 | | H3-97.1 |

| | | |
|---|---|---|
| VB | VLEUGELBREEDTE<br>LARGEUR VANTAIL<br>BREITE FLUGEL<br>WIDTH SASH | B1-5 |
| VH | VLEUGELHOOGTE<br>HAUTEUR D'OUVRANT<br>FLUGEL HOHE<br>VENT HEIGHT | H-21 |

VLEUGEL
OUVRANT
FLUGEL
VENT

| | | | | |
|---|---|---|---|---|
| A & B | SIN020 | 2 | | VH |
| | SIN221 | 2 | | VB-10 |
| | SIN030 | 2 | | VB-34 |
| | SIN050 | 2 | | VB-10 |
| | SIN060 | 2 | | VB-10 |
| | SIN150 | 2 | | VB-10 |
| | SIN060 | 2 | | VB-10 |
| | SIN150 | 2 | | H1-130.5 |
| | | 2 | | H2-40 |
| | | 2 | | H3-125.5 |
| | SIN060 | 2 | | H1-105.1 |
| | | 2 | | H2-14.6 |
| | | 2 | | H3-100.1 |

| | |
|---|---|
| ACSIN057 | 38 |
| ACMX09814 | 5H+6B |
| ACMX09814<br>DF / DU / ODB / OR<br>ACMX09816 | 4H+6B |

< 100 kg

| | |
|---|---|
| ACSIN201 | 1 |
| ACSIN202 | 2 |

< 150 kg

| | |
|---|---|
| ACSIN204 | 1 |
| ACSIN205 | 1 |
| ACSIN202 | 1 |

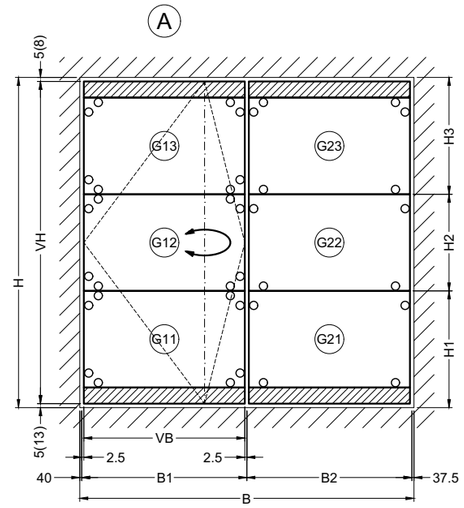


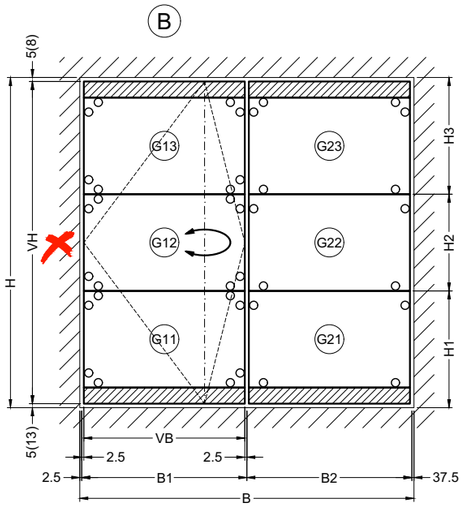


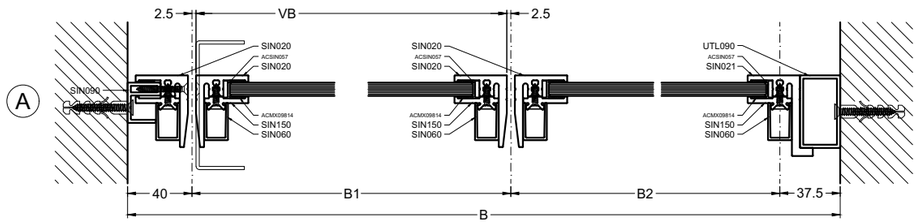


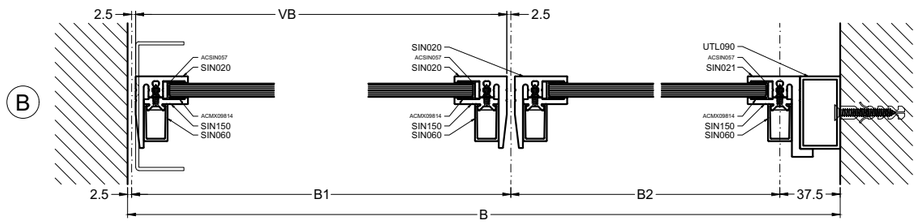


VAST ONDERDEEL
PARTIE FIXE
FESTER TEIL
FIXED PART

| | |
|---|---|
| G21 | H1-99.5<br>B2-32 |
| G22 | H2-17<br>B2-32 |
| G23 | H3-99.5<br>B2-32 |

VLEUGEL
OUVRANT
FLUGEL
VENT

| | |
|---|---|
| G11 | H1-107.5<br>VB-42 |
| G12 | H2-17<br>VB-42 |
| G13 | H3-102.5<br>VB-42 |

TAATSDEUR002B

aliplast
member of
CORIALIS

# TAATSDEUR002C

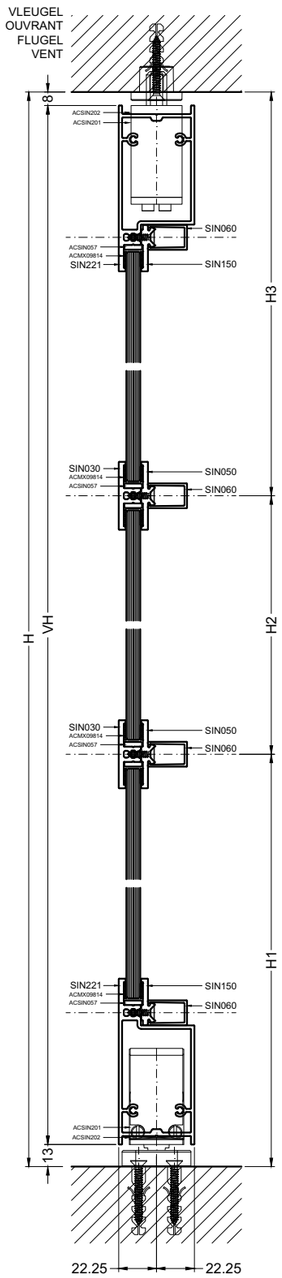


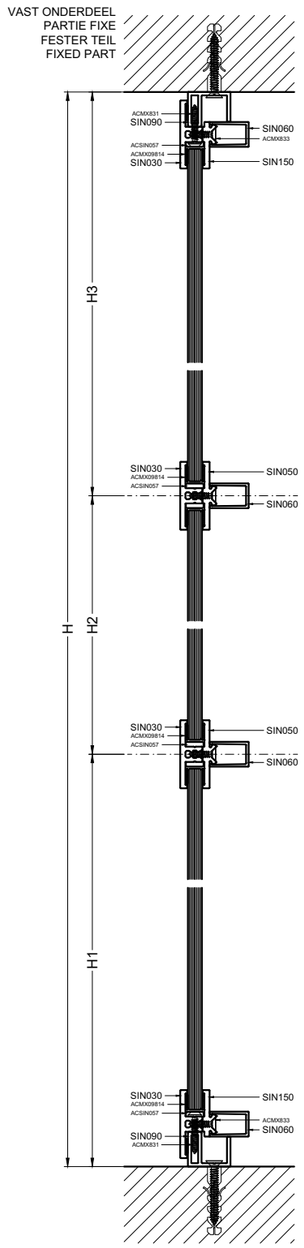


VAST ONDERDEEL
PARTIE FIXE
FESTER TEIL
FIXED PART

| | | | | |
|---|---|---|---|---|
| SIN090 | | 2 | | H |
| | | 2 | | B2+1 |
| SIN020 | | 1 | | H |
| SIN021 | | 1 | | H |
| SIN030 | | 1 | | H-10 |
| | | 4 | | B2-23 |
| SIN050 | | 2 | | B2+1 |
| SIN060 | | 2 | | B2+1 |
| SIN150 | | 1 | | H |
| | | 2 | | H1-65 |
| | | 2 | | H2-40 |
| | | 2 | | H3-65 |
| | | 2 | | B2+1 |
| SIN060 | | 1 | | H |
| | | 2 | | H1-39.6 |
| | | 2 | | H2-14.6 |
| | | 2 | | H3-39.6 |
| | | 2 | | B2+1 |

| | | |
|---|---|---|
| VB | VLEUGELBREEDTE<br>LARGEUR VANTAIL<br>BREITE FLUGEL<br>WIDTH SASH | B1-3 |
| VH | VLEUGELHOOGTE<br>HAUTEUR D'OUVRANT<br>FLUGEL HOHE<br>VENT HEIGHT | H-21 |

VLEUGEL
OUVRANT
FLUGEL
VENT

| | | | | |
|---|---|---|---|---|
| SIN020 | | 1 | | VH |
| SIN021 | | 1 | | VH |
| SIN221 | | 2 | | VB-10 |
| SIN030 | | 2 | | VB-34 |
| SIN050 | | 2 | | VB-10 |
| SIN060 | | 2 | | VB-10 |
| SIN150 | | 2 | | VB-10 |
| SIN060 | | 2 | | VB-10 |
| SIN150 | | 2 | | H1-130.5 |
| | | 2 | | H2-40 |
| | | 2 | | H3-125.5 |
| SIN060 | | 2 | | H1-105.1 |
| | | 2 | | H2-14.6 |
| | | 2 | | H3-100.1 |

| | |
|---|---|
| ACSIN057 | 38 |
| ACMX09814 | 6H+6B+2B2 |
| ACMX09814<br>OF / OU / COEUR / OR<br>ACMX09816 | 4H+6B |

< 100 kg

| | |
|---|---|
| ACSIN201 | 1 |
| ACSIN202 | 2 |

< 150 kg

| | |
|---|---|
| ACSIN204 | 1 |
| ACSIN205 | 1 |
| ACSIN202 | 1 |

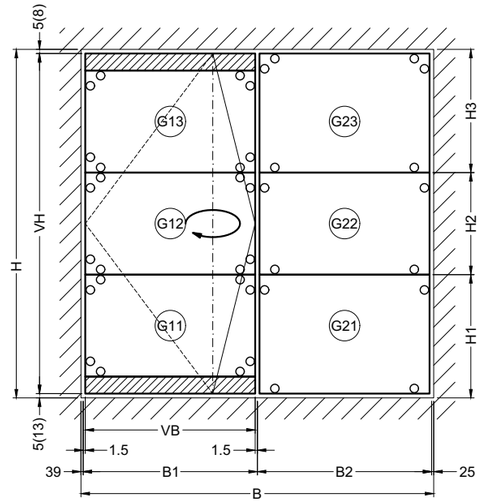


VAST ONDERDEEL
PARTIE FIXE
FESTER TEIL
FIXED PART

| | |
|---|---|
| G21 | H1-42<br>B2-31 |
| G22 | H2-17<br>B2-31 |
| G23 | H3-42<br>B2-31 |

VLEUGEL
OUVRANT
FLUGEL
VENT

| | |
|---|---|
| G11 | H1-107.5<br>VB-42 |
| G12 | H2-17<br>VB-42 |
| G13 | H3-102.5<br>VB-42 |

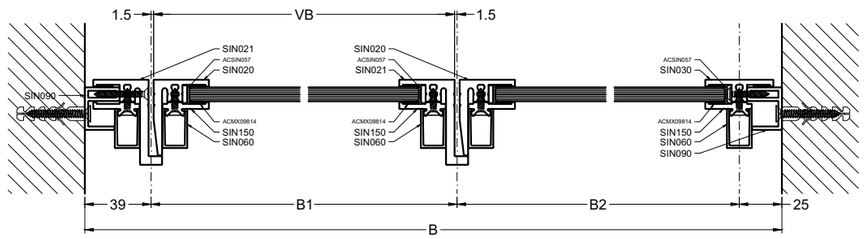


TAATSDEUR002C

# TAATSDEUR003A

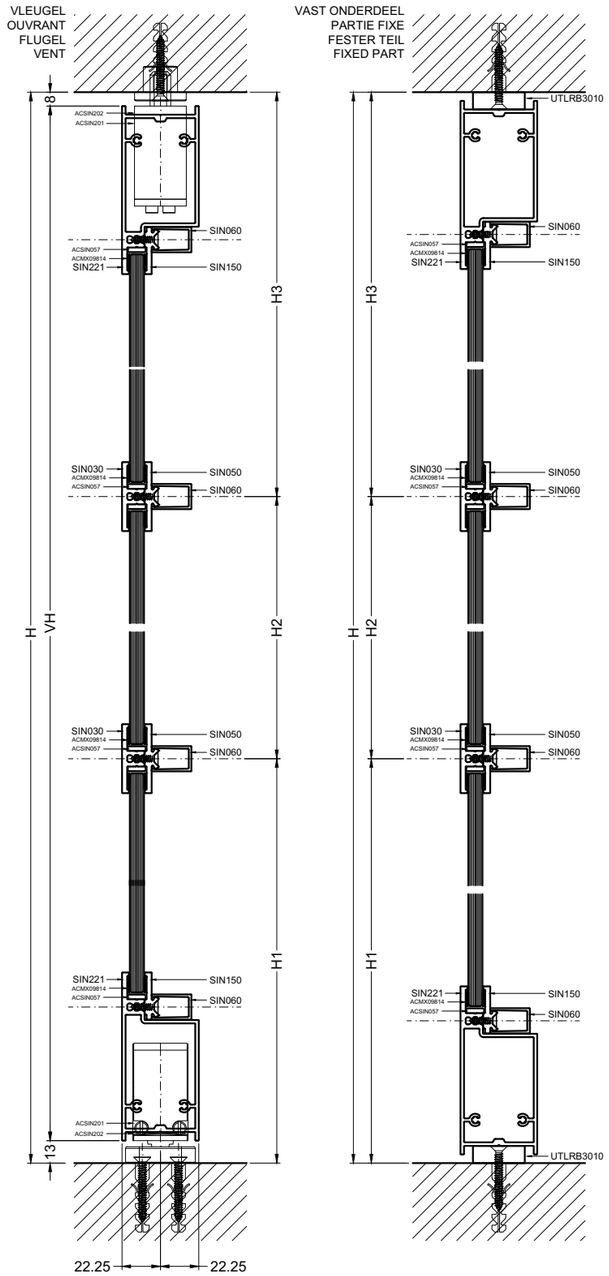


VAST ONDERDEEL
PARTIE FIXE
FESTER TEIL
FIXED PART

| | | | | |
|---|---|---|---|---|
| UTL090 | | 2 | | H |
| SIN021 | | 3 | | H |
| SIN020 | | 1 | | H |
| SIN221 | | 2 | | B1+1 |
| | | 2 | | B3+1 |
| UTLRB3010 | | 2 | | B1+1 |
| | | 2 | | B3+1 |
| SIN030 | | 2 | | B1-23 |
| | | 2 | | B3-23 |
| SIN050 | | 2 | | B1+1 |
| | | 2 | | B3+1 |
| SIN060 | | 2 | | B1+1 |
| | | 2 | | B3+1 |
| SIN150 | | 2 | | B1+1 |
| | | 2 | | B3+1 |
| | | 2 | | H1-122.5 |
| | | 2 | | H2-40 |
| | | 2 | | H3-122.5 |
| SIN060 | | 2 | | B1+1 |
| | | 2 | | B3+1 |
| | | 2 | | H1-97.1 |
| | | 2 | | H2-14.6 |
| | | 2 | | H3-97.1 |

| | | |
|---|---|---|
| VB | VLEUGELBREEDTE<br>LARGEUR VANTAIL<br>BREITE FLUGEL<br>WIDTH SASH | B2-3 |
| VH | VLEUGELHOOGTE<br>HAUTEUR D'OUVRANT<br>FLUGEL HOHE<br>VENT HEIGHT | H-21 |

VLEUGEL
OUVRANT
FLUGEL
VENT

| | | | | |
|---|---|---|---|---|
| SIN020 | | 1 | | VH |
| SIN021 | | 1 | | VH |
| SIN221 | | 2 | | VB-10 |
| SIN030 | | 2 | | VB-34 |
| SIN050 | | 2 | | VB-10 |
| SIN060 | | 2 | | VB-10 |
| SIN150 | | 2 | | VB-10 |
| SIN060 | | 2 | | VB-10 |
| SIN150 | | 2 | | H1-130.5 |
| | | 2 | | H2-40 |
| | | 2 | | H3-125.5 |
| SIN060 | | 2 | | H1-105.1 |
| | | 2 | | H2-14.6 |
| | | 2 | | H3-100.1 |

| | |
|---|---|
| ACSIN057 | 52 |
| ACMX09814 | 6H+6B |
| ACMX09814<br>OF / OU / OSB / OR<br>ACMX09816 | 6H+6B |

< 100 kg

| | |
|---|---|
| ACSIN201 | 1 |
| ACSIN202 | 2 |

< 150 kg

| | |
|---|---|
| ACSIN204 | 1 |
| ACSIN205 | 1 |
| ACSIN202 | 1 |

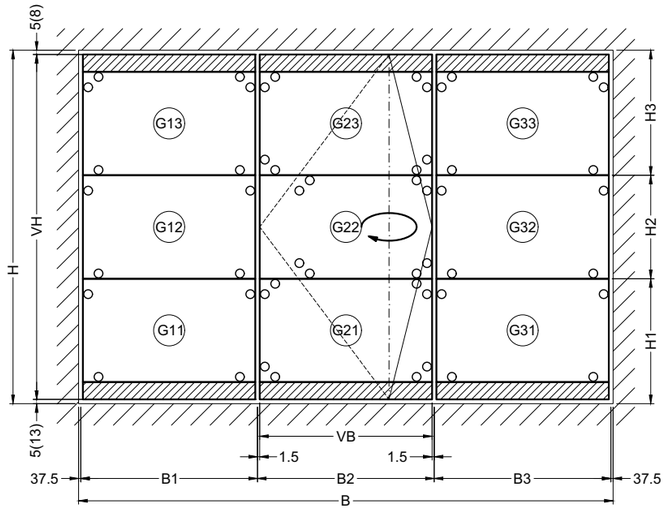


VAST ONDERDEEL
PARTIE FIXE
FESTER TEIL
FIXED PART

| | |
|---|---|
| G11 | H1-99.5<br>B1-31 |
| G12 | H2-17<br>B1-31 |
| G13 | H3-99.5<br>B1-31 |
| G31 | H1-99.5<br>B3-31 |
| G32 | H2-17<br>B3-31 |
| G33 | H3-99.5<br>B3-31 |

VLEUGEL
OUVRANT
FLUGEL
VENT

| | |
|---|---|
| G21 | H1-107.5<br>VB-42 |
| G22 | H2-17<br>VB-42 |
| G23 | H3-102.5<br>VB-42 |

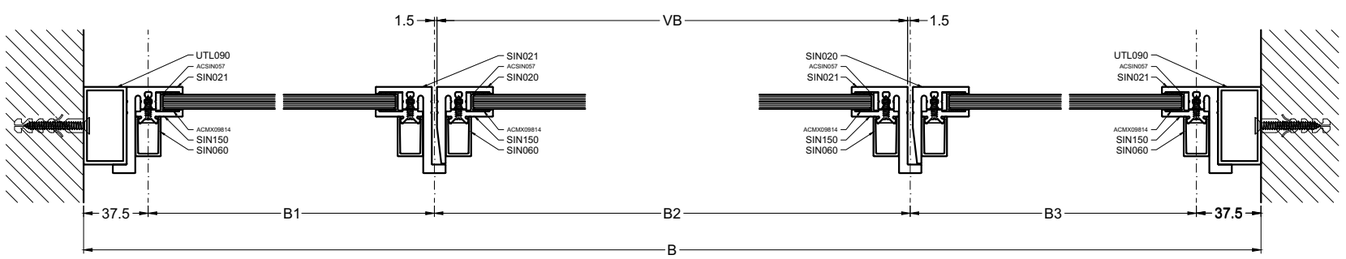


ZAAGTABELLEN-COUPES ET DEBITS-ZUSCHNITTSTABELLEN-FABRICATION CHARTS

TAATSDEUR003A

aliplast
member of
CORIALIS

# TAATSDEUR003A_SLOT

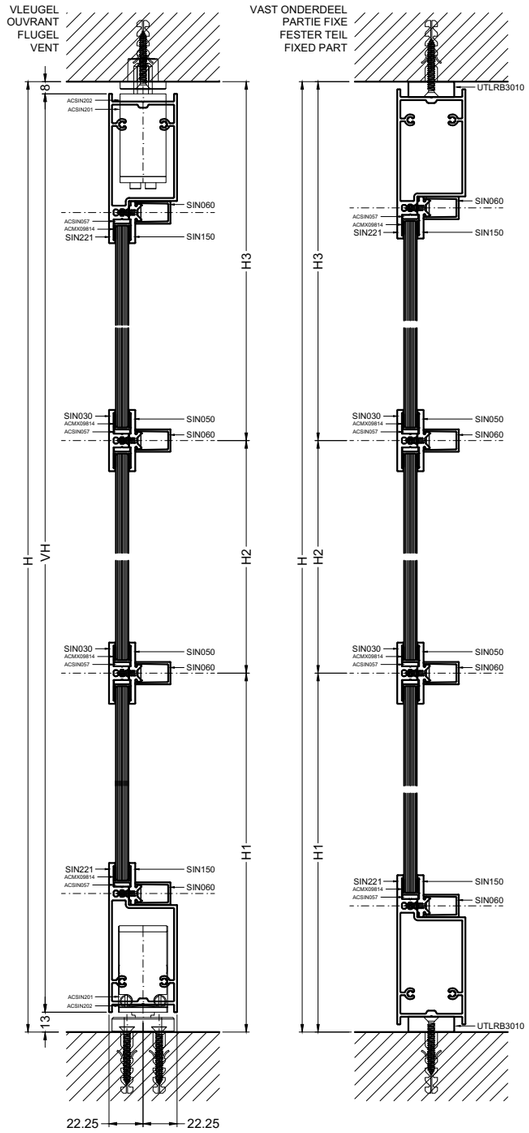


VAST ONDERDEEL
PARTIE FIXE
FESTER TEIL
FIXED PART

| | | | | |
|---|---|---|---|---|
| UTL090 | | 2 | | H |
| SIN021 | | 3 | | H |
| SIN020 | | 1 | | H |
| SIN221 | | 2 | | B1+1 |
| | | 2 | | B3+1 |
| UTLRB3010 | | 2 | | B1+1 |
| | | 2 | | B3+1 |
| SIN030 | | 2 | | B1-23 |
| | | 2 | | B3-23 |
| SIN050 | | 2 | | B1+1 |
| | | 2 | | B3+1 |
| SIN060 | | 2 | | B1+1 |
| | | 2 | | B3+1 |
| SIN150 | | 2 | | B1+1 |
| | | 2 | | B3+1 |
| | | 2 | | H1-122.5 |
| | | 2 | | H2-40 |
| | | 2 | | H3-122.5 |
| SIN060 | | 2 | | B1+1 |
| | | 2 | | B3+1 |
| | | 2 | | H1-97.1 |
| | | 2 | | H2-14.6 |
| | | 2 | | H3-97.1 |

| | | |
|---|---|---|
| VB | VLEUGELBREEDTE<br>LARGEUR VANTAIL<br>BREITE FLUGEL<br>WIDTH SASH | B2-3 |
| VH | VLEUGELHOOGTE<br>HAUTEUR D'OUVRANT<br>FLUGEL HOHE<br>VENT HEIGHT | H-21 |

VLEUGEL
OUVRANT
FLUGEL
VENT

| | | | | |
|---|---|---|---|---|
| SIN020 | | 1 | | VH |
| SIN021 | | 1 | | VH |
| SIN221 | | 2 | | VB-10 |
| SIN030 | | 2 | | VB-34 |
| SIN050 | | 2 | | VB-10 |
| SIN060 | | 2 | | VB-10 |
| SIN150 | | 2 | | VB-10 |
| SIN060 | | 2 | | VB-10 |
| SIN121 | | 1 | | H2-15 |
| SIN150 | | 2 | | H1-130.5 |
| | | 2 | | H2-40 |
| | | 2 | | H3-125.5 |
| SIN060 | | 2 | | H1-105.1 |
| | | 2 | | H2-14.6 |
| | | 2 | | H3-100.1 |

| | |
|---|---|
| ACSIN057 | 54 |
| ACMX09814 | 6H+1H2+6B |
| ACMX09814<br>OF / OU / 0000 / 05<br>ACMX09816 | 6H+6B |

< 100 kg

| | |
|---|---|
| ACSIN201 | 1 |
| ACSIN202 | 2 |

< 150 kg

| | |
|---|---|
| ACSIN204 | 1 |
| ACSIN205 | 1 |
| ACSIN202 | 1 |

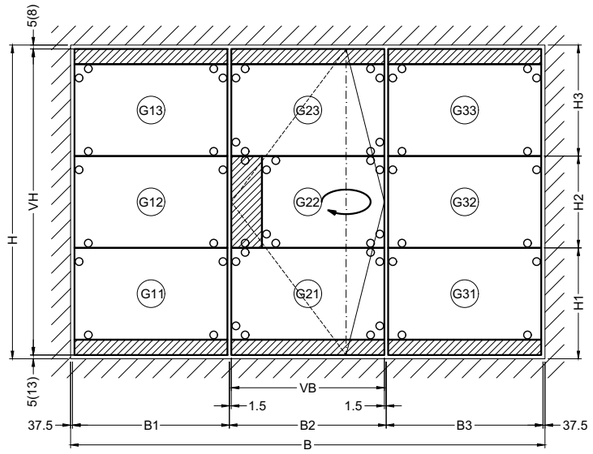


VAST ONDERDEEL
PARTIE FIXE
FESTER TEIL
FIXED PART

| | |
|---|---|
| G11 | H1-99.5<br>B1-31 |
| G12 | H2-17<br>B1-31 |
| G13 | H3-99.5<br>B1-31 |
| G31 | H1-99.5<br>B3-31 |
| G32 | H2-17<br>B3-31 |
| G33 | H3-99.5<br>B3-31 |

VLEUGEL
OUVRANT
FLUGEL
VENT

| | |
|---|---|
| G21 | H1-107.5<br>VB-42 |
| G22 | H2-17<br>VB-138 |
| G23 | H3-102.5<br>VB-42 |

OVERZICHT SLOTEN, ZIE WERKTEKENINGEN
APERCU SERRURES, VOIR LES DESSINS DE CONSTOUCTION
UEBERSICHT SCHLOESSER, SIEHE KONSTRUKTIONZEICHNUNGEN
OVERVIEW LOCKS, SEE CONSTRUCTION DRAWINGS

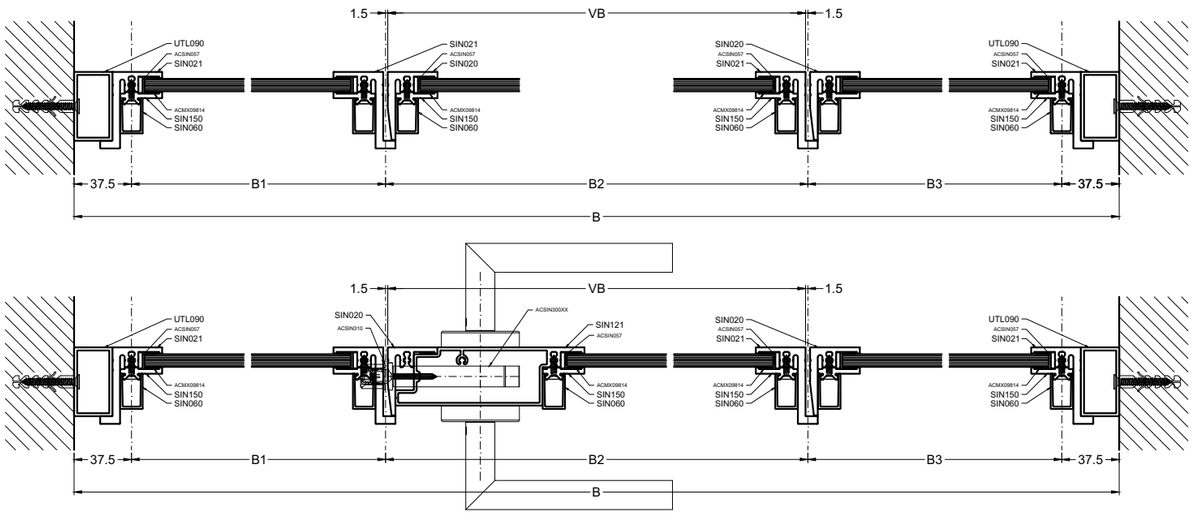

# TAATSDEUR003B

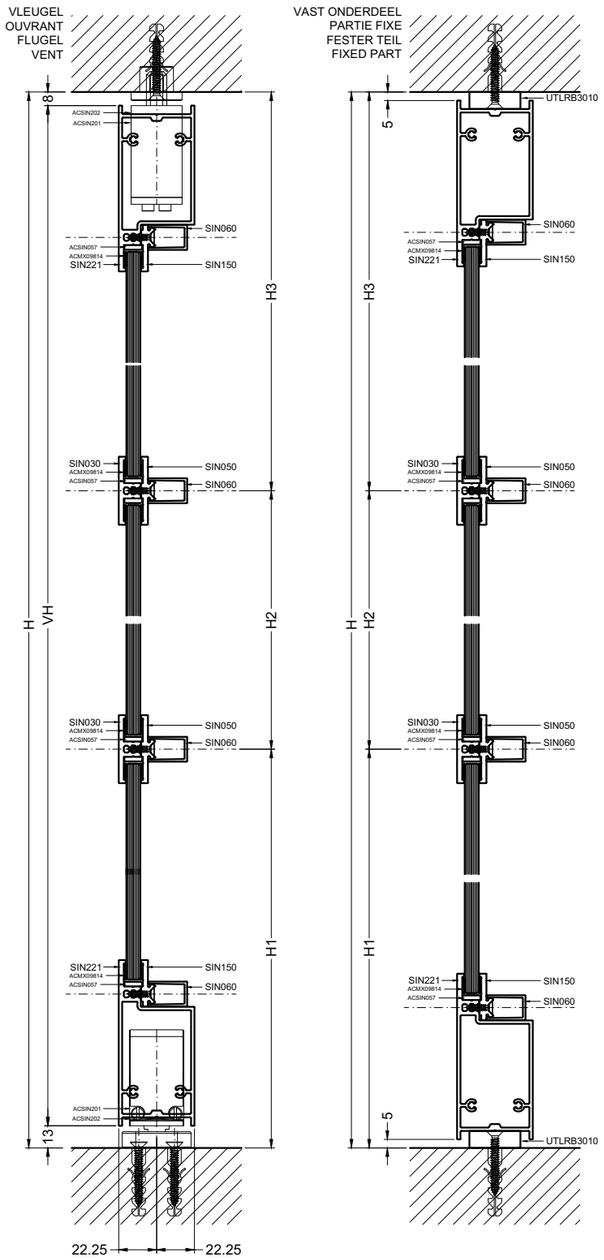


VAST ONDERDEEL
PARTIE FIXE
FESTER TEIL
FIXED PART

| | | | | |
|---|---|---|---|---|
| UTL090 | | 2 | | H |
| SIN021 | | 2 | | H |
| SIN020 | | 2 | | H |
| SIN221 | | 2 | | B1 |
| | | 2 | | B3 |
| UTLRB3010 | | 2 | | B1 |
| | | 2 | | B3 |
| SIN030 | | 2 | | B1-24 |
| | | 2 | | B3-24 |
| SIN050 | | 2 | | B1 |
| | | 2 | | B3 |
| SIN060 | | 2 | | B1 |
| | | 2 | | B3 |
| SIN150 | | 2 | | B1 |
| | | 2 | | B3 |
| | | 2 | | H1-122.5 |
| | | 2 | | H2-40 |
| | | 2 | | H3-122.5 |
| SIN060 | | 2 | | B1 |
| | | 2 | | B3 |
| | | 2 | | H1-97.1 |
| | | 2 | | H2-14.6 |
| | | 2 | | H3-97.1 |

| | | |
|---|---|---|
| VB | VLEUGELBREEDTE<br>LARGEUR VANTAIL<br>BREITE FLUGEL<br>WIDTH SASH | B2-5 |
| VH | VLEUGELHOOGTE<br>HAUTEUR D'OUVRANT<br>FLUGEL HOHE<br>VENT HEIGHT | H-21 |

VLEUGEL
OUVRANT
FLUGEL
VENT

| | | | | |
|---|---|---|---|---|
| SIN020 | | 2 | | VH |
| SIN221 | | 2 | | VB-10 |
| SIN030 | | 2 | | VB-34 |
| SIN050 | | 2 | | VB-10 |
| SIN060 | | 2 | | VB-10 |
| SIN150 | | 2 | | VB-10 |
| SIN060 | | 2 | | VB-10 |
| SIN150 | | 2 | | H1-130.5 |
| | | 2 | | H2-40 |
| | | 2 | | H3-125.5 |
| SIN060 | | 2 | | H1-105.1 |
| | | 2 | | H2-14.6 |
| | | 2 | | H3-100.1 |

| | |
|---|---|
| ACSIN057 | 52 |
| ACMX09814 | 6H+6B |
| ACMX09814<br>OF / OU / ODER / OR<br>ACMX09816 | 6H+6B |

< 100 kg

| | |
|---|---|
| ACSIN201 | 1 |
| ACSIN202 | 2 |

< 150 kg

| | |
|---|---|
| ACSIN204 | 1 |
| ACSIN205 | 1 |
| ACSIN202 | 1 |

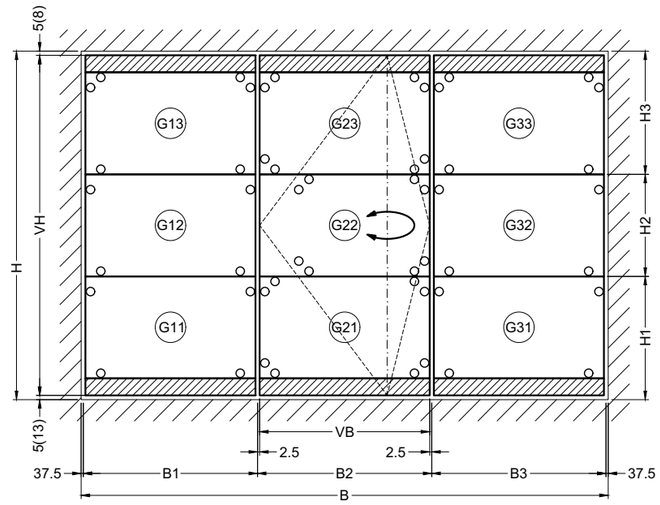


VAST ONDERDEEL
PARTIE FIXE
FESTER TEIL
FIXED PART

| | |
|---|---|
| G11 | H1-99.5<br>B1-32 |
| G12 | H2-17<br>B1-32 |
| G13 | H3-99.5<br>B1-32 |
| G31 | H1-99.5<br>B3-32 |
| G32 | H2-17<br>B3-32 |
| G33 | H3-99.5<br>B3-32 |

VLEUGEL
OUVRANT
FLUGEL
VENT

| | |
|---|---|
| G21 | H1-107.5<br>VB-42 |
| G22 | H2-17<br>VB-42 |
| G23 | H3-102.5<br>VB-42 |

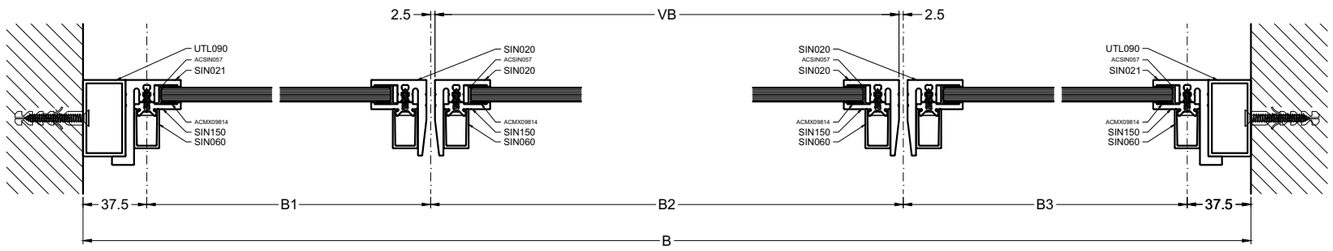


TAATSDEUR003B

# TAATSDEUR003B2

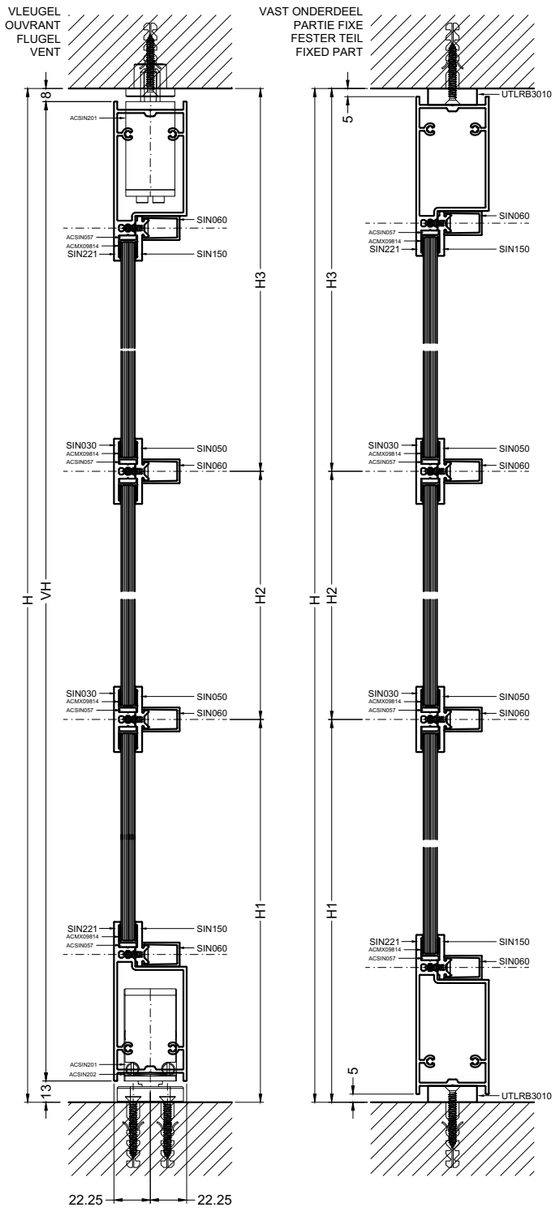


VAST ONDERDEEL
PARTIE FIXE
FESTER TEIL
FIXED PART

| | | | | |
|---|---|---|---|---|
| UTL090 | | 2 | | H |
| SIN021 | | 2 | | H |
| SIN020 | | 2 | | H |
| SIN221 | | 2 | | B1 |
| | | 2 | | B4 |
| UTLRB3010 | | 2 | | B1 |
| | | 2 | | B4 |
| SIN030 | | 2 | | B1-24 |
| | | 2 | | B4-24 |
| SIN050 | | 2 | | B1 |
| | | 2 | | B4 |
| SIN060 | | 2 | | B1 |
| | | 2 | | B4 |
| SIN150 | | 2 | | B1 |
| | | 2 | | B4 |
| | | 2 | | H1-122.5 |
| | | 2 | | H2-40 |
| | | 2 | | H3-122.5 |
| SIN060 | | 2 | | B1 |
| | | 2 | | B4 |
| | | 2 | | H1-97.1 |
| | | 2 | | H2-14.6 |
| | | 2 | | H3-97.1 |

| | | |
|---|---|---|
| VB2<br>VB3 | VLEUGELBREEDTE<br>LARGEUR VANTAIL<br>BREITE FLUGEL<br>WIDTH SASH | B2-5<br>B3-5 |
| VH | VLEUGELHOOGTE<br>HAUTEUR D'OUVRANT<br>FLUGEL HOHE<br>VENT HEIGHT | H-21 |

VLEUGEL
OUVRANT
FLUGEL
VENT

| | | | | |
|---|---|---|---|---|
| SIN020 | | 2 | | VH |
| SIN221 | | 2 | | VB2-10 |
| SIN030 | | 2 | | VB2-34 |
| SIN050 | | 2 | | VB2-10 |
| SIN060 | | 2 | | VB2-10 |
| SIN150 | | 2 | | VB2-10 |
| SIN060 | | 2 | | VB2-10 |

| | | | | |
|---|---|---|---|---|
| SIN020 | | 2 | | VH |
| SIN221 | | 2 | | VB3-10 |
| SIN030 | | 2 | | VB3-34 |
| SIN050 | | 2 | | VB3-10 |
| SIN060 | | 2 | | VB3-10 |
| SIN150 | | 2 | | VB3-10 |
| SIN060 | | 2 | | VB3-10 |
| SIN150 | | 4 | | H1-130.5 |
| | | 4 | | H2-40 |
| | | 4 | | H3-125.5 |
| SIN060 | | 4 | | H1-105.1 |
| | | 4 | | H2-14.6 |
| | | 4 | | H3-100.1 |

| | |
|---|---|
| O ACSIN057 | 76 |
| ACMX09814 | 8H+6B |
| ACMX09814<br>OR / OU / ODER / OR<br>ACMX09816 | 8H+6B |

< 100 kg

| | |
|---|---|
| ACSIN201 | 2 |
| ACSIN202 | 4 |

< 150 kg

| | |
|---|---|
| ACSIN204 | 2 |
| ACSIN205 | 2 |
| ACSIN202 | 2 |

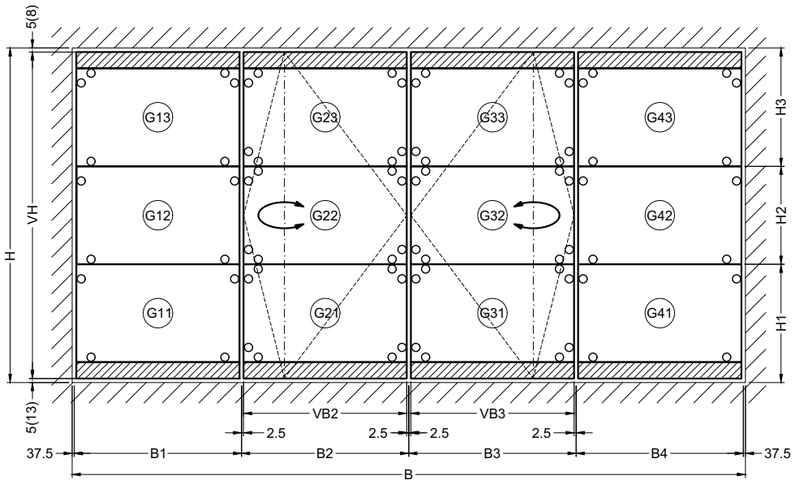


VAST ONDERDEEL
PARTIE FIXE
FESTER TEIL
FIXED PART

| | |
|---|---|
| G11 | H1-99.5<br>B1-32 |
| G12 | H2-17<br>B1-32 |
| G13 | H3-99.5<br>B1-32 |
| G41 | H1-99.5<br>B3-32 |
| G42 | H2-17<br>B3-32 |
| G43 | H3-99.5<br>B3-32 |

VLEUGEL
OUVRANT
FLUGEL
VENT

| | |
|---|---|
| G21 | H1-107.5<br>VB2-42 |
| G22 | H2-17<br>VB2-42 |
| G23 | H3-102.5<br>VB2-42 |
| G31 | H1-107.5<br>VB3-42 |
| G32 | H2-17<br>VB3-42 |
| G33 | H3-102.5<br>VB3-42 |

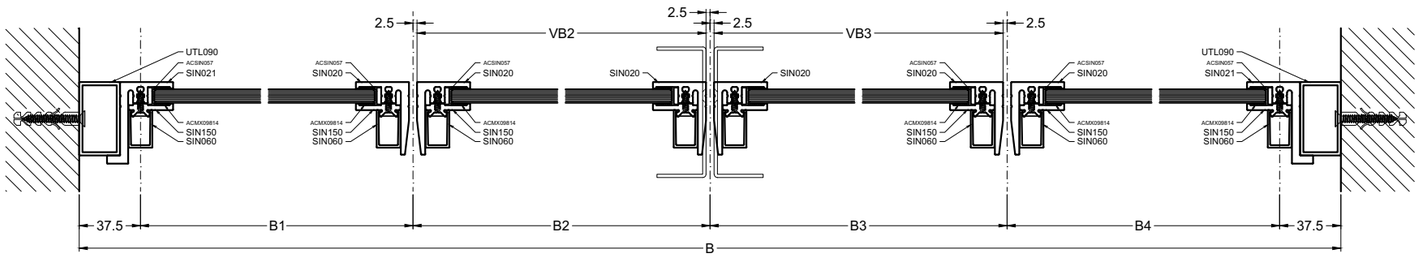


TAATSDEUR003B2

# TAATSDEUR003C

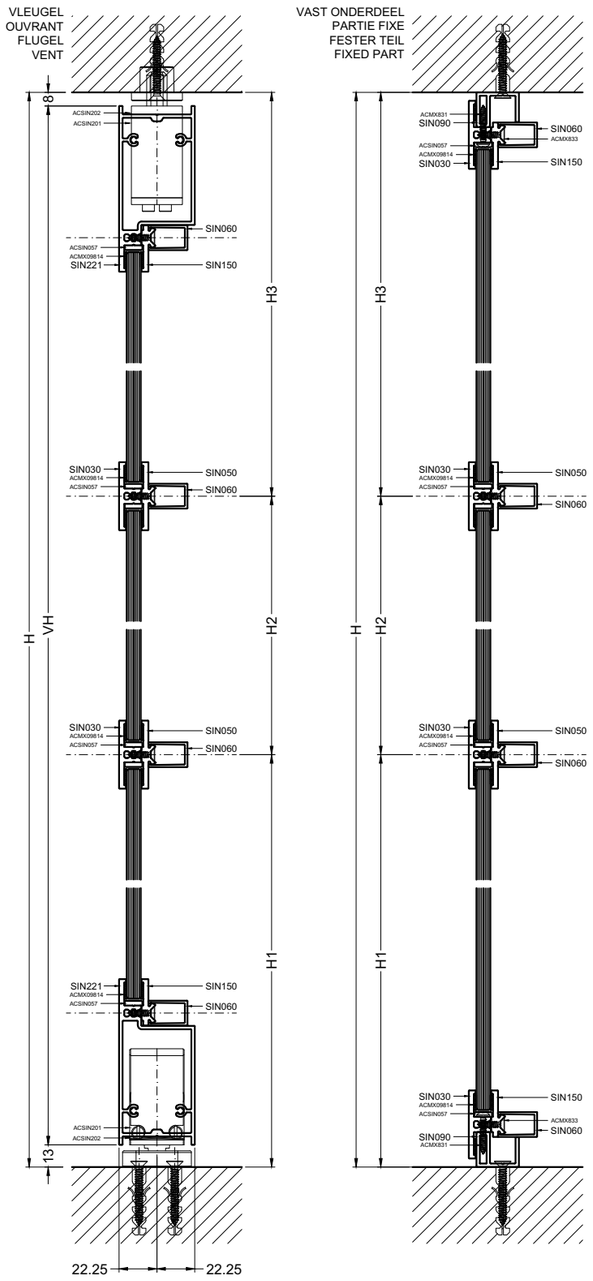


VAST ONDERDEEL
PARTIE FIXE
FESTER TEIL
FIXED PART

| | | | | |
|---|---|---|---|---|
| SIN090 | | 2 | | H |
| | | 2 | | B1+1 |
| | | 2 | | B3+1 |
| SIN020 | | 1 | | H |
| SIN021 | | 1 | | H |
| SIN030 | | 2 | | H-10 |
| | | 4 | | B1-23 |
| | | 4 | | B3-23 |
| SIN050 | | 2 | | B1+1 |
| | | 2 | | B3+1 |
| SIN060 | | 2 | | B1+1 |
| | | 2 | | B3+1 |
| SIN150 | | 4 | | H1-65 |
| | | 4 | | H2-40 |
| | | 4 | | H3-65 |
| | | 2 | | B1+1 |
| | | 2 | | B3+1 |
| SIN060 | | 4 | | H1-39.6 |
| | | 4 | | H2-14.6 |
| | | 4 | | H3-39.6 |
| | | 2 | | B1+1 |
| | | 2 | | B3+1 |

| | | |
|---|---|---|
| VB | VLEUGELBREEDTE<br>LARGEUR VANTAIL<br>BREITE FLUGEL<br>WIDTH SASH | B2-3 |
| VH | VLEUGELHOOGTE<br>HAUTEUR D'OUVRANT<br>FLUGEL HOHE<br>VENT HEIGHT | H-21 |

VLEUGEL
OUVRANT
FLUGEL
VENT

| | | | | |
|---|---|---|---|---|
| SIN020 | | 1 | | VH |
| SIN021 | | 1 | | VH |
| SIN221 | | 2 | | VB-10 |
| SIN030 | | 2 | | VB-34 |
| SIN050 | | 2 | | VB-10 |
| SIN060 | | 2 | | VB-10 |
| SIN150 | | 2 | | VB-10 |
| SIN060 | | 2 | | VB-10 |
| SIN150 | | 2 | | H1-130.5 |
| | | 2 | | H2-40 |
| | | 2 | | H3-125.5 |
| SIN060 | | 2 | | H1-105.1 |
| | | 2 | | H2-14.6 |
| | | 2 | | H3-100.1 |

| | |
|---|---|
| ACSIN057 | 52 |
| ACMX09814 | 8H+6B+2B2 |
| ACMX09814<br>OF / OU / ODER / OR<br>ACMX09816 | 6H+6B |

< 100 kg

| | |
|---|---|
| ACSIN201 | 1 |
| ACSIN202 | 2 |

< 150 kg

| | |
|---|---|
| ACSIN204 | 1 |
| ACSIN205 | 1 |
| ACSIN202 | 1 |

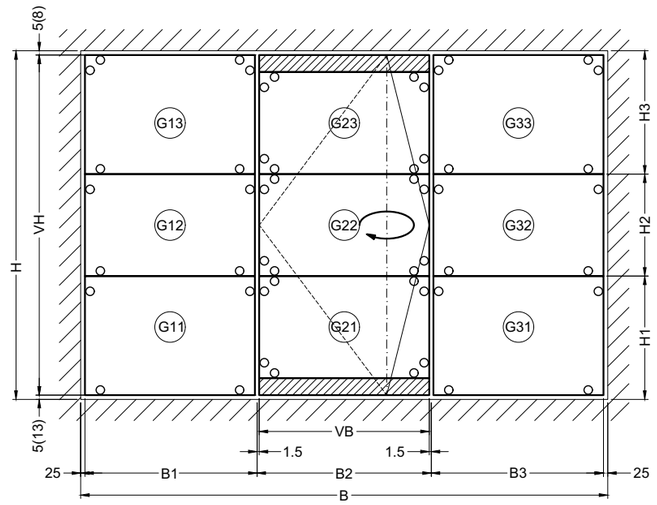


VAST ONDERDEEL
PARTIE FIXE
FESTER TEIL
FIXED PART

| | |
|---|---|
| G11 | H1-42<br>B1-31 |
| G12 | H2-17<br>B1-31 |
| G13 | H3-42<br>B1-31 |
| G31 | H1-42<br>B3-31 |
| G32 | H2-17<br>B3-31 |
| G33 | H3-42<br>B3-31 |

VLEUGEL
OUVRANT
FLUGEL
VENT

| | |
|---|---|
| G21 | H1-107.5<br>VB-42 |
| G22 | H2-17<br>VB-42 |
| G23 | H3-102.5<br>VB-42 |

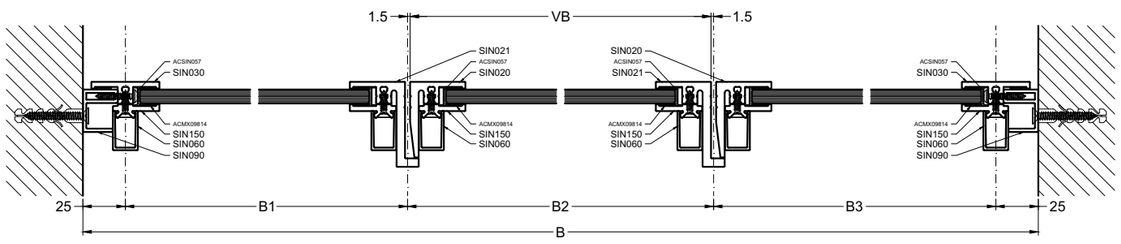


TAATSDEUR003C

# SCHARNIER001A_SLOT(400)

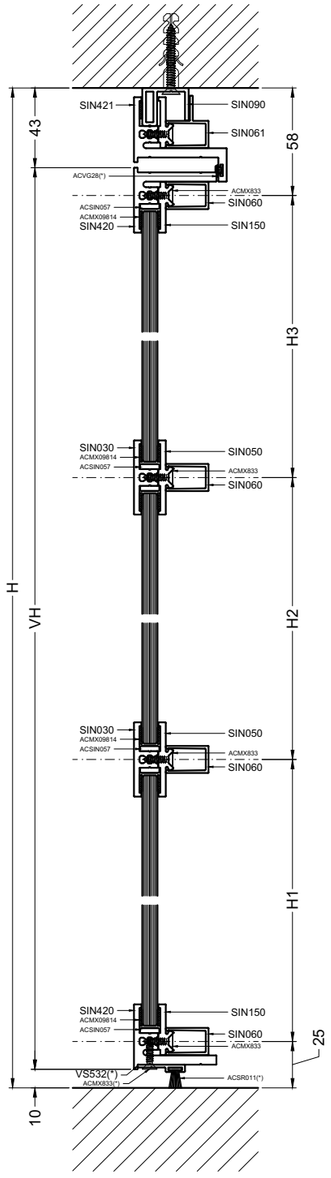


BUITENKADER
DORMANT
BLENDRAHMEN
OUTER FRAME

| | | | | |
|---|---|---|---|---|
| SIN090 | | 2 | | H |
| | | 1 | | B-35 |
| SIN421 | | 2 | | H-5 |
| | | 1 | | B-75 |
| SIN150 | | 2 | | H-19.5 |
| | | 1 | | B-65 |
| SIN061 | | 1 | | H-4.2 |
| | | 1 | | H-4.2 |
| | | 1 | | B-8.4 |

| | |
|---|---|
| ACSIN057 | 28 |
| ACSIN401R(L) OF / OU / ODER / OR ACSIN402R(L) | 4 |
| ACMX09814 | 4H+H2+7B |
| ACMX09814 OF / OU / ODER / OR ACMX09816 | 2H+6B |
| ACSR011 (*) | VB |
| ACVG28 (*) | 2H+B |

VLEUGEL
OUVRANT
FLUGEL
VENT

| | | | | |
|---|---|---|---|---|
| SIN420 | | 2 | | VH |
| | | 2 | | VB-15 |
| SIN030 | | 2 | | VB-39 |
| SIN050 | | 2 | | VB-15 |
| SIN060 | | 2 | | VB-15 |
| SIN150 | | 2 | | VB-15 |
| | | 2 | | H1-40 |
| | | 2 | | H2-40 |
| | | 2 | | H3-40 |
| SIN060 | | 2 | | VB-15 |
| | | 2 | | H1-14.6 |
| | | 2 | | H2-14.6 |
| | | 2 | | H3-14.6 |
| SIN121 | | 1 | | H2-15 |
| VS532 (*) | | 1 | | VB-5 |

| | | |
|---|---|---|
| VB | VLEUGELBREEDTE<br>LARGEUR VANTAIL<br>BREITE FLUGEL<br>WIDTH SASH | B-86 |
| VH | VLEUGELHOOGTE<br>HAUTEUR D'OUVRANT<br>FLUGEL HOHE<br>VENT HEIGHT | H-53 |

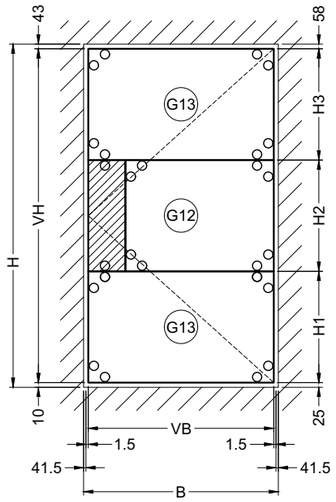


VLEUGEL
OUVRANT
FLUGEL
VENT

| | |
|---|---|
| G11 | H1-17<br>VB-47 |
| G12 | H2-17<br>VB-143 |
| G13 | H3-17<br>VB-47 |

OVERZICHT SLOTEN, ZIE WERKTEKENINGEN
APERCU SERRURES, VOIR LES DESSINS DE CONSTOUCTION
UEBERSICHT SCHLOESSER, SIEHE KONSTRUKTIONZEICHNUNGEN
OVERVIEW LOCKS, SEE CONSTRUCTION DRAWINGS

| | |
|---|---|
| (*) | OPTIONEEL<br>EN OPTION<br>FAKULTATIV<br>OPTIONAL |

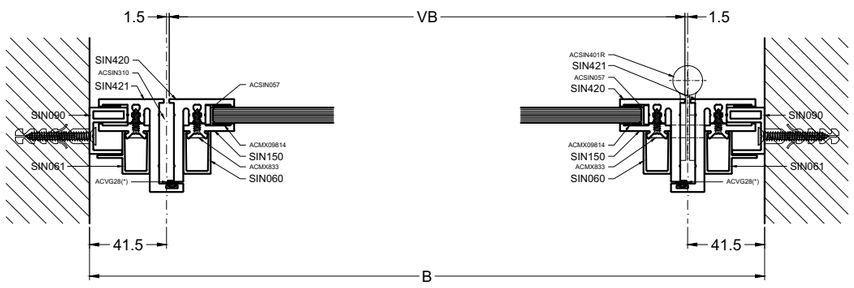


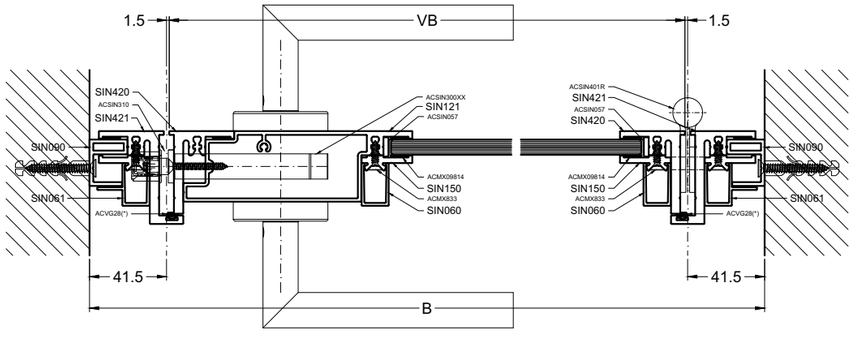

# SCHARNIER001A2_SLOT(400)

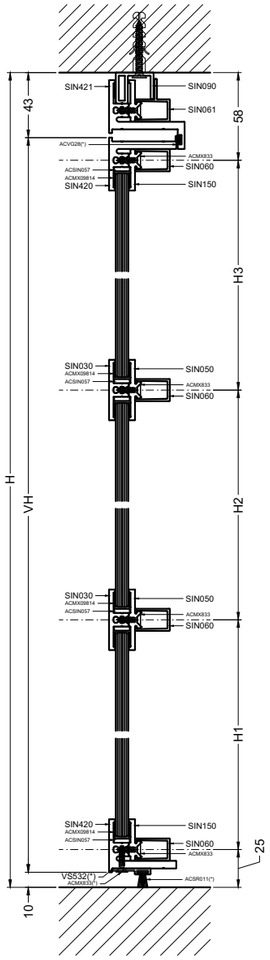


BUITENKADER
DORMANT
BLENDRAHMEN
OUTER FRAME

| | | | | |
|---|---|---|---|---|
| SIN090 | | 2 | | H |
| | | 1 | | B-35 |
| SIN421 | | 2 | | H-5 |
| | | 1 | | B-75 |
| SIN150 | | 2 | | H-19.5 |
| | | 1 | | B-65 |
| SIN061 | | 1 | | H-4.2 |
| | | 1 | | H-4.2 |
| | | 1 | | B-8.4 |

| | |
|---|---|
| ACSIN057 | 56 |
| ACSIN401R<br>or ACSIN300R-06<br>ACSIN402R | 4 |
| ACSIN401L<br>or ACSIN300L-06<br>ACSIN402L | 4 |
| ACMX09814 | 6H+2H2+7B |
| ACMX09814<br>or ACSIN300B-06<br>ACMX09816 | 4H+6B |
| ACSR011 (*) | VB1+VB2 |
| ACVG28 (*) | 3H+B |
| ACSIN330 | 2 |
| ACSIN331 | 1 |
| ACSIN340 | 2 |

PRIMAIRE VLEUGEL
PREMIERE VANTAIL
GANGFLEUGEL
FIRST VENT

| | | | | |
|---|---|---|---|---|
| SIN420 | | 2 | | VH |
| | | 2 | | VB(prim)-15 |
| SIN030 | | 2 | | VB(prim)-39 |
| SIN050 | | 2 | | VB(prim)-15 |
| SIN060 | | 2 | | VB(prim)-15 |
| SIN150 | | 2 | | VB(prim)-15 |
| | | 2 | | H1-40 |
| | | 2 | | H2-40 |
| | | 2 | | H3-40 |
| SIN060 | | 2 | | VB(prim)-15 |
| | | 2 | | H1-14.6 |
| | | 2 | | H2-14.6 |
| | | 2 | | H3-14.6 |
| SIN121 | | 1 | | H2-15 |
| VS532 (*) | | 1 | | VB(prim)-5 |

SECUNDAIRE VLEUGEL
DEUXIEME VANTAIL
STANDFLEUGEL
SECOND VENT

| | | | | |
|---|---|---|---|---|
| SIN420 | | 1 | | VH |
| | | 2 | | VB(sec)-15 |
| SIN421 | | 1 | | VH |
| SIN030 | | 2 | | VB(sec)-39 |
| SIN050 | | 2 | | VB(sec)-15 |
| SIN060 | | 2 | | VB(sec)-15 |
| SIN150 | | 2 | | VB(sec)-42.5 |
| | | 1 | | H1-40 |
| | | 1 | | H1-12.5 |
| | | 2 | | H2-40 |
| | | 1 | | H3-40 |
| | | 1 | | H3-12.5 |
| SIN060 | | 2 | | VB(sec)-29.8 |
| | | 1 | | H1-14.6 |
| | | 1 | | H1-139.8 |
| | | 2 | | H2-14.6 |
| | | 1 | | H3-14.6 |
| | | 1 | | H3-139.8 |
| SIN121 | | 1 | | H2-15 |
| VS532 (*) | | 1 | | VB(sec)-5 |

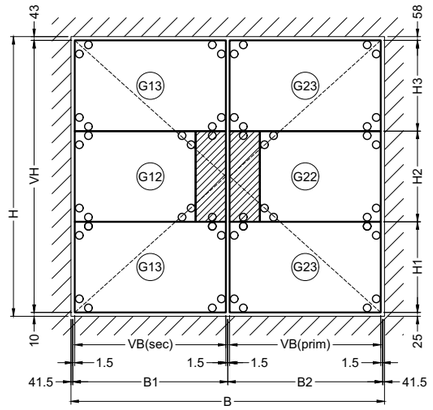


PRIMAIRE VLEUGEL
PREMIERE VANTAIL
GANGFLEUGEL
FIRST VENT

| | |
|---|---|
| G21 | H1-17<br>VB(prim)-47 |
| G22 | H2-17<br>VB(prim)-143 |
| G23 | H3-17<br>VB(prim)-47 |

SECUNDAIRE VLEUGEL
DEUXIEME VANTAIL
STANDFLEUGEL
SECOND VENT

| | |
|---|---|
| G11 | H1-17<br>VB(sec)-47 |
| G12 | H2-17<br>VB(sec)-143 |
| G13 | H3-17<br>VB(sec)-47 |

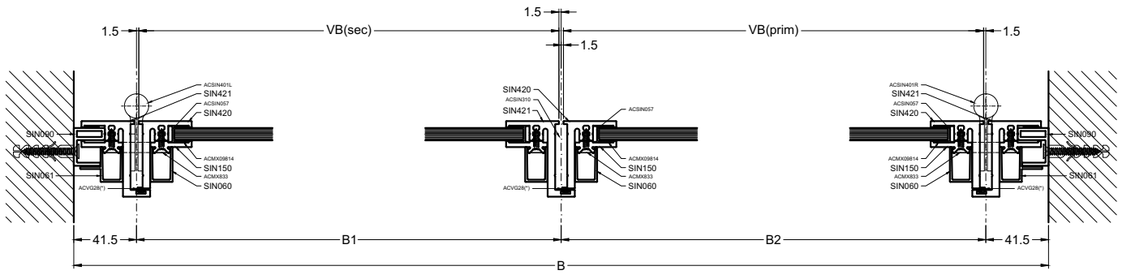


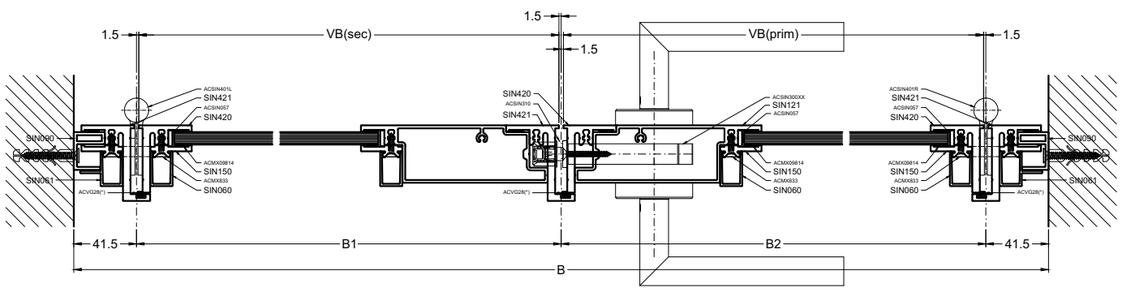


| | | |
|---|---|---|
| VB1<br>VB2 | VLEUGELBREEDTE<br>LARGEUR VANTAIL<br>BREITE FLUGEL<br>WIDTH SASH | B1-3<br>B2-3 |
| VH | VLEUGELHOOGTE<br>HAUTEUR D'OUVRANT<br>FLUGEL HOHE<br>VENT HEIGHT | H-53 |

| | |
|---|---|
| (*) | OPTIONEEL<br>EN OPTION<br>FAKULTATIV<br>OPTIONAL |

ZAAGTABELLEN-COUPES ET DEBITS-ZUSCHNITTSTABELLEN-FABRICATION CHARTS

# SCHARNIER001A3_SLOT (400)

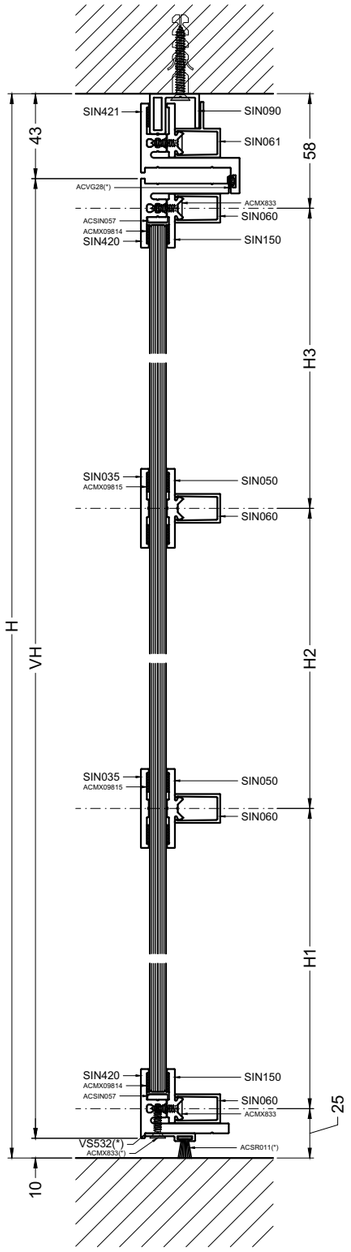


BUITENKADER
DORMANT
BLENDRAHMEN
OUTER FRAME

| | | | | |
|---|---|---|---|---|
| SIN090 | | 2 | | H |
| | | 1 | | B-35 |
| SIN421 | | 2 | | H-5 |
| | | 1 | | B-75 |
| SIN150 | | 2 | | H-19.5 |
| | | 1 | | B-65 |
| SIN061 | | 1 | | H-4.2 |
| | | 1 | | H-4.2 |
| | | 1 | | B-8.4 |

| | |
|---|---|
| ACSIN057 | 8 |
| ACSIN401R(L) OF / OU / ODER / OR ACSIN402R(L) | 4 |
| ACMX09814 | 5H+3B |
| ACMX09814 OF / OU / ODER / OR ACMX09816 | 2H+2B |
| ACMX09815 | 8B |
| ACSR011 (*) | VB |
| ACVG28 (*) | 2H+B |

VLEUGEL
OUVRANT
FLUGEL
VENT

| | | | | |
|---|---|---|---|---|
| SIN420 | | 2 | | VH |
| | | 2 | | VB-15 |
| SIN121 | | 1 | | VH-15 |
| SIN035 | | 2 | | VB-166 |
| SIN050 | | 2 | | VB-166 |
| SIN060 | | 2 | | VB-140.6 |
| SIN150 | | 2 | | VH-15 |
| | | 2 | | VB-166 |
| SIN060 | | 2 | | VH-15 |
| | | 2 | | VB-140.6 |
| VS532 (*) | | 1 | | VB-5 |

| | | |
|---|---|---|
| VB | VLEUGELBREEDTE<br>LARGEUR VANTAIL<br>BREITE FLUGEL<br>WIDTH SASH | B-86 |
| VH | VLEUGELHOOGTE<br>HAUTEUR D'OUVRANT<br>FLUGEL HOHE<br>VENT HEIGHT | H-53 |

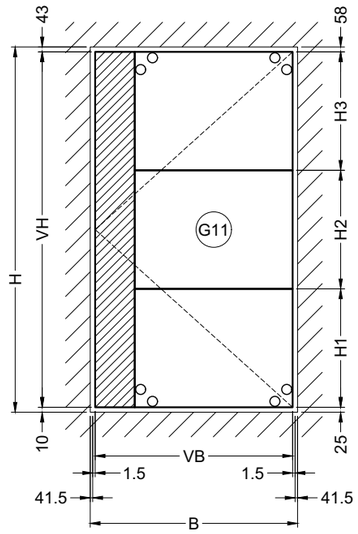


VLEUGEL
OUVRANT
FLUGEL
VENT

| | |
|---|---|
| G11 | VH-47<br>VB-143 |

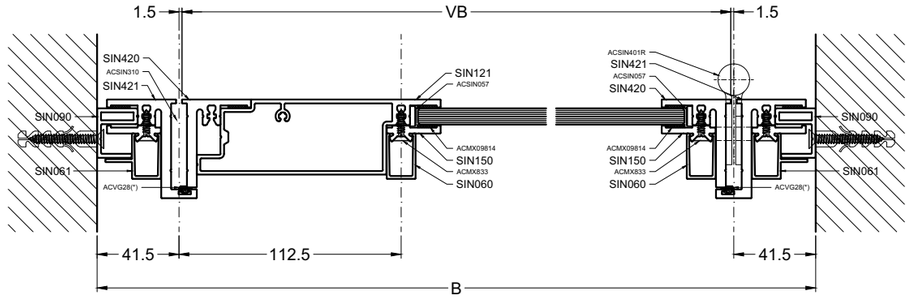


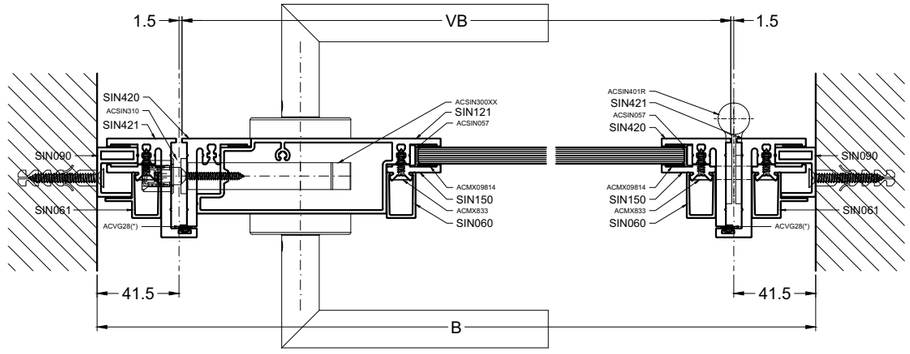


SCHARNIER001A3_SLOT (400)

# SCHARNIER001B_SLOT(400)

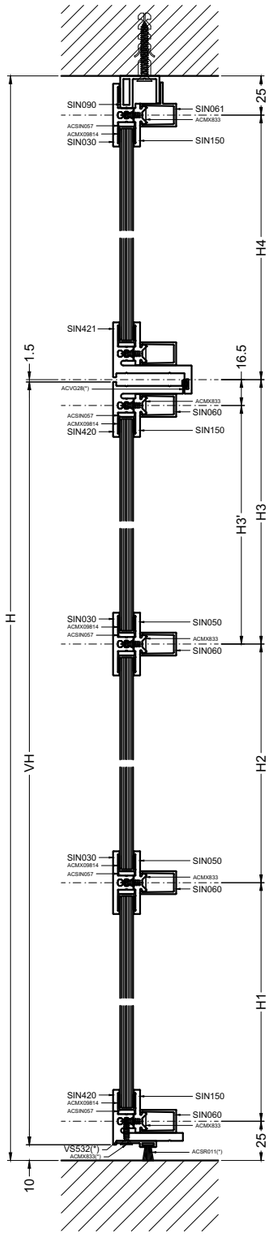


BUITENKADER
DORMANT
BLENDRAHMEN
OUTER FRAME

| | | | | |
|---|---|---|---|---|
| SIN090 | | 2 | | H |
| | | 1 | | B-35 |
| SIN421 | | 2 | | H1+H2+H3+29 |
| | | 1 | | B-10 |
| SIN030 | | 2 | | H4-1 |
| | | 1 | | B-59 |
| SIN150 | | 2 | | H1+H2+H3+9 |
| | | 2 | | H4-28.5 |
| | | 2 | | B-90 |
| SIN061 | | 1 | | H-4.2 |
| | | 1 | | H-4.2 |
| | | 1 | | B-8.4 |
| SIN060 | | 1 | | B-64.6 |

(*) OPTIONEEL
EN OPTION
FAKULTATIV
OPTIONAL

VLEUGEL
OUVRANT
FLUGEL
VENT

| | | | | |
|---|---|---|---|---|
| SIN420 | | 2 | | VH |
| | | 2 | | VB-15 |
| SIN030 | | 2 | | VB-39 |
| SIN050 | | 2 | | VB-15 |
| SIN060 | | 2 | | VB-15 |
| SIN150 | | 2 | | VB-15 |
| | | 2 | | H1-40 |
| | | 2 | | H2-40 |
| | | 2 | | H3'-40 |
| SIN060 | | 2 | | VB-15 |
| | | 2 | | H1-14.6 |
| | | 2 | | H2-14.6 |
| | | 2 | | H3'-14.6 |
| SIN121 | | 1 | | H2-15 |
| VS532 (*) | | 1 | | VB-5 |

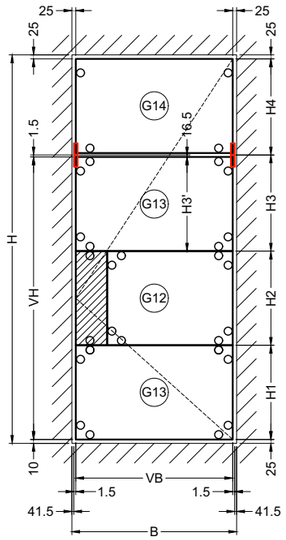


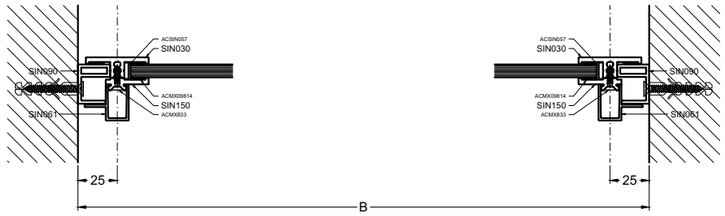


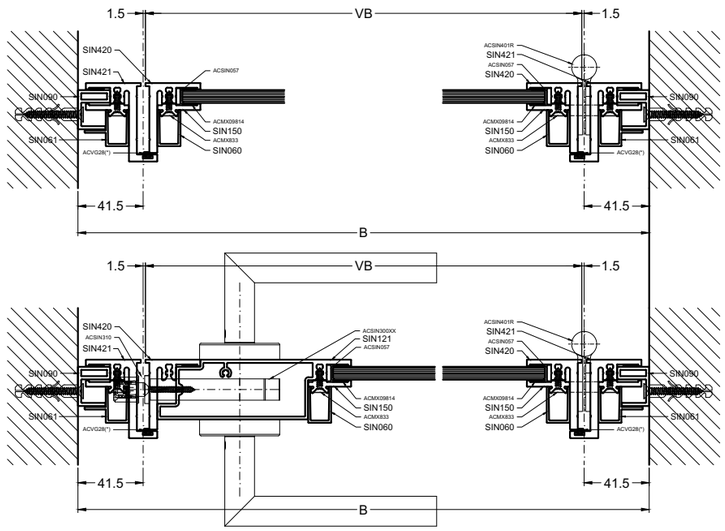


VAST ONDERDEEL
PARTIE FIXE
FESTER TEIL
FIXED PART

| | |
|---|---|
| G14 | H4-33.5<br>B-67 |

VLEUGEL
OUVRANT
FLUGEL
VENT

| | |
|---|---|
| G11 | H1-17<br>VB-47 |
| G12 | H2-17<br>VB-143 |
| G13 | H3'-17<br>VB-47 |

OVERZICHT SLOTEN, ZIE WERKTEKENINGEN
APERCU SERRURES, VOIR LES DESSINS DE CONSTOUCTION
UEBERSICHT SCHLOESSER, SIEHE KONSTRUKTIONZEICHNUNGEN
OVERVIEW LOCKS, SEE CONSTRUCTION DRAWINGS

| | |
|---|---|
| ACSIN057 | 32 |
| ACSIN030 | 2 |
| ACSIN401R(L) OF / OU / OGEE / OR ACSIN402R(L) | 4 |
| ACMX09814 | 4H+H2+9B |
| ACMX09814 OF / OU / OGEE / OR ACMX09816 | 2H+8B |
| ACSR011 (*) | VB |
| ACVG28 (*) | 2(H-H4)+B |

| | | |
|---|---|---|
| VB | VLEUGELBREEDTE<br>LARGEUR VANTAIL<br>BREITE FLUGEL<br>WIDTH SASH | B-86 |
| VH | VLEUGELHOOGTE<br>HAUTEUR D'OUVRANT<br>FLUGEL HOHE<br>VENT HEIGHT | H-H4-36.5 |
| H3' | | H3-16.5 |

ZAAGTABELLEN-COUPES ET DEBITS-ZUSCHNITTSTABELLEN-FABRICATION CHARTS

# SCHARNIER002A_SLOT(400)

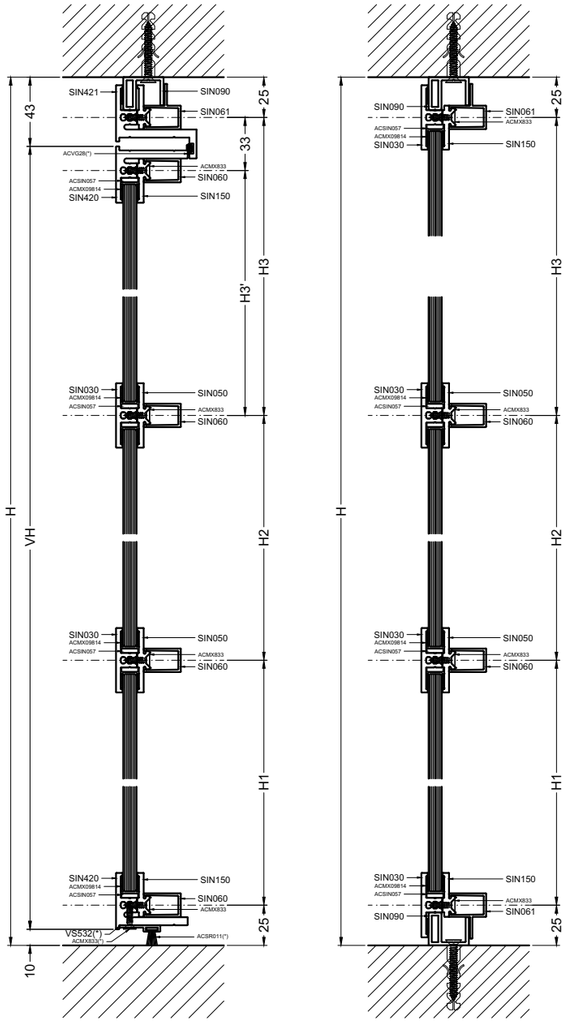


BUITENKADER
DORMANT
BLENDRAHMEN
OUTER FRAME

| | | | | |
|---|---|---|---|---|
| SIN090 | | 2 | | H |
| | | 1 | | B-35 |
| | | 1 | | B2-1.5 |
| SIN421 | | 2 | | H-5 |
| | | 1 | | B1+8 |
| SIN030 | | 1 | | H-10 |
| | | 4 | | B2-25.5 |
| SIN050 | | 2 | | B2-29 |
| SIN150 | | 1 | | H-19.5 |
| | | 1 | | H-39 |
| | | 1 | | B1+18 |
| | | 2 | | B2-29 |
| | | 1 | | H1-40 |
| | | 1 | | H2-40 |
| | | 1 | | H3-40 |
| SIN061 | | 1 | | H-4.2 |
| | | 1 | | H-8.4 |
| | | 1 | | B-8.4 |
| | | 1 | | B2+11.8 |
| SIN060 | | 2 | | B2-16.5 |
| | | 1 | | H1-14.6 |
| | | 1 | | H2-14.6 |
| | | 1 | | H3-14.6 |

VLEUGEL
OUVRANT
FLUGEL
VENT

| | | | | |
|---|---|---|---|---|
| SIN420 | | 2 | | VH |
| | | 2 | | VB-15 |
| SIN030 | | 2 | | VB-39 |
| SIN050 | | 2 | | VB-15 |
| SIN060 | | 2 | | VB-15 |
| SIN150 | | 2 | | VB-15 |
| | | 2 | | H1-40 |
| | | 2 | | H2-40 |
| | | 2 | | H3'-40 |
| SIN060 | | 2 | | VB-15 |
| | | 2 | | H1-14.6 |
| | | 2 | | H2-14.6 |
| | | 2 | | H3'-14.6 |
| SIN121 | | 1 | | H2-15 |
| VS532 (*) | | 1 | | VB-5 |

| | |
|---|---|
| ACSIN057 | 38 |
| ACSIN030 | 1 |
| ACSIN401R(L) OF / OU / ODER / OR ACSIN402R(L) | 4 |
| ACMX09814 | 6H+H2+7B+B2 |
| ACMX09814 BF / OU / ODER / OR ACMX09816 | 4H+6B |
| ACSR011 (*) | VB |
| ACVG28 (*) | 2H+B1 |

OVERZICHT SLOTEN, ZIE WERKTEKENINGEN
APERCU SERRURES, VOIR LES DESSINS DE CONSTOUCTION
UEBERSICHT SCHLOESSER, SIEHE KONSTRUKTIONZEICHNUNGEN
OVERVIEW LOCKS, SEE CONSTRUCTION DRAWINGS

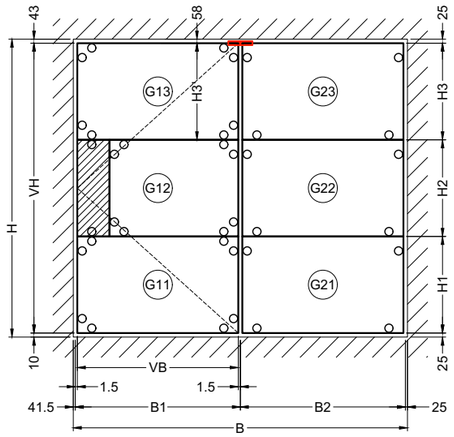


VAST ONDERDEEL
PARTIE FIXE
FESTER TEIL
FIXED PART

| | |
|---|---|
| G21 | H1-17<br>B2-33.5 |
| G22 | H2-17<br>B2-33.5 |
| G23 | H3-17<br>B2-33.5 |

VLEUGEL
OUVRANT
FLUGEL
VENT

| | |
|---|---|
| G11 | H1-17<br>VB-47 |
| G12 | H2-17<br>VB-143 |
| G13 | H3'-17<br>VB-47 |

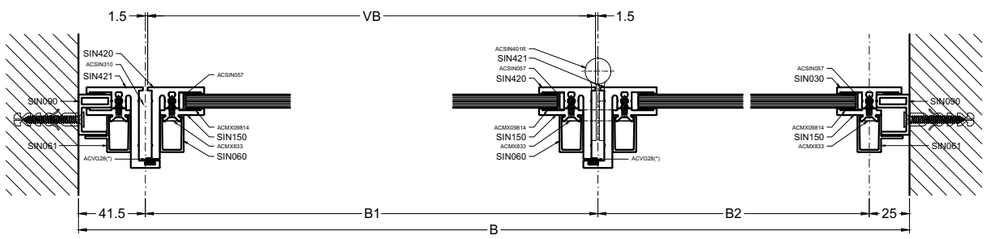


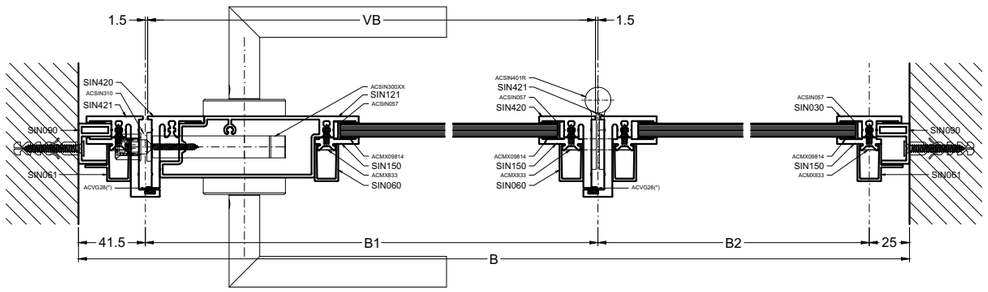


| | | |
|---|---|---|
| VB | VLEUGELBREEDTE<br>LARGEUR VANTAIL<br>BREITE FLUGEL<br>WIDTH SASH | B1-3 |
| VH | VLEUGELHOOGTE<br>HAUTEUR D'OUVRANT<br>FLUGEL HOHE<br>VENT HEIGHT | H-53 |
| H3' | | H3-33 |

| | |
|---|---|
| (*) | OPTIONEEL<br>EN OPTION<br>FAKULTATIV<br>OPTIONAL |

# SCHARNIER003A_SLOT(400)

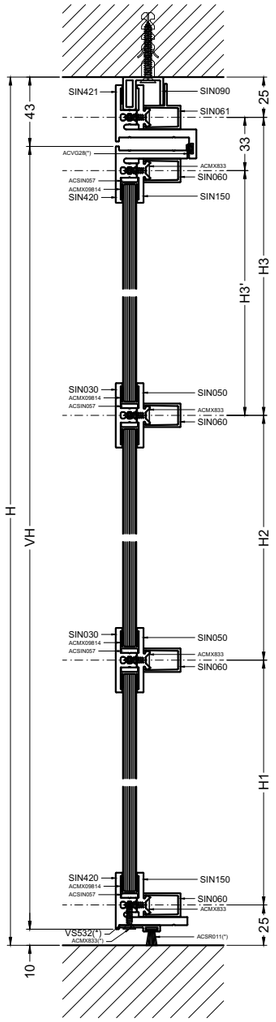


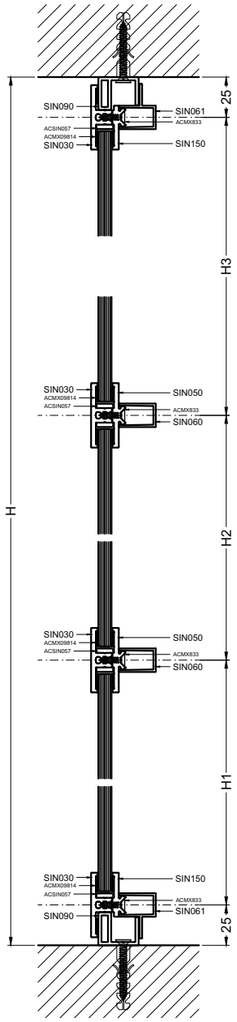


BUITENKADER
DORMANT
BLENDRAHMEN
OUTER FRAME

| | | | |
|---|---|---|---|
| SIN090 | 2 | | H |
| | 1 | | B-35 |
| | 1 | | B1-1.5 |
| | 1 | | B3-1.5 |
| SIN421 | 2 | | H-5 |
| | 1 | | B2+8 |
| SIN030 | 2 | | H-10 |
| | 4 | | B1-25.5 |
| | 4 | | B3-25.5 |
| SIN050 | 2 | | B1-29 |
| | 2 | | B3-29 |
| SIN150 | 2 | | H-39 |
| | 1 | | B2+18 |
| | 2 | | B1-29 |
| | 2 | | B3-29 |
| | 2 | | H1-40 |
| | 2 | | H2-40 |
| | 2 | | H3-40 |
| SIN061 | 2 | | H-8.4 |
| | 1 | | B-8.4 |
| | 1 | | B1+11.8 |
| | 1 | | B3+11.8 |
| SIN060 | 2 | | B1-16.5 |
| | 2 | | B3-16.5 |
| | 2 | | H1-14.6 |
| | 2 | | H2-14.6 |
| | 2 | | H3-14.6 |

VLEUGEL
OUVRANT
FLUGEL
VENT

| | | | |
|---|---|---|---|
| SIN420 | 2 | | VH |
| | 2 | | VB-15 |
| SIN030 | 2 | | VB-39 |
| SIN050 | 2 | | VB-15 |
| SIN060 | 2 | | VB-15 |
| SIN150 | 2 | | VB-15 |
| | 2 | | H1-40 |
| | 2 | | H2-40 |
| | 2 | | H3'-40 |
| SIN060 | 2 | | VB-15 |
| | 2 | | H1-14.6 |
| | 2 | | H2-14.6 |
| | 2 | | H3'-14.6 |
| SIN121 | 1 | | H2-15 |
| VS532 (*) | 1 | | VB-5 |

| | |
|---|---|
| ACSIN057 | 50 |
| ACSIN030 | 2 |
| ACSIN401R(L) or / ou / oder / o/e ACSIN402R(L) | 4 |
| ACMX09814 | 8H+H2+7B+B1+B3 |
| ACMX09814 or / ou / oder / o/e ACMX09816 | 6H+6B |
| ACSR011 (*) | VB |
| ACVG28 (*) | 2H+B2 |

OVERZICHT SLOTEN, ZIE WERKTEKENINGEN
APERCU SERRURES, VOIR LES DESSINS DE CONSTOUCTION
UEBERSICHT SCHLOESSER, SIEHE KONSTRUKTIONZEICHNUNGEN
OVERVIEW LOCKS, SEE CONSTRUCTION DRAWINGS

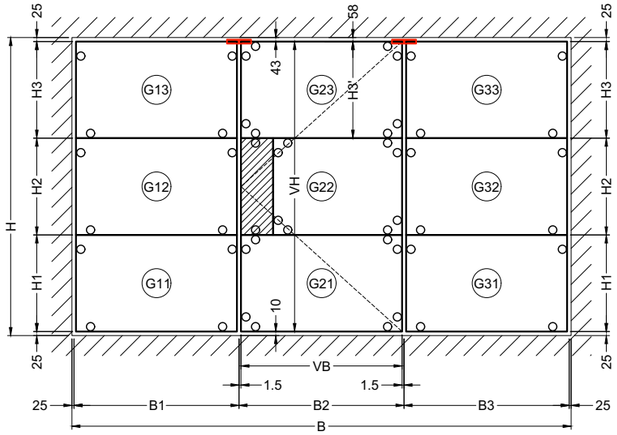


VAST ONDERDEEL
PARTIE FIXE
FESTER TEIL
FIXED PART

| | |
|---|---|
| G11 | H1-17<br>B1-33.5 |
| G12 | H2-17<br>B1-33.5 |
| G13 | H3-17<br>B1-33.5 |

| | |
|---|---|
| G31 | H1-17<br>B3-33.5 |
| G32 | H2-17<br>B3-33.5 |
| G33 | H3-17<br>B3-33.5 |

VLEUGEL
OUVRANT
FLUGEL
VENT

| | |
|---|---|
| G21 | H1-17<br>VB-47 |
| G22 | H2-17<br>VB-143 |
| G23 | H3'-17<br>VB-47 |

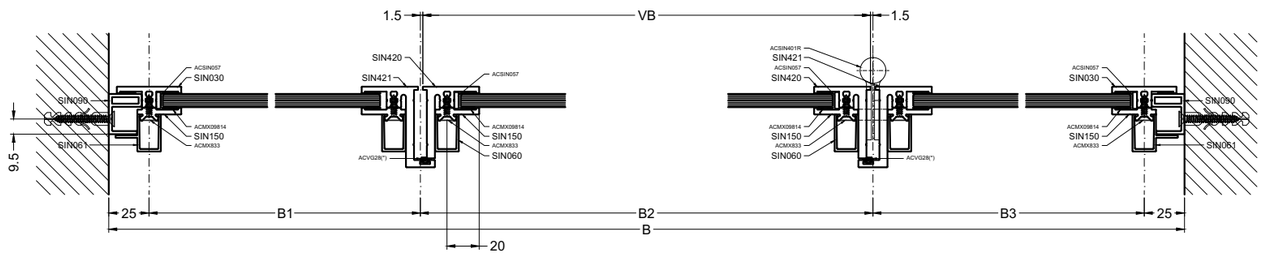


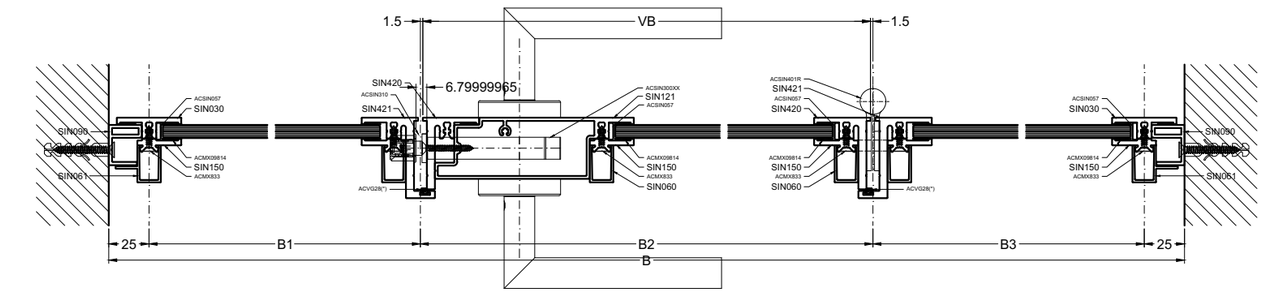


| | | |
|---|---|---|
| VB | VLEUGELBREEDTE<br>LARGEUR VANTAIL<br>BREITE FLUGEL<br>WIDTH SASH | B2-3 |
| VH | VLEUGELHOOGTE<br>HAUTEUR D'OUVRANT<br>FLUGEL HOHE<br>VENT HEIGHT | H-53 |
| H3' | | H3-33 |

| | |
|---|---|
| (*) | OPTIONEEL<br>EN OPTION<br>FAKULTATIV<br>OPTIONAL |

# SCHARNIER003B_SLOT(400)

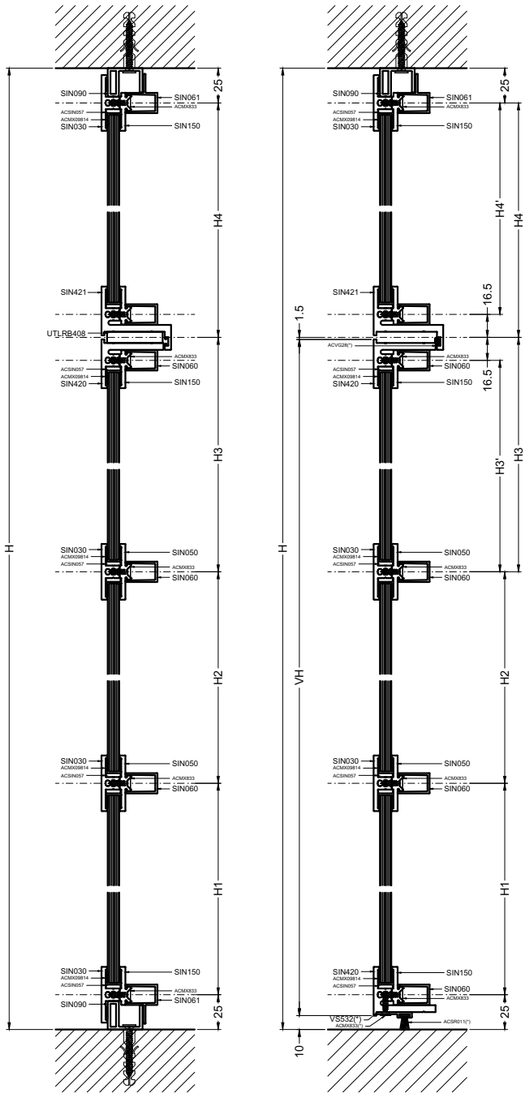


BUITENKADER
DORMANT
BLENDRAHMEN
OUTER FRAME

| | | | | |
|---|---|---|---|---|
| SIN090 | | 2 | | H |
| | | 1 | | B-35 |
| | | 1 | | B1-1.5 |
| | | 1 | | B3-1.5 |
| SIN421 | | 2 | | H-5 |
| | | 1 | | B1-13.5 |
| | | 1 | | B2+8 |
| | | 1 | | B3-13.5 |
| SIN420 | | 2 | | H4-13.5 |
| | | 1 | | B1-13.5 |
| | | 1 | | B3-13.5 |
| UTLRB408 | | 2 | | H4-28.5 |
| | | 1 | | B1-28.5 |
| | | 1 | | B3-28.5 |
| SIN030 | | 2 | | H-10 |
| | | 1 | | B-59 |
| | | 3 | | B1-25.5 |
| | | 3 | | B3-25.5 |

| | | | | |
|---|---|---|---|---|
| SIN050 | | 2 | | B1-29 |
| | | 2 | | B3-29 |
| SIN150 | | 2 | | H1+H2+H3-3.5 |
| | | 3 | | B1-29 |
| | | 3 | | B3-29 |
| | | 2 | | H1-40 |
| | | 2 | | H2-40 |
| | | 2 | | H3-56.5 |
| | | 1 | | B-90 |
| | | 1 | | B2-18 |
| | | 1 | | H4-56.5 |
| SIN061 | | 2 | | H-8.4 |
| | | 1 | | B-8.4 |
| | | 1 | | B1+11.8 |
| | | 1 | | B3+11.8 |
| SIN060 | | 4 | | B1-16.5 |
| | | 4 | | B3-16.5 |
| | | 1 | | B2-18 |
| | | 2 | | H1-14.6 |
| | | 2 | | H2-14.6 |
| | | 2 | | H3-31.1 |
| | | 4 | | H4-31.1 |

VLEUGEL
OUVRANT
FLUGEL
VENT

| | | | | |
|---|---|---|---|---|
| SIN420 | | 2 | | VH |
| | | 2 | | VB-15 |
| SIN030 | | 2 | | VB-39 |
| SIN050 | | 2 | | VB-15 |
| SIN060 | | 2 | | VB-15 |
| SIN150 | | 2 | | VB-15 |
| | | 2 | | H1-40 |
| | | 2 | | H2-40 |
| | | 2 | | H3'-40 |
| SIN060 | | 2 | | VB-15 |
| | | 2 | | H1-14.6 |
| | | 2 | | H2-14.6 |
| | | 2 | | H3'-14.6 |
| SIN121 | | 1 | | H2-15 |
| VS532 (*) | | 1 | | VB-5 |

OVERZICHT SLOTEN, ZIE WERKTEKENINGEN
APERCU SERRURES, VOIR LES DESSINS DE CONSTOUCTION
UEBERSICHT SCHLOESSER, SIEHE KONSTRUKTIONZEICHNUNGEN
OVERVIEW LOCKS, SEE CONSTRUCTION DRAWINGS

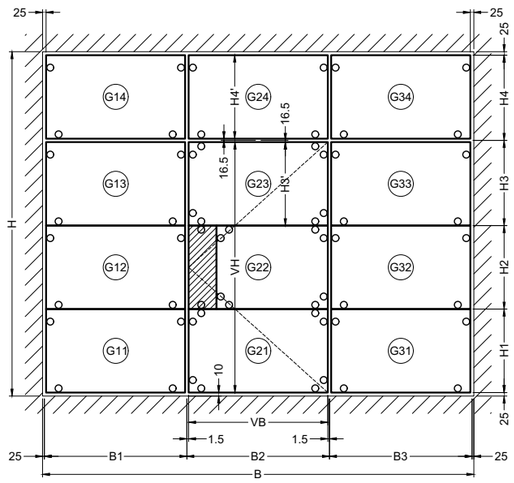


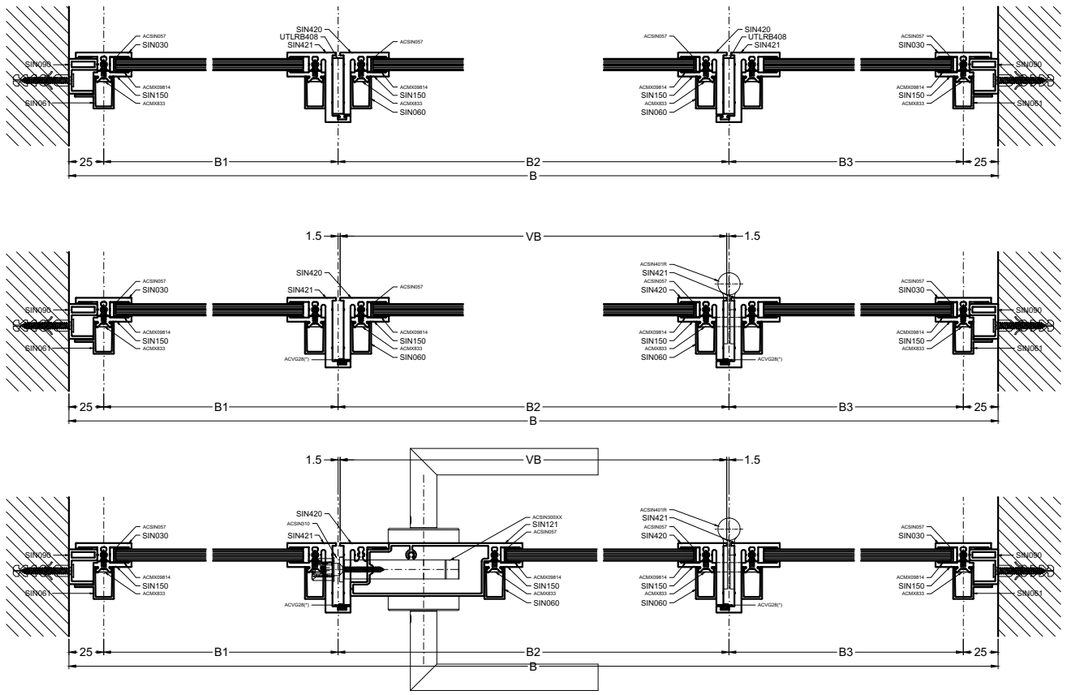


VAST ONDERDEEL
PARTIE FIXE
FESTER TEIL
FIXED PART

| | |
|---|---|
| G11 | H1-17<br>B1-33.5 |
| G12 | H2-17<br>B1-33.5 |
| G13 | H3'-17<br>B1-33.5 |
| G14 | H4'-17<br>B1-33.5 |

| | |
|---|---|
| G31 | H1-17<br>B3-33.5 |
| G32 | H2-17<br>B3-33.5 |
| G33 | H3'-17<br>B3-33.5 |
| G34 | H4'-17<br>B3-33.5 |

VLEUGEL
OUVRANT
FLUGEL
VENT

| | |
|---|---|
| G11 | H1-17<br>VB-47 |
| G12 | H2-17<br>VB-143 |
| G13 | H3'-17<br>VB-47 |

| | |
|---|---|
| G14 | H4'-17<br>B2-33.5 |

| | |
|---|---|
| ACSIN057 | 65 |
| ACSIN401R(L)<br>SF-150 / 10000 / UB<br>ACSIN402R(L) | 4 |
| ACMX09814 | 5H+H2+10B |
| ACMX09814<br>SF-150 / 10000 / UB<br>ACMX09816 | 6H+8B |
| ACSR011 (*) | VB |
| ACVG28 (*) | 2(H-H4)+B2 |

| | | |
|---|---|---|
| VB | VLEUGELBREEDTE<br>LARGEUR VANTAIL<br>BREITE FLUGEL<br>WIDTH SASH | B2-3 |
| VH | VLEUGELHOOGTE<br>HAUTEUR D'OUVRANT<br>FLUGEL HOHE<br>VENT HEIGHT | H-H4-36.5 |
| H3' | | H3-16.5 |
| H4' | | H4-16.5 |

# SCHARNIER001A_SLOT

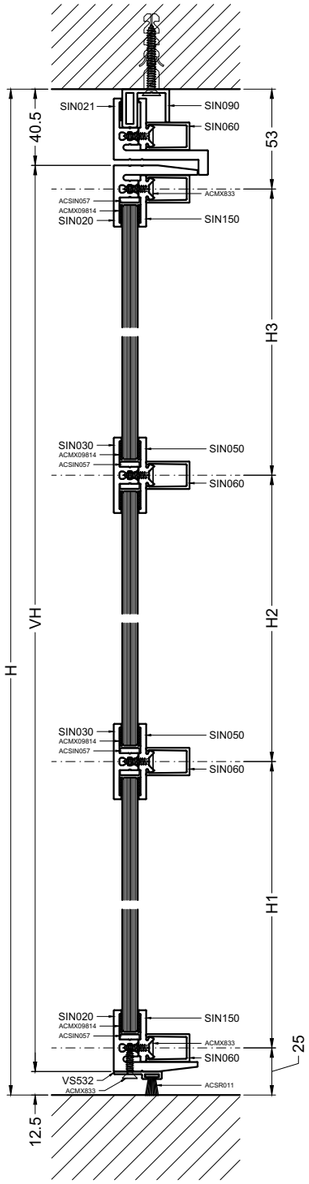


| | | | | |
|---|---|---|---|---|
| BUITENKADER DORMANT BLENDRAHMEN OUTER FRAME | SIN090 | 2 | | H |
| | | 1 | | B-35 |
| | SIN021 | 2 | | H-5 |
| | | 1 | | B-75 |
| | SIN150 | 2 | | H-5 |
| | | 1 | | B-64.6 |
| | SIN060 | 2 | | H-17.7 |
| | | 1 | | B-64.6 |
| VLEUGEL OUVRANT FLUGEL VENT | SIN020 | 2 | | VH |
| | | 2 | | VB-10 |
| | SIN030 | 2 | | VB-34 |
| | SIN050 | 2 | | VB-10 |
| | SIN060 | 2 | | VB-10 |
| | SIN150 | 2 | | VB-10 |
| | | 2 | | H1-40 |
| | | 2 | | H2-40 |
| | | 2 | | H3-40 |
| | SIN060 | 2 | | VB-10 |
| | | 2 | | H1-14.6 |
| | | 2 | | H2-14.6 |
| | | 2 | | H3-14.6 |
| | SIN121 | 1 | | H2-15 |
| | VS532 (*) | 1 | | VB |

| | |
|---|---|
| ○ ACSIN057 | 28 |
| ACSIN400R(L) | 4 |
| ACMX09814 | 4H+H2+7B |
| ACMX09814 OF / OU / ODER / OR ACMX09816 | 2H+6B |
| ACSR011 (*) | VB |

| | | |
|---|---|---|
| VB | VLEUGELBREEDTE<br>LARGEUR VANTAIL<br>BREITE FLUGEL<br>WIDTH SASH | B-81 |
| VH | VLEUGELHOOGTE<br>HAUTEUR D'OUVRANT<br>FLUGEL HOHE<br>VENT HEIGHT | H-53 |

OVERZICHT SLOTEN, ZIE WERKTEKENINGEN
APERCU SERRURES, VOIR LES DESSINS DE CONSTOUCTION
UEBERSICHT SCHLOESSER, SIEHE KONSTRUKTIONZEICHNUNGEN
OVERVIEW LOCKS, SEE CONSTRUCTION DRAWINGS

(*) OPTIONEEL
EN OPTION
FAKULTATIV
OPTIONAL

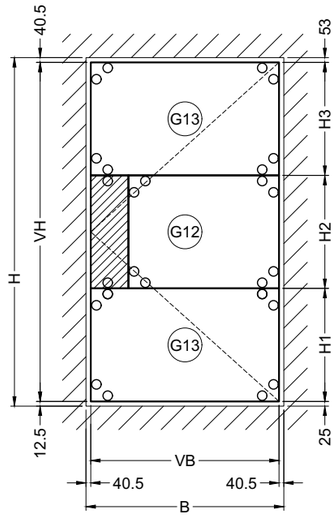


| VLEUGEL OUVRANT FLUGEL VENT | |
|---|---|
| G11 | H1-17<br>VB-42 |
| G12 | H2-17<br>VB-138 |
| G13 | H3-17<br>VB-42 |

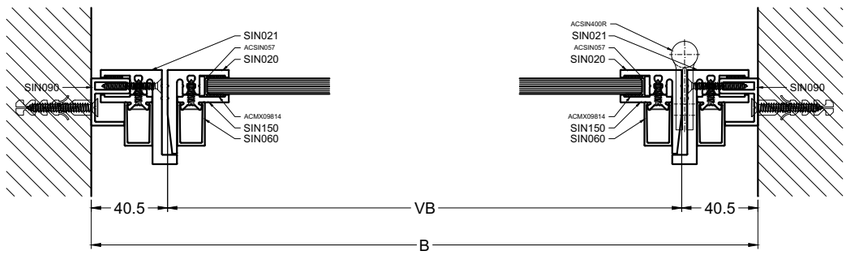


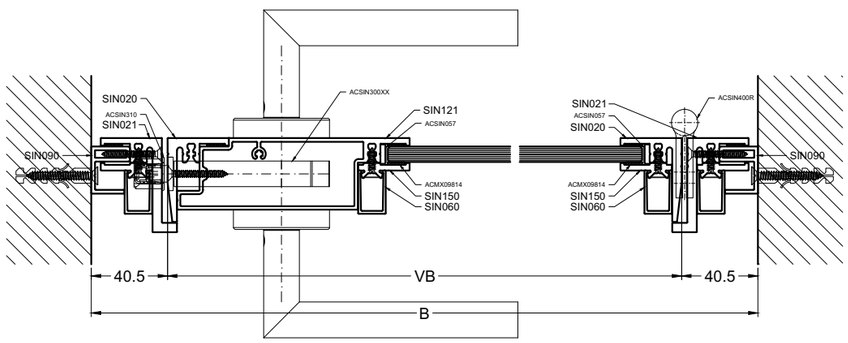


SCHARNIER001A_SLOT

# SCHARNIER001A2_SLOT

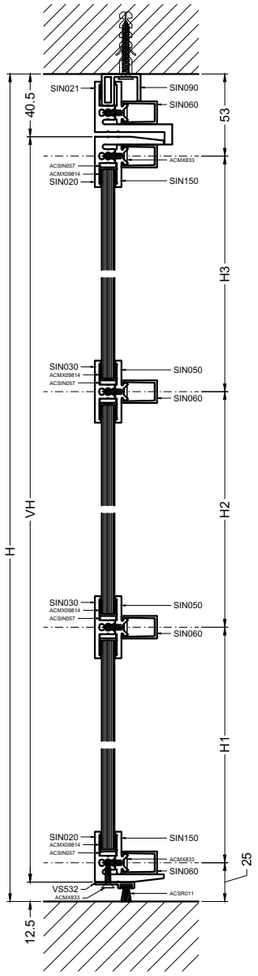


BUITENKADER
DORMANT
BLENDRAHMEN
OUTER FRAME

| | | | | |
|---|---|---|---|---|
| SIN090 | | 2 | | H |
| | | 1 | | B-35 |
| SIN021 | | 2 | | H-5 |
| | | 1 | | B-75 |
| SIN150 | | 2 | | H-5 |
| | | 1 | | B-64.6 |
| SIN060 | | 2 | | H-17.7 |
| | | 1 | | B-64.6 |

PRIMAIRE VLEUGEL
PREMIERE VANTAIL
GANGFLEUGEL
FIRST VENT

| | | | | |
|---|---|---|---|---|
| SIN020 | | 2 | | VH |
| | | 2 | | VB2-10 |
| SIN030 | | 2 | | VB2-34 |
| SIN050 | | 2 | | VB2-10 |
| SIN060 | | 2 | | VB2-10 |
| SIN150 | | 2 | | VB2-10 |
| | | 2 | | H1-40 |
| | | 2 | | H2-40 |
| | | 2 | | H3-40 |
| SIN060 | | 2 | | VB2-10 |
| | | 2 | | H1-14.6 |
| | | 2 | | H2-14.6 |
| | | 2 | | H3-14.6 |
| SIN121 | | 1 | | H2-15 |
| VS532 (*) | | 1 | | VB2 |

OVERZICHT SLOTEN, ZIE WERKTEKENINGEN
APERCU SERRURES, VOIR LES DESSINS DE CONSTOUCTION
UEBERSICHT SCHLOESSER, SIEHE KONSTRUKTIONZEICHNUNGEN
OVERVIEW LOCKS, SEE CONSTRUCTION DRAWINGS

SECUNDAIRE VLEUGEL
DEUXIEME VANTAIL
STANDFLEUGEL
SECOND VENT

| | | | | |
|---|---|---|---|---|
| SIN020 | | 1 | | VH |
| | | 2 | | VB1-10 |
| SIN021 | | 1 | | VH |
| SIN030 | | 2 | | VB1-34 |
| SIN050 | | 2 | | VB1-10 |
| SIN060 | | 2 | | VB1-10 |
| SIN150 | | 2 | | VB1-37.5 |
| | | 1 | | H1-40 |
| | | 1 | | H1-12.5 |
| | | 2 | | H2-40 |
| | | 1 | | H3-40 |
| | | 1 | | H3-122.5 |
| SIN060 | | 2 | | VB1-24.8 |
| | | 1 | | H1-14.6 |
| | | 1 | | H1-139.8 |
| | | 2 | | H2-14.6 |
| | | 1 | | H3-14.6 |
| | | 1 | | H3-139.8 |
| SIN121 | | 1 | | H2-15 |
| VS532 (*) | | 1 | | VB1 |

| | |
|---|---|
| ACSIN057 | 56 |
| ACSIN400R | 4 |
| ACSIN400L | 4 |
| ACMX09814 | 6H+2H2+7B |
| ACMX09814 OF / OU / ODER / OR ACMX09816 | 4H+6B |
| ACSR011 (*) | VB1+VB2 |
| ACSIN330 | 2 |
| ACSIN331 | 1 |
| ACSIN340 | 2 |

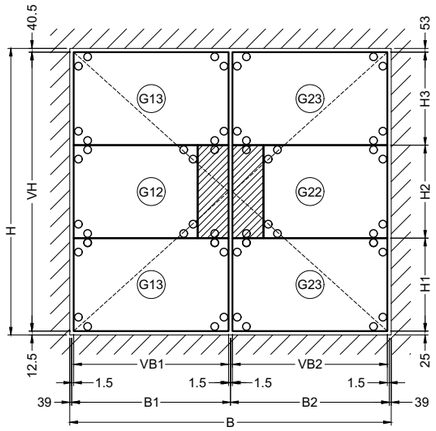


PRIMAIRE VLEUGEL
PREMIERE VANTAIL
GANGFLEUGEL
FIRST VENT

| | |
|---|---|
| G21 | H1-17<br>VB2-42 |
| G22 | H2-17<br>VB2-138 |
| G23 | H3-17<br>VB2-42 |

SECUNDAIRE VLEUGEL
DEUXIEME VANTAIL
STANDFLEUGEL
SECOND VENT

| | |
|---|---|
| G11 | H1-17<br>VB1-42 |
| G12 | H2-17<br>VB1-138 |
| G13 | H3-17<br>VB1-42 |

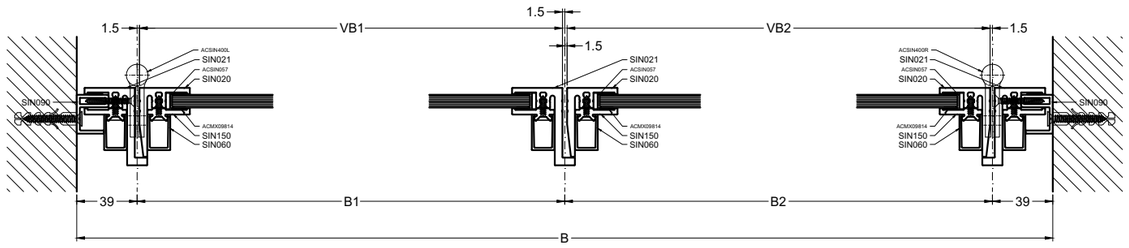


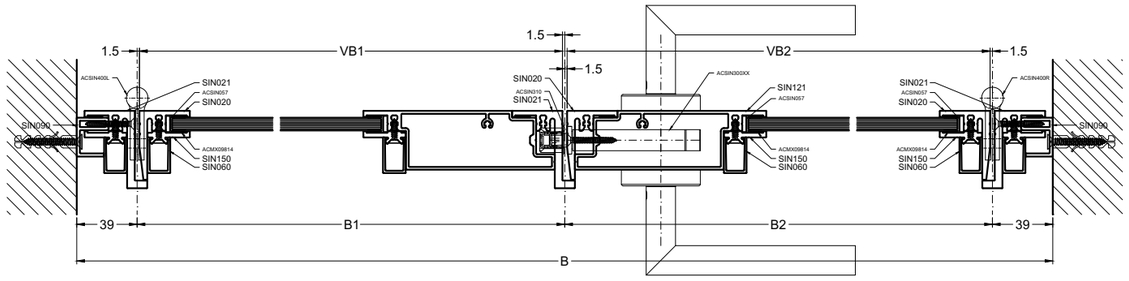


| | | |
|---|---|---|
| VB1<br>VB2 | VLEUGELBREEDTE<br>LARGEUR VANTAIL<br>BREITE FLUGEL<br>WIDTH SASH | B1-3<br>B2-3 |
| VH | VLEUGELHOOGTE<br>HAUTEUR D'OUVRANT<br>FLUGEL HOHE<br>VENT HEIGHT | H-53 |

| | |
|---|---|
| (*) | OPTIONEEL<br>EN OPTION<br>FAKULTATIV<br>OPTIONAL |

# SCHARNIER001A3_SLOT

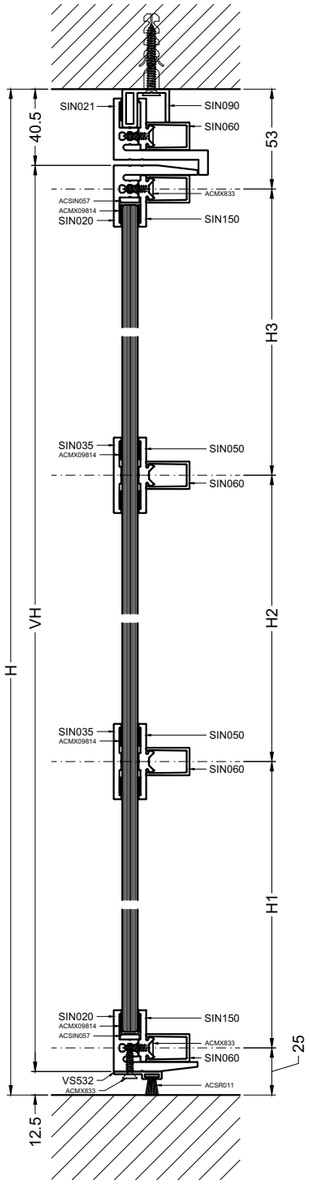


| | | | | |
|---|---|---|---|---|
| BUITENKADER DORMANT BLENDRAHMEN OUTER FRAME | SIN090 | 2 | | H |
| | | 1 | | B-35 |
| | SIN021 | 2 | | H-5 |
| | | 1 | | B-75 |
| | SIN150 | 2 | | H-5 |
| | | 1 | | B-64.6 |
| | SIN060 | 2 | | H-17.7 |
| | | 1 | | B-64.6 |
| VLEUGEL OUVRANT FLUGEL VENT | SIN020 | 2 | | VH |
| | | 2 | | VB-10 |
| | SIN035 | 2 | | VB-161 |
| | SIN050 | 2 | | VB-106 |
| | SIN060 | 2 | | VB-106 |
| | SIN150 | 2 | | VB-106 |
| | | 2 | | H1-40 |
| | | 2 | | H2-40 |
| | | 2 | | H3-40 |
| | SIN060 | 2 | | VB-106 |
| | | 2 | | H1-14.6 |
| | | 2 | | H2-14.6 |
| | | 2 | | H3-14.6 |
| | SIN121 | 1 | | VH-40 |
| | VS532 (*) | 1 | | VB |

| | |
|---|---|
| ACSIN057 | 8 |
| ACSIN400R(L) | 4 |
| ACMX09814 | 5H+6VB |
| ACMX09814 OF / OU / ODER / OR ACMX09816 | 2H+B |
| ACSR011 (*) | VB |

| | | |
|---|---|---|
| VB | VLEUGELBREEDTE<br>LARGEUR VANTAIL<br>BREITE FLUGEL<br>WIDTH SASH | B-81 |
| VH | VLEUGELHOOGTE<br>HAUTEUR D'OUVRANT<br>FLUGEL HOHE<br>VENT HEIGHT | H-53 |

OVERZICHT SLOTEN, ZIE WERKTEKENINGEN
APERCU SERRURES, VOIR LES DESSINS DE CONSTOUCTION
UEBERSICHT SCHLOESSER, SIEHE KONSTRUKTIONZEICHNUNGEN
OVERVIEW LOCKS, SEE CONSTRUCTION DRAWINGS

(*) OPTIONEEL
EN OPTION
FAKULTATIV
OPTIONAL

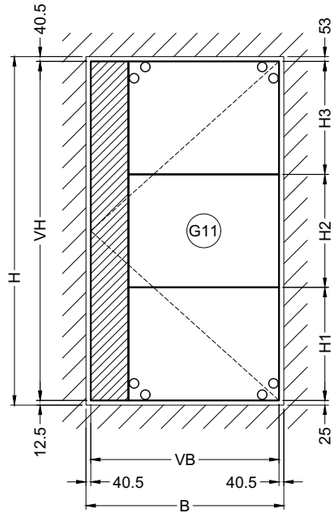


| | | |
|---|---|---|
| VLEUGEL OUVRANT FLUGEL VENT | G11 | VH-42<br>VB-138 |

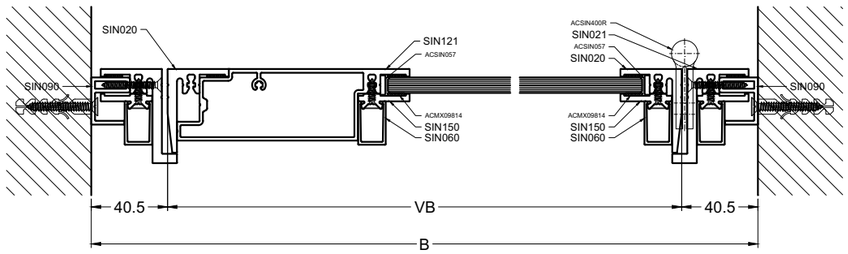


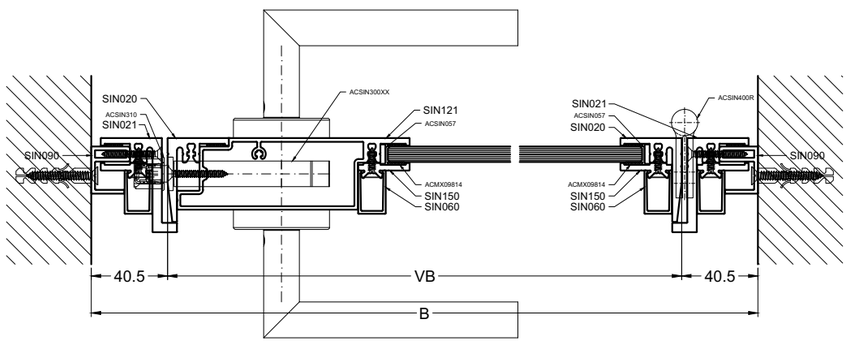


SCHARNIER001A3_SLOT

aliplast member of CORIALIS

# SCHARNIER002A_SLOT

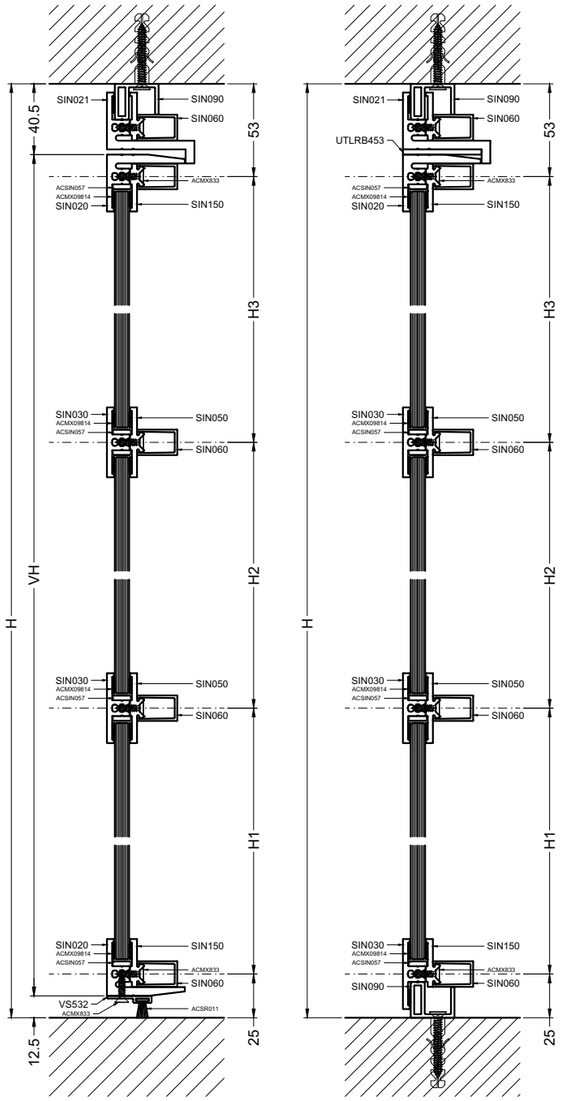


| | | |
|---|---|---|
| VB1 | VLEUGELBREEDTE<br>LARGEUR VANTAIL<br>BREITE FLUGEL<br>WIDTH SASH | B1-3 |
| VH | VLEUGELHOOGTE<br>HAUTEUR D'OUVRANT<br>FLUGEL HOHE<br>VENT HEIGHT | H-53 |

VAST ONDERDEEL
PARTIE FIXE
FESTER TEIL
FIXED PART

| | | | |
|---|---|---|---|
| SIN090 | 2 | | H |
| | 1 | | B-35 |
| SIN021 | 2 | | H-5 |
| | 1 | | B-75 |
| SIN150 | 2 | | H-5 |
| | 1 | | B-64.6 |
| SIN060 | 2 | | H-17.7 |
| | 1 | | B-64.6 |
| SIN021 | 1 | | H-37.5 |
| UTLRB453 | 1 | | H-37.5 |
| | 1 | | B2-35.5 |
| SIN020 | 1 | | H-40.5 |
| | 1 | | B2-13 |
| SIN090 | 1 | | B2-13 |
| SIN030 | 3 | | B2-37 |
| SIN050 | 2 | | B2-13 |
| SIN060 | 2 | | B2-13 |
| SIN150 | 2 | | B2-13 |
| | 2 | | H1-40 |
| | 2 | | H2-40 |
| | 2 | | H3-40 |
| SIN060 | 2 | | B2-13 |
| | 2 | | H1-14.6 |
| | 2 | | H2-14.6 |
| | 2 | | H3-14.6 |

VLEUGEL
OUVRANT
FLUGEL
VENT

| | | | |
|---|---|---|---|
| SIN020 | 2 | | VH |
| | 2 | | VB1-10 |
| SIN030 | 2 | | VB1-34 |
| SIN050 | 2 | | VB1-10 |
| SIN060 | 2 | | VB1-10 |
| SIN150 | 2 | | VB1-10 |
| | 2 | | H1-40 |
| | 2 | | H2-40 |
| | 2 | | H3-40 |
| SIN060 | 2 | | VB1-10 |
| | 2 | | H1-14.6 |
| | 2 | | H2-14.6 |
| | 2 | | H3-14.6 |
| SIN121 | 1 | | H2-15 |
| VS532 (*) | 1 | | VB1 |

| | |
|---|---|
| ACSIN057 | 40 |
| ACSIN400R(L) | 4 |
| ACMX09814 | 6H+H2+7B+B2 |
| ACMX09814<br>AF 150 / 5.0/6K / 0M<br>ACMX09816 | 4H+6B |
| ACSR011 (*) | VB1 |

OVERZICHT SLOTEN, ZIE WERKTEKENINGEN
APERCU SERRURES, VOIR LES DESSINS DE CONSTOUCTION
UEBERSICHT SCHLOESSER, SIEHE KONSTRUKTIONZEICHNUNGEN
OVERVIEW LOCKS, SEE CONSTRUCTION DRAWINGS

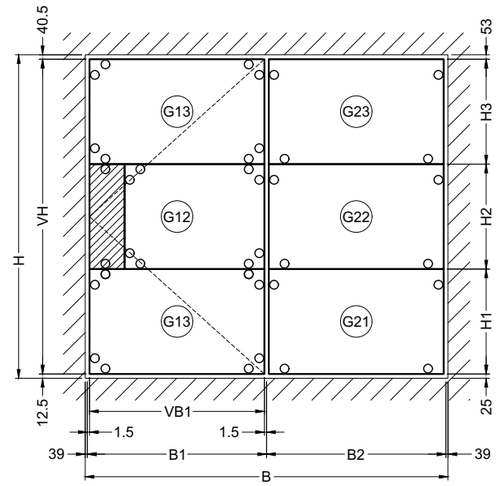


VAST ONDERDEEL
PARTIE FIXE
FESTER TEIL
FIXED PART

| | |
|---|---|
| G21 | H1-17<br>B2-45 |
| G22 | H2-17<br>B2-45 |
| G23 | H3-17<br>B2-45 |

VLEUGEL
OUVRANT
FLUGEL
VENT

| | |
|---|---|
| G11 | H1-17<br>VB1-42 |
| G12 | H2-17<br>VB1-138 |
| G13 | H3-17<br>VB1-42 |

| | |
|---|---|
| (*) | OPTIONEEL<br>EN OPTION<br>FAKULTATIV<br>OPTIONAL |

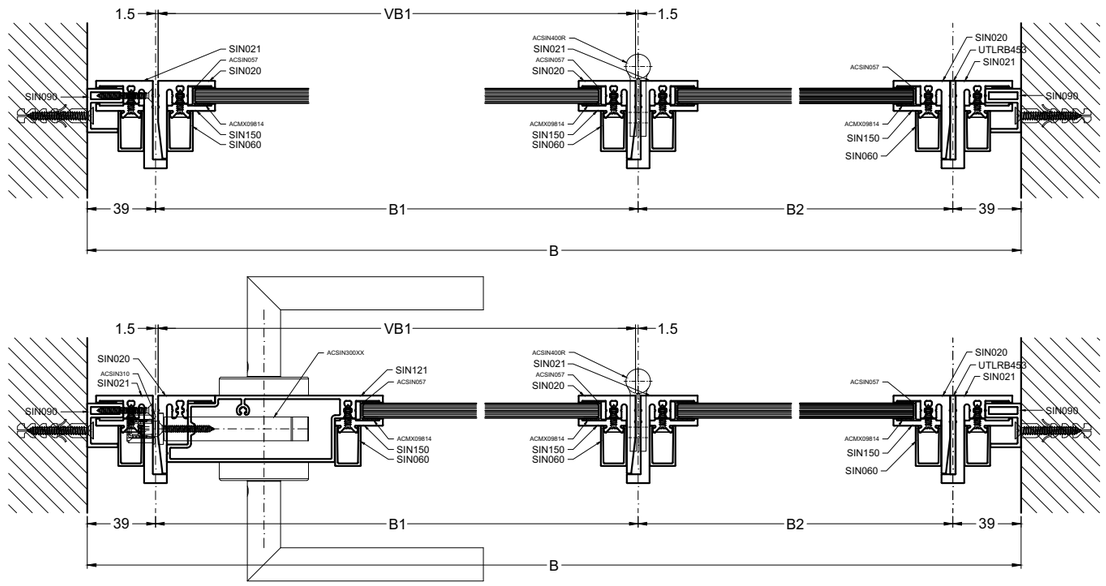


SCHARNIER002A_SLOT

# SCHARNIER002A_N_SLOT

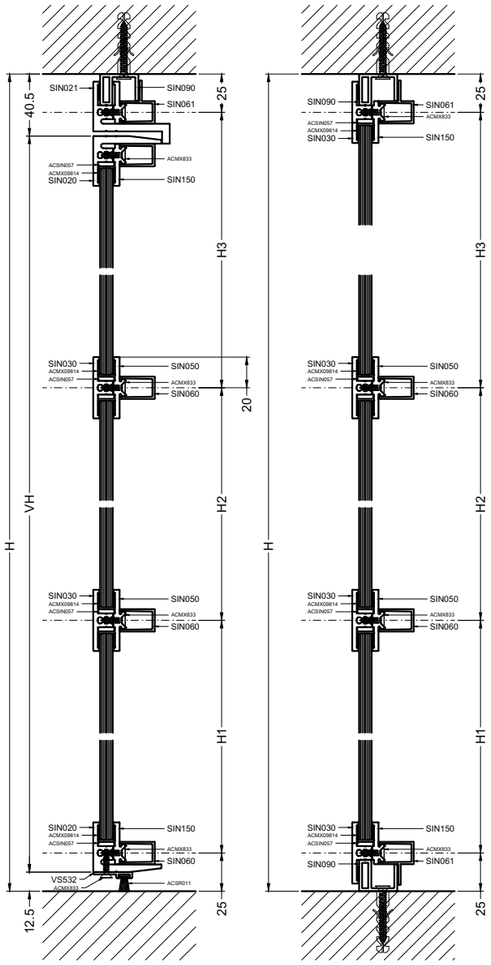


VAST ONDERDEEL
PARTIE FIXE
FESTER TEIL
FIXED PART

| | | | | |
|---|---|---|---|---|
| SIN090 | | 2 | | H |
| | | 1 | | B-35 |
| | | 1 | | B2+1 |
| SIN021 | | 2 | | H-5 |
| | | 1 | | B1+3 |
| SIN030 | | 1 | | H-10 |
| | | 4 | | B2-23 |
| SIN150 | | 2 | | H-35 |
| | | 1 | | B1+3 |
| | | 2 | | B2-26.5 |
| SIN050 | | 2 | | B2-26.5 |
| SIN150 | | 1 | | H1-40 |
| | | 1 | | H2-40 |
| | | 1 | | H3-40 |
| SIN061 | | 1 | | H-35 |
| | | 1 | | H-8.4 |
| | | 1 | | B1+3 |
| | | 1 | | B2-14.3 |
| | | 1 | | B2-14.3 |
| SIN060 | | 2 | | B2-13.8 |
| | | 2 | | H1-14.6 |
| | | 2 | | H2-14.6 |
| | | 2 | | H3-14.6 |

VLEUGEL
OUVRANT
FLUGEL
VENT

| | | | | |
|---|---|---|---|---|
| SIN020 | | 2 | | VH |
| | | 2 | | VB-10 |
| SIN030 | | 2 | | VB-34 |
| SIN050 | | 2 | | VB-10 |
| SIN060 | | 2 | | VB-10 |
| SIN150 | | 2 | | VB-10 |
| | | 2 | | H1-40 |
| | | 2 | | H2-40 |
| | | 2 | | H3-68 |
| SIN060 | | 2 | | VB-10 |
| | | 2 | | H1-14.6 |
| | | 2 | | H2-14.6 |
| | | 2 | | H3-42.6 |
| SIN121 | | 1 | | H2-15 |
| VS532 (*) | | 1 | | VB |

| | |
|---|---|
| ACSIN057 | 38 |
| ACSIN030 | 1 |
| ACSIN400R(L) | 4 |
| ACMX09814 | 6H+H2+7B+B2 |
| ACMX09814 OF / OU / OGEE / JIB ACMX09816 | 4H+6B |
| ACSR011 (*) | VB |

OVERZICHT SLOTEN, ZIE WERKTEKENINGEN
APERCU SERRURES, VOIR LES DESSINS DE CONSTOUCTION
UEBERSICHT SCHLOESSER, SIEHE KONSTRUKTIONZEICHNUNGEN
OVERVIEW LOCKS, SEE CONSTRUCTION DRAWINGS

(*) OPTIONEEL
EN OPTION
FAKULTATIV
OPTIONAL

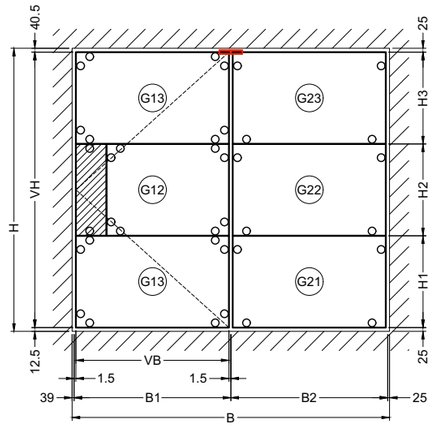


VAST ONDERDEEL
PARTIE FIXE
FESTER TEIL
FIXED PART

| | |
|---|---|
| G31 | H1-17<br>B2-31 |
| G32 | H2-17<br>B2-31 |
| G33 | H3-17<br>B2-31 |

VLEUGEL
OUVRANT
FLUGEL
VENT

| | |
|---|---|
| G21 | H1-17<br>VB-42 |
| G22 | H2-17<br>VB-138 |
| G23 | H3-45<br>VB-42 |

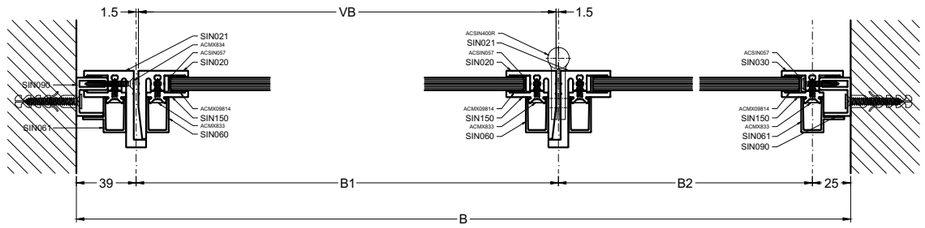


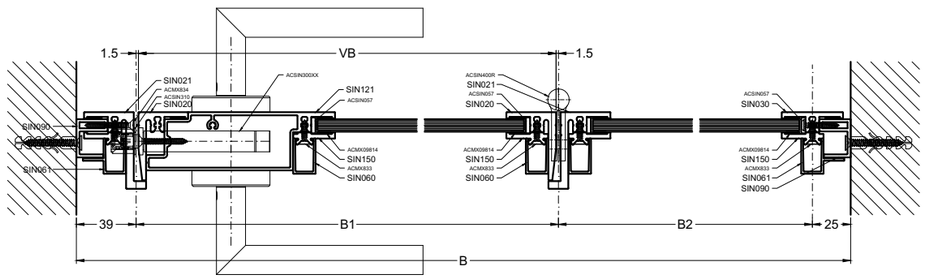


| | | |
|---|---|---|
| VB | VLEUGELBREEDTE<br>LARGEUR VANTAIL<br>BREITE FLUGEL<br>WIDTH SASH | B1-3 |
| VH | VLEUGELHOOGTE<br>HAUTEUR D'OUVRANT<br>FLUGEL HOHE<br>VENT HEIGHT | H-53 |

SCHARNIER002A_N_SLOT

aliplast member of CORIALIS

# SCHARNIER002A2_SLOT

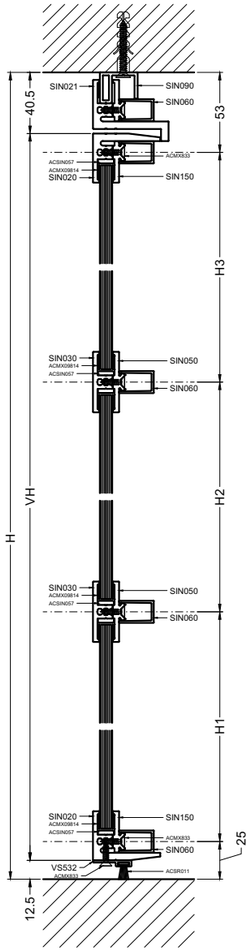


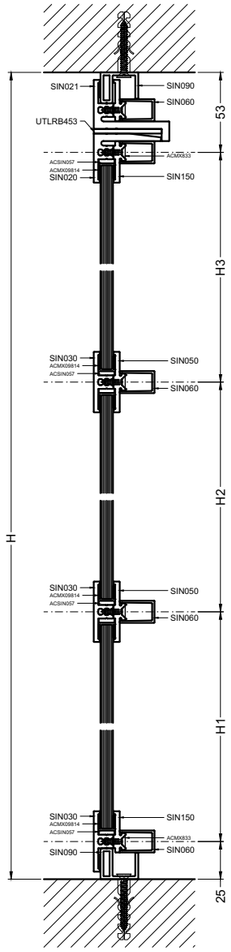


VAST ONDERDEEL
PARTIE FIXE
FESTER TEIL
FIXED PART

| | | | | |
|---|---|---|---|---|
| SIN090 | | 2 | | H |
| | | 1 | | B-35 |
| SIN021 | | 2 | | H-5 |
| | | 1 | | B-75 |
| SIN150 | | 2 | | H-5 |
| | | 1 | | B-64.6 |
| SIN060 | | 2 | | H-17.7 |
| | | 1 | | B-64.6 |
| SIN021 | | 1 | | H-37.5 |
| UTLRB453 | | 1 | | H-37.5 |
| | | 1 | | B3-35.5 |
| SIN020 | | 1 | | H-40.5 |
| | | 1 | | B3-13 |
| SIN090 | | 1 | | B3-13 |
| SIN030 | | 3 | | B3-37 |
| SIN050 | | 2 | | B3-13 |
| SIN060 | | 2 | | B3-13 |
| SIN150 | | 2 | | B3-13 |
| | | 2 | | H1-40 |
| | | 2 | | H2-40 |
| | | 2 | | H3-40 |
| SIN060 | | 2 | | B3-13 |
| | | 2 | | H1-14.6 |
| | | 2 | | H2-14.6 |
| | | 2 | | H3-14.6 |

PRIMAIRE VLEUGEL
PREMIERE VANTAIL
GANGFLEUGEL
FIRST VENT

| | | | | |
|---|---|---|---|---|
| SIN020 | | 2 | | VH |
| | | 2 | | VB2-10 |
| SIN030 | | 2 | | VB2-34 |
| SIN050 | | 2 | | VB2-10 |
| SIN060 | | 2 | | VB2-10 |
| SIN150 | | 2 | | VB2-10 |
| | | 2 | | H1-40 |
| | | 2 | | H2-40 |
| | | 2 | | H3-40 |
| SIN060 | | 2 | | VB2-10 |
| | | 2 | | H1-14.6 |
| | | 2 | | H2-14.6 |
| | | 2 | | H3-14.6 |
| SIN121 | | 1 | | H2-15 |
| VS532 (*) | | 1 | | VB2 |

SECUNDAIRE VLEUGEL
DEUXIEME VANTAIL
STANDFLEUGEL
SECOND VENT

| | | | | |
|---|---|---|---|---|
| SIN020 | | 1 | | VH |
| | | 2 | | VB1-10 |
| SIN021 | | 1 | | VH |
| SIN030 | | 2 | | VB1-34 |
| SIN050 | | 2 | | VB1-10 |
| SIN060 | | 2 | | VB1-10 |
| SIN150 | | 2 | | VB1-37.5 |
| | | 1 | | H1-40 |
| | | 1 | | H1-12.5 |
| | | 2 | | H2-40 |
| | | 1 | | H3-40 |
| | | 1 | | H3-12.5 |
| SIN060 | | 2 | | VB1-24.8 |
| | | 1 | | H1-14.6 |
| | | 1 | | H1-139.8 |
| | | 2 | | H2-14.6 |
| | | 1 | | H3-14.6 |
| | | 1 | | H3-139.8 |
| SIN121 | | 1 | | H2-15 |
| VS532 (*) | | 1 | | VB1 |

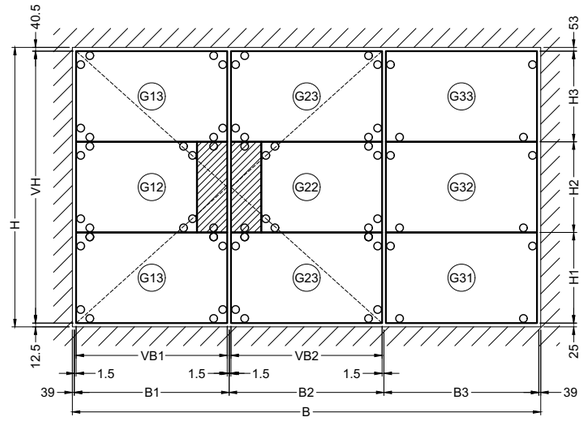


VAST ONDERDEEL
PARTIE FIXE
FESTER TEIL
FIXED PART

| | |
|---|---|
| G31 | H1-17<br>B3-45 |
| G32 | H2-17<br>B3-45 |
| G33 | H3-17<br>B3-45 |

PRIMAIRE VLEUGEL
PREMIERE VANTAIL
GANGFLEUGEL
FIRST VENT

| | |
|---|---|
| G21 | H1-17<br>VB2-42 |
| G22 | H2-17<br>VB2-138 |
| G23 | H3-17<br>VB2-42 |

SECUNDAIRE VLEUGEL
DEUXIEME VANTAIL
STANDFLEUGEL
SECOND VENT

| | |
|---|---|
| G11 | H1-17<br>VB1-42 |
| G12 | H2-17<br>VB1-138 |
| G13 | H3-17<br>VB1-42 |

OVERZICHT SLOTEN, ZIE WERKTEKENINGEN
APERCU SERRURES, VOIR LES DESSINS DE CONSTOUCTION
UEBERSICHT SCHLOESSER, SIEHE KONSTRUKTIONZEICHNUNGEN
OVERVIEW LOCKS, SEE CONSTRUCTION DRAWINGS

| | |
|---|---|
| ACSIN057 | 68 |
| ACSIN400R | 4 |
| ACSIN400L | 4 |
| ACMX09814 | 8H+2H2+7B |
| ACMX09814<br>ACMX09816 | 6H+6B |
| ACSR011 (*) | VB1+VB2 |
| ACSIN330 | 2 |
| ACSIN331 | 1 |
| ACSIN340 | 2 |

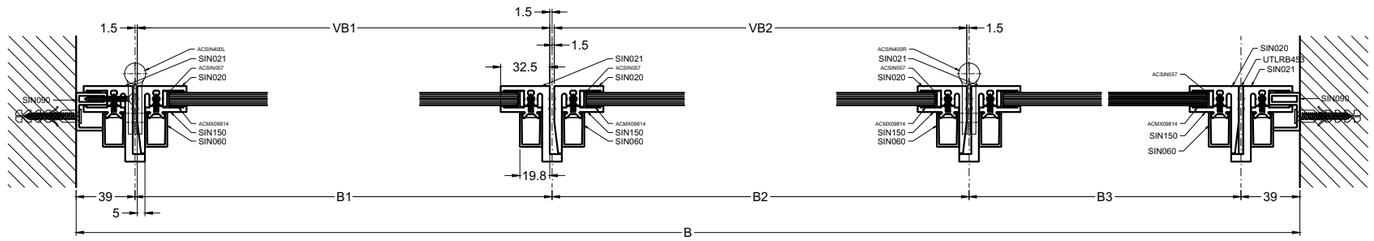


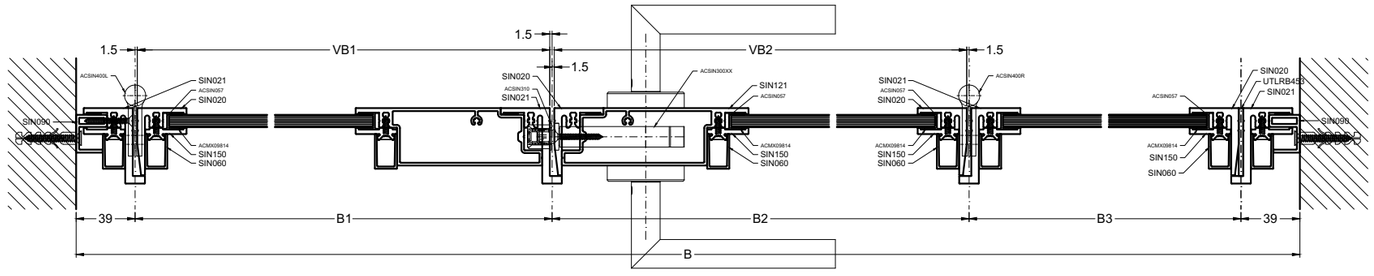


| | | |
|---|---|---|
| VB1<br>VB2 | VLEUGELBREEDTE<br>LARGEUR VANTAIL<br>BREITE FLUGEL<br>WIDTH SASH | B1-3<br>B2-3 |
| VH | VLEUGELHOOGTE<br>HAUTEUR D'OUVRANT<br>FLUGEL HOHE<br>VENT HEIGHT | H-53 |

| | |
|---|---|
| (*) | OPTIONEEL<br>EN OPTION<br>FAKULTATIV<br>OPTIONAL |

SCHARNIER002A2_SLOT

# SCHARNIER002B_SLOT

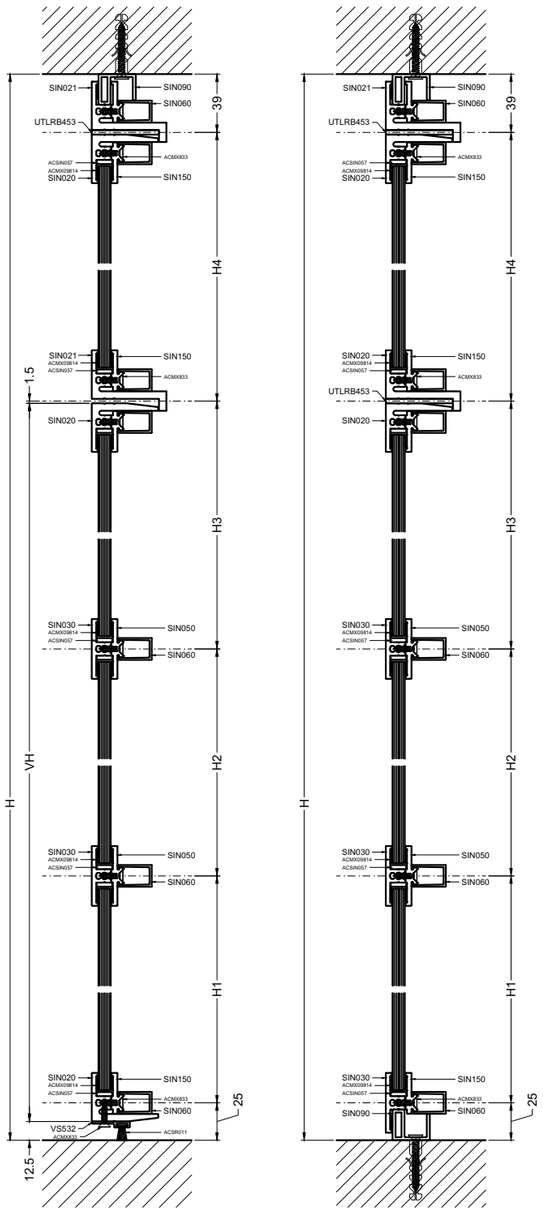


VAST ONDERDEEL
PARTIE FIXE
FESTER TEIL
FIXED PART

| | | | | |
|---|---|---|---|---|
| SIN090 | | 2 | | H |
| | | 1 | | B-35 |
| SIN021 | | 2 | | H-5 |
| | | 1 | | B-75 |
| SIN150 | | 2 | | H-5 |
| | | 1 | | B-64.6 |
| SIN060 | | 2 | | H-17.7 |
| | | 1 | | B-64.6 |
| SIN021 | | 1 | | H-37.5 |
| | | 1 | | B1-5 |
| | | 1 | | B2+3 |
| UTLRB453 | | 3 | | H4-32.5 |
| | | 1 | | H1+H2+H3+26.5 |
| | | 2 | | B1-35.5 |
| | | 1 | | B2-3 |
| SIN020 | | 3 | | H4-8 |
| | | 1 | | H1+H2+H3+23.5 |
| | | 2 | | B1-13 |
| | | 1 | | B2-13 |
| SIN090 | | 1 | | B1-13 |
| SIN030 | | 3 | | B1-37 |

| | | | | |
|---|---|---|---|---|
| SIN050 | | 2 | | B1-13 |
| SIN060 | | 2 | | B1-13 |
| SIN150 | | 4 | | B1-13 |
| | | 2 | | B2-13 |
| | | 4 | | H1-40 |
| | | 4 | | H2-40 |
| | | 4 | | H3-54 |
| | | 4 | | H4-68 |
| SIN060 | | 4 | | B1-13 |
| | | 2 | | B2-13 |
| | | 4 | | H1-14.6 |
| | | 4 | | H2-14.6 |
| | | 4 | | H3-28.6 |
| | | 4 | | H4-42.6 |

OVERZICHT SLOTEN, ZIE WERKTEKENINGEN
APERCU SERRURES, VOIR LES DESSINS DE CONSTOUCTION
UEBERSICHT SCHLOESSER, SIEHE KONSTRUKTIONZEICHNUNGEN
OVERVIEW LOCKS, SEE CONSTRUCTION DRAWINGS

(*) OPTIONEEL
EN OPTION
FAKULTATIV
OPTIONAL

VLEUGEL
OUVRANT
FLUGEL
VENT

| | | | | |
|---|---|---|---|---|
| SIN020 | | 2 | | VH |
| | | 2 | | VB2-10 |
| SIN030 | | 2 | | VB2-34 |
| SIN050 | | 2 | | VB2-10 |
| SIN060 | | 2 | | VB2-10 |
| SIN150 | | 2 | | VB2-10 |
| | | 2 | | H1-40 |
| | | 2 | | H2-40 |
| | | 2 | | H3-40 |
| SIN060 | | 2 | | VB2-10 |
| | | 2 | | H1-14.6 |
| | | 2 | | H2-14.6 |
| | | 2 | | H3-14.6 |
| SIN121 | | 1 | | H2-15 |
| VS532 (*) | | 1 | | VB2 |

| | |
|---|---|
| ACSIN057 | 48 |
| ACSIN030 | 1 |
| ACSIN400R(L) | 4 |
| ACMX09814 | 6H+H2+9B+B1 |
| ACMX09814 (OF 1X2 / 1500X1120) ACMX09816 | 6H+8B |
| ACSR011 (*) | VB2 |

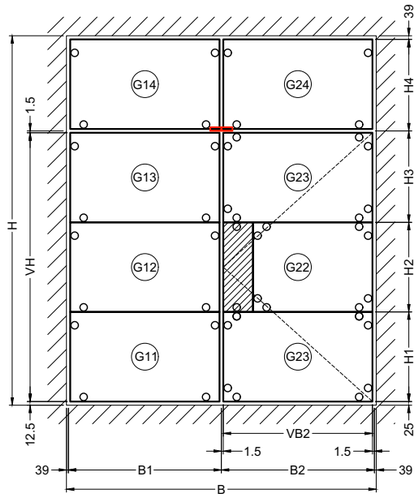


| | | |
|---|---|---|
| VB2 | VLEUGELBREEDTE<br>LARGEUR VANTAIL<br>BREITE FLUGEL<br>WIDTH SASH | B2-3 |
| VH | VLEUGELHOOGTE<br>HAUTEUR D'OUVRANT<br>FLUGEL HOHE<br>VENT HEIGHT | H1+H2+H3+11 |

VAST ONDERDEEL
PARTIE FIXE
FESTER TEIL
FIXED PART

| | |
|---|---|
| G11 | H1-17<br>B1-45 |
| G12 | H2-17<br>B1-45 |
| G13 | H3-31<br>B1-45 |
| G14 | H4-45<br>B1-45 |
| G24 | H4-45<br>B2-45 |

VLEUGEL
OUVRANT
FLUGEL
VENT

| | |
|---|---|
| G21 | H1-17<br>VB2-42 |
| G22 | H2-17<br>VB2-138 |
| G23 | H3-31<br>VB2-42 |

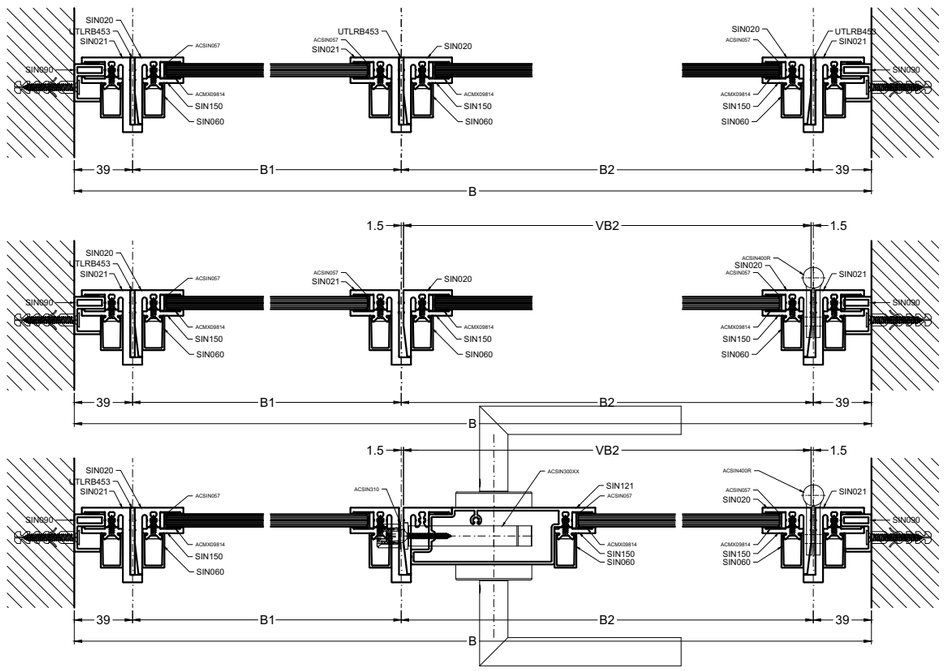


SCHARNIER002B_SLOT

# SCHARNIER003A_SLOT

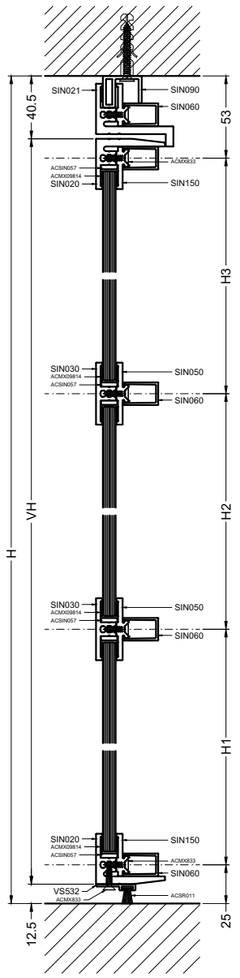


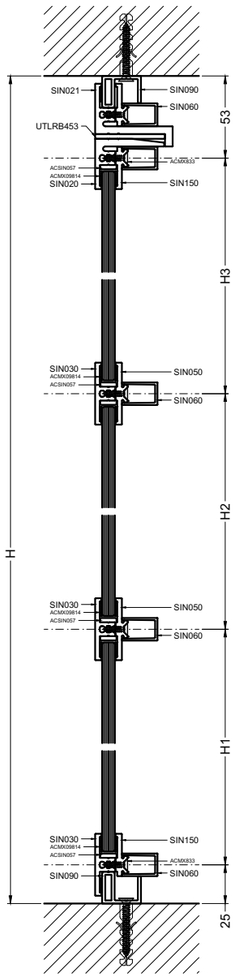


VAST ONDERDEEL
PARTIE FIXE
FESTER TEIL
FIXED PART

| | | | | |
|---|---|---|---|---|
| SIN090 | | 2 | | H |
| | | 1 | | B-35 |
| SIN021 | | 2 | | H-5 |
| | | 1 | | B-75 |
| SIN150 | | 2 | | H-5 |
| | | 1 | | B-64.6 |
| SIN060 | | 2 | | H-17.7 |
| | | 1 | | B-64.6 |
| SIN021 | | 2 | | H-37.5 |
| UTLRB453 | | 2 | | H-37.5 |
| | | 1 | | B1-35.5 |
| | | 1 | | B3-35.5 |
| SIN020 | | 2 | | H-40.5 |
| | | 1 | | B1-13 |
| | | 1 | | B3-13 |
| SIN090 | | 1 | | B1-13 |
| | | 1 | | B3-13 |
| SIN030 | | 3 | | B1-37 |
| | | 3 | | B3-37 |
| SIN050 | | 2 | | B1-13 |
| | | 2 | | B3-13 |
| SIN060 | | 2 | | B1-13 |
| | | 2 | | B3-13 |
| SIN150 | | 2 | | B1-13 |
| | | 2 | | B3-13 |
| | | 2 | | H1-40 |
| | | 2 | | H2-40 |
| | | 2 | | H3-40 |
| SIN060 | | 2 | | B1-13 |
| | | 2 | | B3-13 |
| | | 2 | | H1-14.6 |
| | | 2 | | H2-14.6 |
| | | 2 | | H3-14.6 |

VLEUGEL
OUVRANT
FLUGEL
VENT

| | | | | |
|---|---|---|---|---|
| SIN020 | | 2 | | VH |
| | | 2 | | VB2-10 |
| SIN030 | | 2 | | VB2-34 |
| SIN050 | | 2 | | VB2-10 |
| SIN060 | | 2 | | VB2-10 |
| SIN150 | | 2 | | VB2-10 |
| | | 2 | | H1-40 |
| | | 2 | | H2-40 |
| | | 2 | | H3-40 |
| SIN060 | | 2 | | VB2-10 |
| | | 2 | | H1-14.6 |
| | | 2 | | H2-14.6 |
| | | 2 | | H3-14.6 |
| SIN121 | | 1 | | H2-15 |
| VS532 (*) | | 1 | | VB2 |

| | |
|---|---|
| ACSIN057 | 52 |
| ACSIN400R(L) | 4 |
| ACMX09814 | 8H+H2+7B+B1+B2 |
| ACMX09814 OF / OU / ODEO / DE ACMX09816 | 6H+6B |
| ACSR011 (*) | VB2 |

OVERZICHT SLOTEN, ZIE WERKTEKENINGEN
APERCU SERRURES, VOIR LES DESSINS DE CONSTOUCTION
UEBERSICHT SCHLOESSER, SIEHE KONSTRUKTIONZEICHNUNGEN
OVERVIEW LOCKS, SEE CONSTRUCTION DRAWINGS

(*) OPTIONEEL
EN OPTION
FAKULTATIV
OPTIONAL

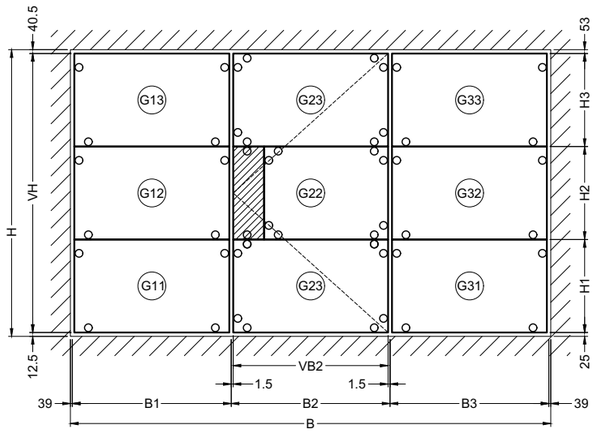


VAST ONDERDEEL
PARTIE FIXE
FESTER TEIL
FIXED PART

| | | | |
|---|---|---|---|
| G11 | H1-17<br>B1-45 | G31 | H1-17<br>B3-45 |
| G12 | H2-17<br>B1-45 | G32 | H2-17<br>B3-45 |
| G13 | H3-17<br>B1-45 | G33 | H3-17<br>B3-45 |

VLEUGEL
OUVRANT
FLUGEL
VENT

| | |
|---|---|
| G21 | H1-17<br>VB2-42 |
| G22 | H2-17<br>VB2-138 |
| G23 | H3-17<br>VB2-42 |

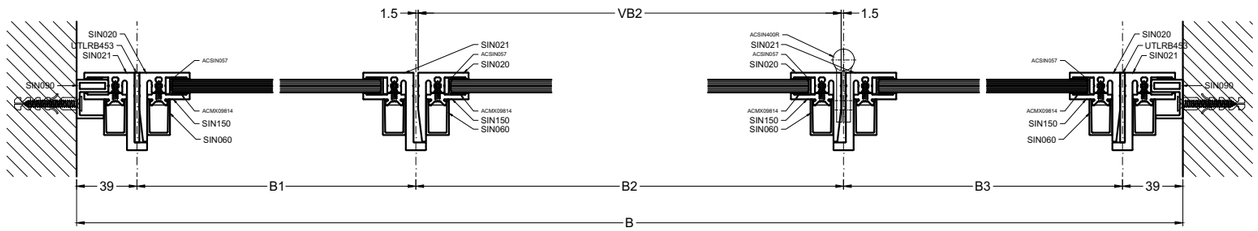


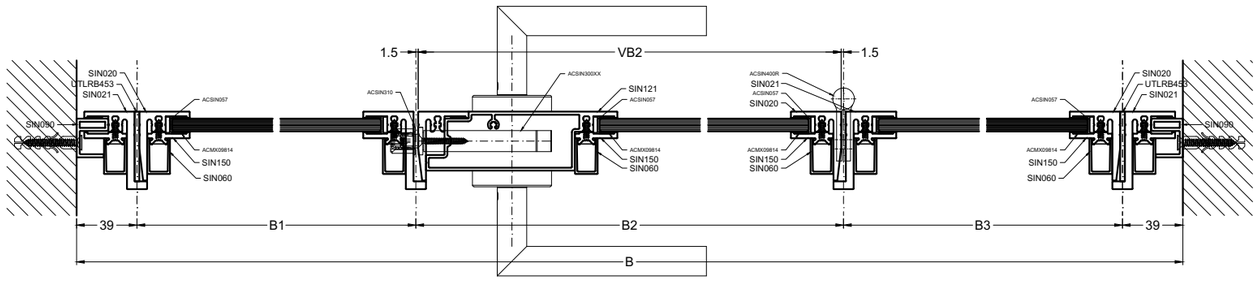


| | | |
|---|---|---|
| VB2 | VLEUGELBREEDTE<br>LARGEUR VANTAIL<br>BREITE FLUGEL<br>WIDTH SASH | B1-3 |
| VH | VLEUGELHOOGTE<br>HAUTEUR D'OUVRANT<br>FLUGEL HOHE<br>VENT HEIGHT | H-53 |

# SCHARNIER003A_N_SLOT

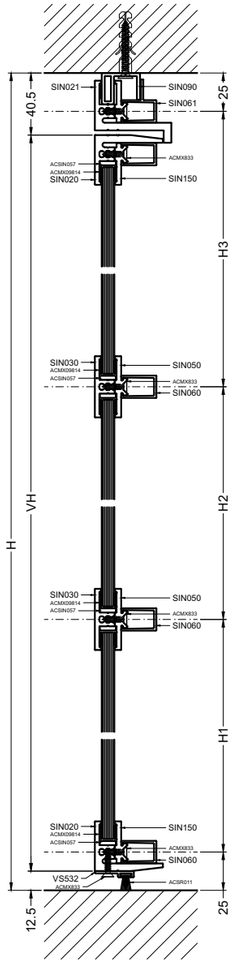


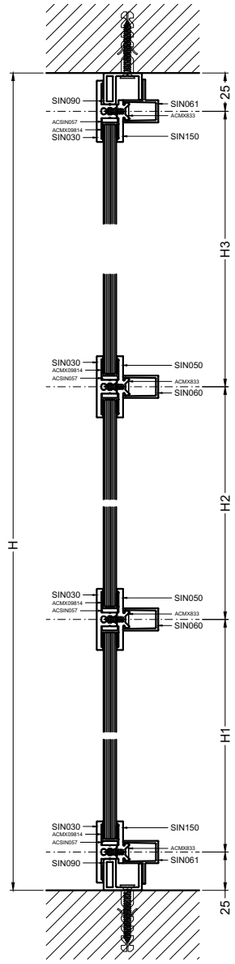


VAST ONDERDEEL
PARTIE FIXE
FESTER TEIL
FIXED PART

| | | | | |
|---|---|---|---|---|
| SIN090 | | 2 | | H |
| | | 1 | | B-35 |
| | | 1 | | B1+1 |
| | | 1 | | B3+1 |
| SIN021 | | 2 | | H-5 |
| | | 1 | | B2+3 |
| SIN030 | | 2 | | H-10 |
| | | 4 | | B1-23 |
| | | 4 | | B3-23 |
| SIN150 | | 2 | | H-35 |
| | | 2 | | B1-26.5 |
| | | 1 | | B2+3 |
| | | 2 | | B3-26.5 |
| SIN050 | | 2 | | B1-26.5 |
| | | 2 | | B3-26.5 |
| SIN150 | | 2 | | H1-40 |
| | | 2 | | H2-40 |
| | | 2 | | H3-40 |
| SIN061 | | 2 | | H-8.4 |
| | | 1 | | B1-14.3 |
| | | 1 | | B1-14.3 |
| | | 1 | | B2+3 |
| | | 1 | | B3-14.3 |
| | | 1 | | B3-14.3 |
| SIN060 | | 2 | | B1-13.8 |
| | | 2 | | B3-13.8 |
| | | 2 | | H1-14.6 |
| | | 2 | | H2-14.6 |
| | | 2 | | H3-14.6 |
| SIN121 (*) | | 1 | | H2-15 |

VLEUGEL
OUVRANT
FLUGEL
VENT

| | | | | |
|---|---|---|---|---|
| SIN020 | | 2 | | VH |
| | | 2 | | VB-10 |
| SIN030 | | 2 | | VB-34 |
| SIN050 | | 2 | | VB-10 |
| SIN060 | | 2 | | VB-10 |
| SIN150 | | 2 | | VB-10 |
| | | 2 | | H1-40 |
| | | 2 | | H2-40 |
| | | 2 | | H3-68 |
| SIN060 | | 2 | | VB-10 |
| | | 2 | | H1-14.6 |
| | | 2 | | H2-14.6 |
| | | 2 | | H3-42.6 |
| SIN121 | | 1 | | H2-15 |
| VS532 (*) | | 1 | | VB |

| | |
|---|---|
| ACSIN057 | 54 |
| ACSIN030 | 2 |
| ACSIN400R(L) | 4 |
| ACMX09814 | 8H+H2+7B+B1+B2 |
| ACMX09814 OF / OU / 0008 / 0R ACMX09816 | 6H+6B |
| ACSR011 (*) | VB |

OVERZICHT SLOTEN, ZIE WERKTEKENINGEN
APERCU SERRURES, VOIR LES DESSINS DE CONSTOUCTION
UEBERSICHT SCHLOESSER, SIEHE KONSTRUKTIONZEICHNUNGEN
OVERVIEW LOCKS, SEE CONSTRUCTION DRAWINGS

(*) OPTIONEEL
EN OPTION
FAKULTATIV
OPTIONAL

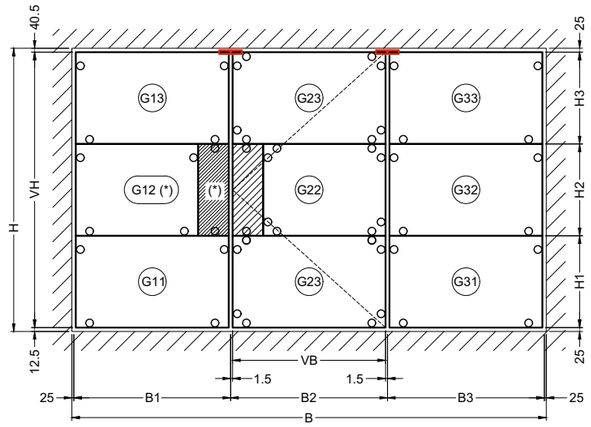


VAST ONDERDEEL
PARTIE FIXE
FESTER TEIL
FIXED PART

| | | | |
|---|---|---|---|
| G11 | H1-17<br>B1-31 | SIN121 (*) | |
| G12 (*) | H2-17<br>B1-31 | H2-17<br>B1-127 | |
| G13 | H3-17<br>B1-31 | | |

| | |
|---|---|
| G31 | H1-17<br>B3-31 |
| G32 | H2-17<br>B3-31 |
| G33 | H3-17<br>B3-31 |

VLEUGEL
OUVRANT
FLUGEL
VENT

| | |
|---|---|
| G21 | H1-17<br>VB-42 |
| G22 | H2-17<br>VB-138 |
| G23 | H3-45<br>VB-42 |

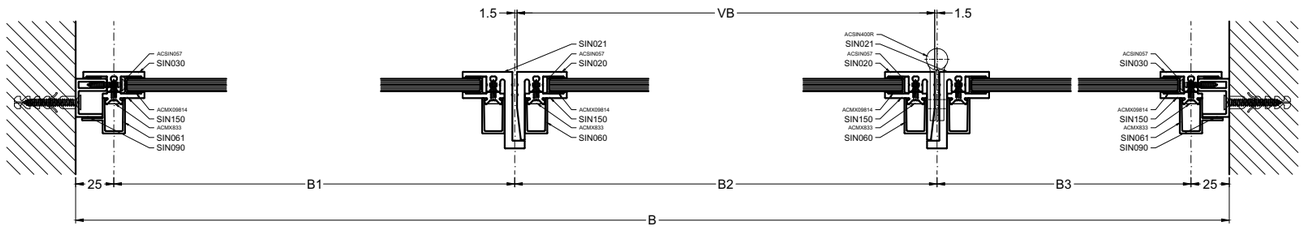


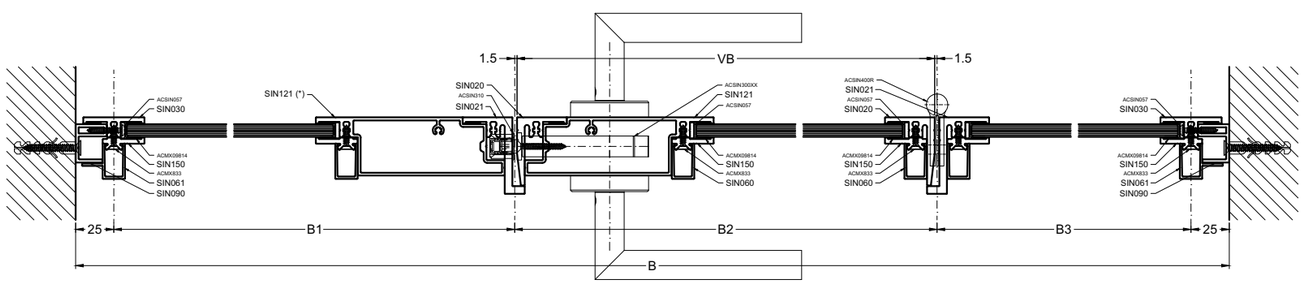


| | | |
|---|---|---|
| VB | VLEUGELBREEDTE<br>LARGEUR VANTAIL<br>BREITE FLUGEL<br>WIDTH SASH | B2-3 |
| VH | VLEUGELHOOGTE<br>HAUTEUR D'OUVRANT<br>FLUGEL HOHE<br>VENT HEIGHT | H-53 |

SCHARNIER003A_N_SLOT

aliplast member of CORIALIS

ZAAGTABELLEN-COUPES ET DEBITS-ZUSCHNITTSTABELLEN-FABRICATION CHARTS

# SCHARNIER003A2_SLOT

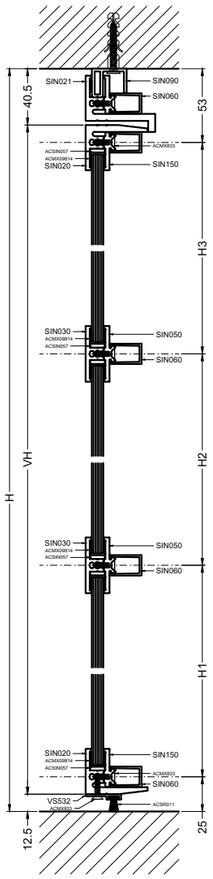


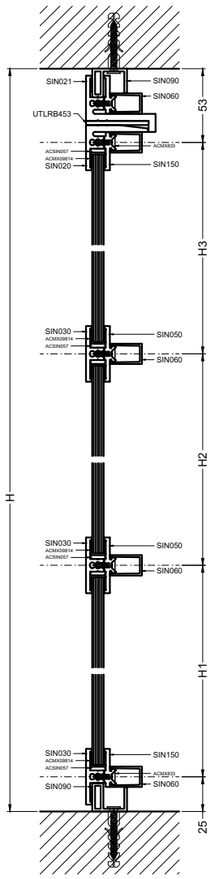


VAST ONDERDEEL
PARTIE FIXE
FESTER TEIL
FIXED PART

| | | | | |
|---|---|---|---|---|
| SIN090 | | 2 | | H |
| | | 1 | | B-35 |
| SIN021 | | 2 | | H-5 |
| | | 1 | | B-75 |
| SIN150 | | 2 | | H-5 |
| | | 1 | | B-64.6 |
| SIN060 | | 2 | | H-17.7 |
| | | 1 | | B-64.6 |
| SIN021 | | 2 | | H-37.5 |
| UTLRB453 | | 2 | | H-37.5 |
| | | 1 | | B1-35.5 |
| | | 1 | | B4-35.5 |
| SIN020 | | 2 | | H-40.5 |
| | | 1 | | B1-13 |
| | | 1 | | B4-13 |
| SIN090 | | 1 | | B1-13 |
| | | 1 | | B4-13 |
| SIN030 | | 3 | | B1-37 |
| | | 3 | | B4-37 |
| SIN050 | | 2 | | B1-13 |
| | | 2 | | B4-13 |
| SIN060 | | 2 | | B1-13 |
| | | 2 | | B4-13 |
| SIN150 | | 2 | | B1-13 |
| | | 2 | | B4-13 |
| | | 2 | | H1-40 |
| | | 2 | | H2-40 |
| | | 2 | | H3-40 |
| SIN060 | | 2 | | B1-13 |
| | | 2 | | B4-13 |
| | | 2 | | H1-14.6 |
| | | 2 | | H2-14.6 |
| | | 2 | | H3-14.6 |

PRIMAIRE VLEUGEL
PREMIERE VANTAIL
GANGFLEUGEL
FIRST VENT

| | | | | |
|---|---|---|---|---|
| SIN020 | | 2 | | VH |
| | | 2 | | VB2-10 |
| SIN030 | | 2 | | VB2-34 |
| SIN050 | | 2 | | VB2-10 |
| SIN060 | | 2 | | VB2-10 |
| SIN150 | | 2 | | VB2-10 |
| | | 2 | | H1-40 |
| | | 2 | | H2-40 |
| | | 2 | | H3-40 |
| SIN060 | | 2 | | VB2-10 |
| | | 2 | | H1-14.6 |
| | | 2 | | H2-14.6 |
| | | 2 | | H3-14.6 |
| SIN121 | | 1 | | H2-15 |
| VS532 (*) | | 1 | | VB2 |

SECUNDAIRE VLEUGEL
DEUXIEME VANTAIL
STANDFLEUGEL
SECOND VENT

| | | | | |
|---|---|---|---|---|
| SIN020 | | 1 | | VH |
| | | 2 | | VB1-10 |
| SIN021 | | 1 | | VH |
| SIN030 | | 2 | | VB1-34 |
| SIN050 | | 2 | | VB1-10 |
| SIN060 | | 2 | | VB1-10 |
| SIN150 | | 2 | | VB1-37.5 |
| | | 1 | | H1-40 |
| | | 1 | | H1-12.5 |
| | | 2 | | H2-40 |
| | | 1 | | H3-40 |
| | | 1 | | H3-122.5 |
| SIN060 | | 2 | | VB1-24.8 |
| | | 1 | | H1-14.6 |
| | | 1 | | H1-139.8 |
| | | 2 | | H2-14.6 |
| | | 1 | | H3-14.6 |
| | | 1 | | H3-139.8 |
| SIN121 | | 1 | | H2-15 |
| VS532 (*) | | 1 | | VB1 |

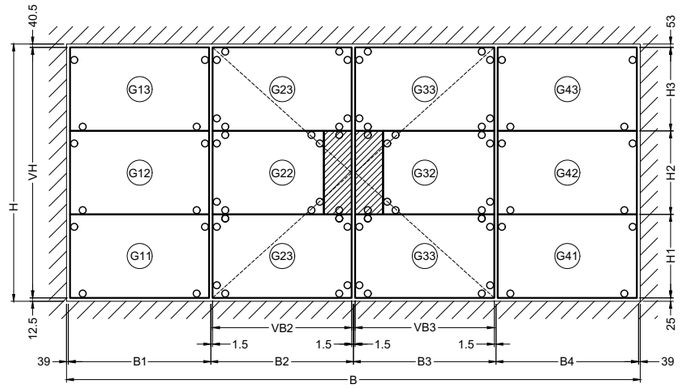


| | |
|---|---|
| ACSIN057 | 80 |
| ACSIN400R | 4 |
| ACSIN400L | 4 |
| ACMX09814 | 10H+2H2+7B |
| ACMX09814<br>ACMX09816 | 8H+6B |
| ACSR011 (*) | VB2+VB3 |
| ACSIN330 | 2 |
| ACSIN331 | 1 |
| ACSIN340 | 2 |

OVERZICHT SLOTEN, ZIE WERKTEKENINGEN
APERCU SERRURES, VOIR LES DESSINS DE CONSTOUCTION
UEBERSICHT SCHLOESSER, SIEHE KONSTRUKTIONZEICHNUNGEN
OVERVIEW LOCKS, SEE CONSTRUCTION DRAWINGS

VAST ONDERDEEL
PARTIE FIXE
FESTER TEIL
FIXED PART

| | |
|---|---|
| G11 | H1-17<br>B1-45 |
| G12 | H2-17<br>B1-45 |
| G13 | H3-17<br>B1-45 |
| G41 | H1-17<br>B4-45 |
| G42 | H2-17<br>B4-45 |
| G43 | H3-17<br>B4-45 |

PRIMAIRE VLEUGEL
PREMIERE VANTAIL
GANGFLEUGEL
FIRST VENT

| | |
|---|---|
| G31 | H1-17<br>VB3-42 |
| G32 | H2-17<br>VB3-138 |
| G33 | H3-17<br>VB3-42 |

SECUNDAIRE VLEUGEL
DEUXIEME VANTAIL
STANDFLEUGEL
SECOND VENT

| | |
|---|---|
| G21 | H1-17<br>VB2-42 |
| G22 | H2-17<br>VB2-138 |
| G23 | H3-17<br>VB2-42 |

| | | |
|---|---|---|
| VB2<br>VB3 | VLEUGELBREEDTE<br>LARGEUR VANTAIL<br>BREITE FLUGEL<br>WIDTH SASH | B2-3<br>B3-3 |
| VH | VLEUGELHOOGTE<br>HAUTEUR D'OUVRANT<br>FLUGEL HOHE<br>VENT HEIGHT | H-53 |

(*) OPTIONEEL
EN OPTION
FAKULTATIV
OPTIONAL

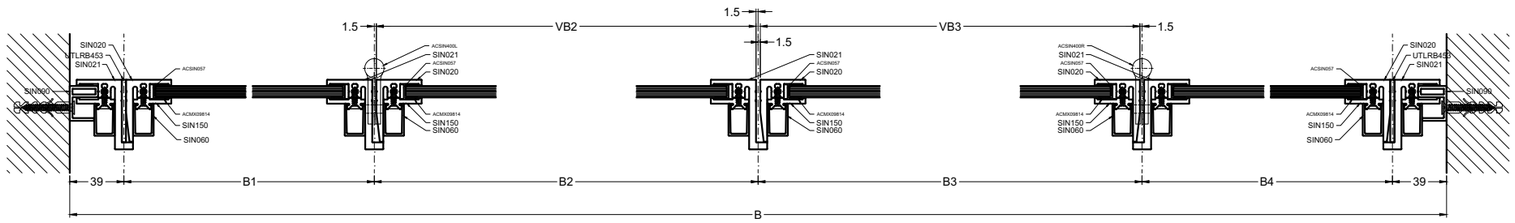


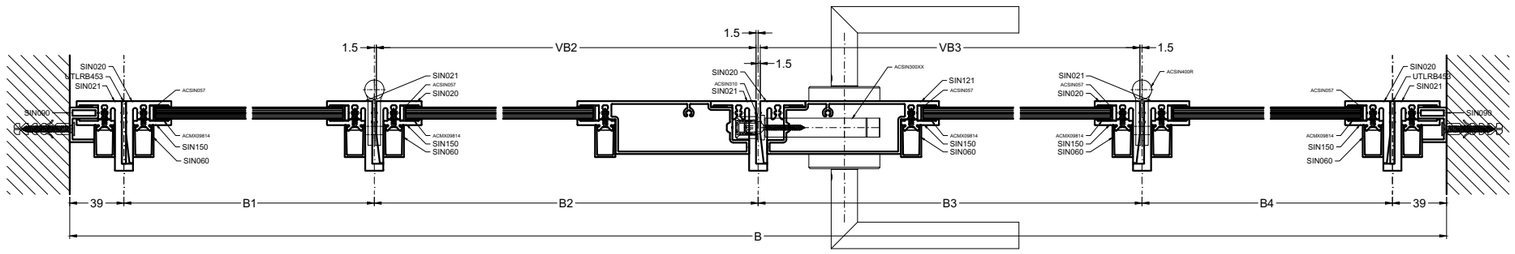


SCHARNIER003A2_SLOT

# SCHARNIER003B_SLOT

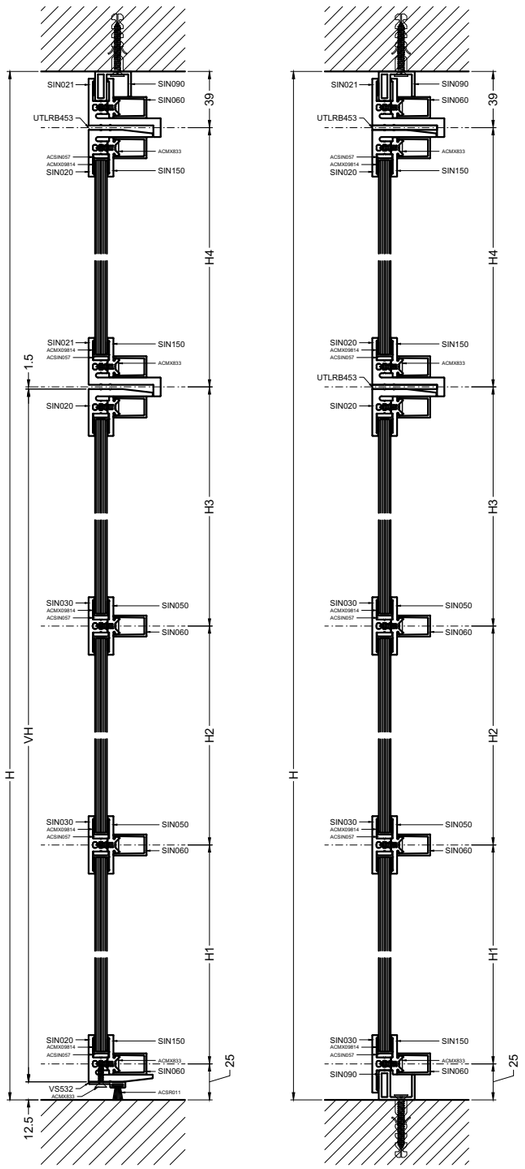


VAST ONDERDEEL
PARTIE FIXE
FESTER TEIL
FIXED PART

| | | | | |
|---|---|---|---|---|
| SIN090 | | 2 | | H |
| | | 1 | | B-35 |
| SIN021 | | 2 | | H-5 |
| | | 1 | | B-75 |
| SIN150 | | 2 | | H-5 |
| | | 1 | | B-64.6 |
| SIN060 | | 2 | | H-17.7 |
| | | 1 | | B-64.6 |
| SIN021 | | 2 | | H-37.5 |
| | | 1 | | B1-5 |
| | | 1 | | B2+3 |
| | | 1 | | B3-5 |
| UTLRB453 | | 4 | | H4-32.5 |
| | | 2 | | H1+H2+H3+26.5 |
| | | 2 | | B1-35.5 |
| | | 1 | | B2-3 |
| | | 2 | | B3-35.5 |
| SIN020 | | 4 | | H4-8 |
| | | 2 | | H1+H2+H3+23.5 |
| | | 2 | | B1-13 |
| | | 1 | | B2-13 |
| | | 2 | | B3-13 |
| SIN090 | | 1 | | B1-13 |
| | | 1 | | B3-13 |
| SIN030 | | 3 | | B1-37 |
| | | 3 | | B3-37 |

| | | | | |
|---|---|---|---|---|
| SIN050 | | 2 | | B1-13 |
| | | 2 | | B3-13 |
| SIN060 | | 2 | | B1-13 |
| | | 2 | | B3-13 |
| SIN150 | | 4 | | B1-13 |
| | | 2 | | B2-13 |
| | | 4 | | B3-13 |
| | | 4 | | H1-40 |
| | | 4 | | H2-40 |
| | | 4 | | H3-54 |
| | | 6 | | H4-68 |
| SIN060 | | 4 | | B1-13 |
| | | 2 | | B2-13 |
| | | 4 | | B3-13 |
| | | 4 | | H1-14.6 |
| | | 4 | | H2-14.6 |
| | | 4 | | H3-28.6 |
| | | 6 | | H4-42.6 |

OVERZICHT SLOTEN, ZIE WERKTEKENINGEN
APERCU SERRURES, VOIR LES DESSINS DE CONSTOUCTION
UEBERSICHT SCHLOESSER, SIEHE KONSTRUKTIONZEICHNUNGEN
OVERVIEW LOCKS, SEE CONSTRUCTION DRAWINGS

(*) OPTIONEEL
EN OPTION
FAKULTATIV
OPTIONAL

VLEUGEL
OUVRANT
FLUGEL
VENT

| | | | | |
|---|---|---|---|---|
| SIN020 | | 2 | | VH |
| | | 2 | | VB2-10 |
| SIN030 | | 2 | | VB2-34 |
| SIN050 | | 2 | | VB2-10 |
| SIN060 | | 2 | | VB2-10 |
| SIN150 | | 2 | | VB2-10 |
| | | 2 | | H1-40 |
| | | 2 | | H2-40 |
| | | 2 | | H3-40 |
| SIN060 | | 2 | | VB2-10 |
| | | 2 | | H1-14.6 |
| | | 2 | | H2-14.6 |
| | | 2 | | H3-14.6 |
| SIN121 | | 1 | | H2-15 |
| VS532 (*) | | 1 | | VB2 |

| | |
|---|---|
| ACSIN057 | 64 |
| ACSIN030 | 2 |
| ACSIN400R(L) | 4 |
| ACMX09814 | 8H+H2+9B+B1+B3 |
| ACMX09814 OR ACMX09816 | 6H+8B |
| ACSR011 (*) | VB2 |

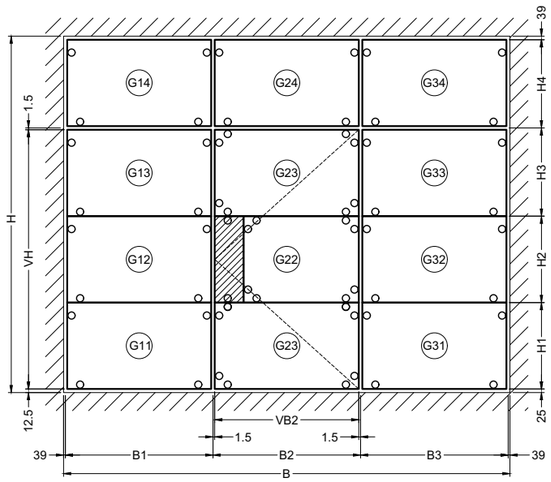


| | | |
|---|---|---|
| VB2 | VLEUGELBREEDTE<br>LARGEUR VANTAIL<br>BREITE FLUGEL<br>WIDTH SASH | B2-3 |
| VH | VLEUGELHOOGTE<br>HAUTEUR D'OUVRANT<br>FLUGEL HOHE<br>VENT HEIGHT | H1+H2+H3-14 |

VAST ONDERDEEL
PARTIE FIXE
FESTER TEIL
FIXED PART

| | |
|---|---|
| G11 | H1-17<br>B1-45 |
| G12 | H2-17<br>B1-45 |
| G13 | H3-31<br>B1-45 |
| G14 | H4-45<br>B1-45 |
| G24 | H4-45<br>B2-45 |
| G31 | H1-17<br>B3-45 |
| G32 | H2-17<br>B3-45 |
| G33 | H3-31<br>B3-45 |
| G34 | H4-45<br>B3-45 |

VLEUGEL
OUVRANT
FLUGEL
VENT

| | |
|---|---|
| G21 | H1-17<br>VB2-42 |
| G22 | H2-17<br>VB2-138 |
| G23 | H3-31<br>VB2-42 |

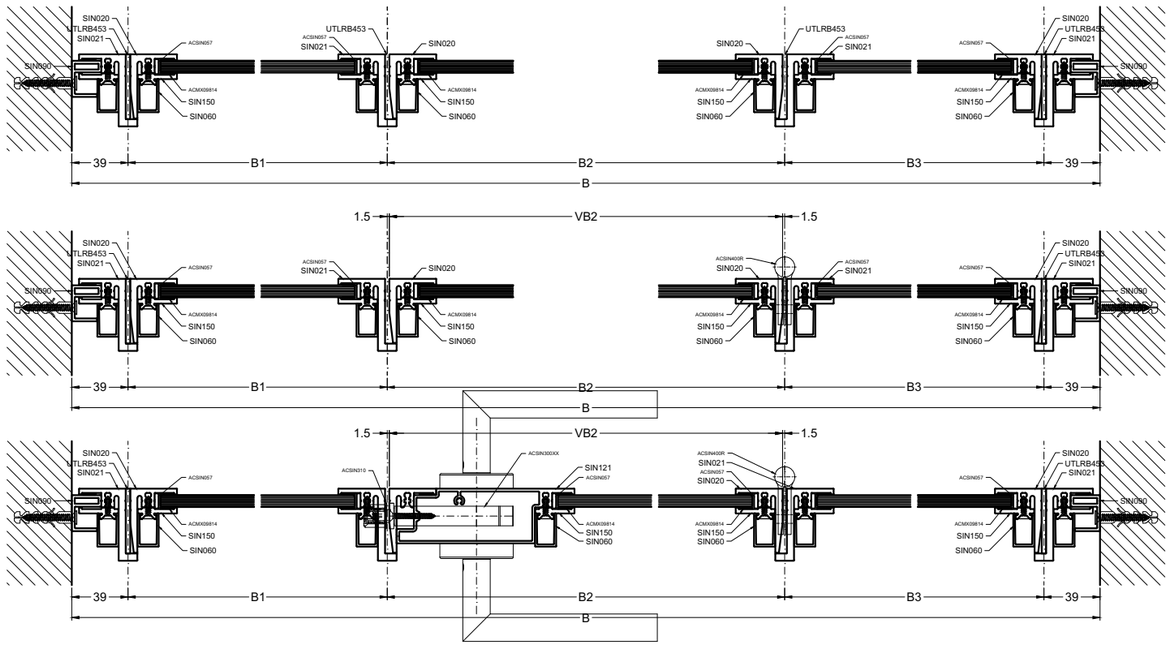


SCHARNIER003B_SLOT

aliplast
member of
CORIALIS

# SCHARNIER003B2_SLOT

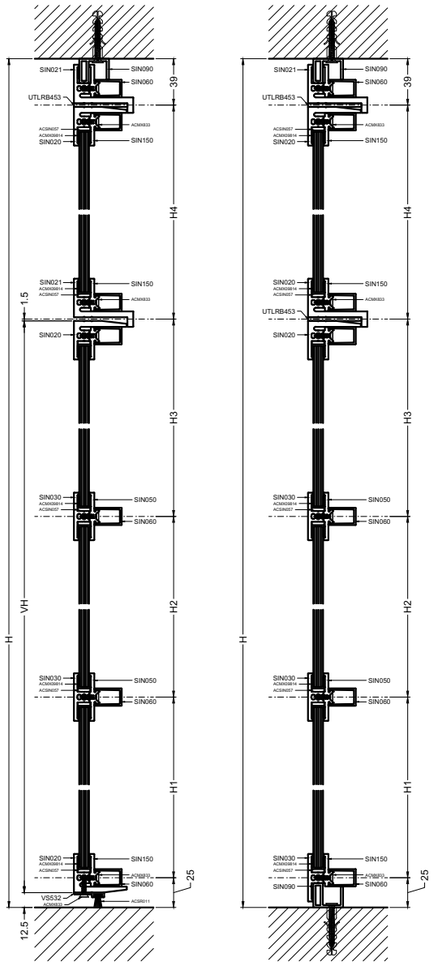


VAST ONDERDEEL
PARTIE FIXE
FESTER TEIL
FIXED PART

| | | | | |
|---|---|---|---|---|
| SIN090 | | 2 | | H |
| | | 1 | | B-35 |
| SIN021 | | 2 | | H-5 |
| | | 1 | | B-75 |
| SIN150 | | 2 | | H-5 |
| | | 1 | | B-64.6 |
| SIN060 | | 2 | | H-17.7 |
| | | 1 | | B-64.6 |
| SIN021 | | 2 | | H-37.5 |
| | | 1 | | B1-5 |
| | | 1 | | B2+B3+3 |
| | | 1 | | B4-5 |
| UTLRB453 | | 4 | | H4-32.5 |
| | | 2 | | H1+H2+H3+26.5 |
| | | 2 | | B1-35.5 |
| | | 1 | | B2+B3-3 |
| | | 2 | | B4-35.5 |
| SIN020 | | 4 | | H4-8 |
| | | 2 | | H1+H2+H3+23.5 |
| | | 2 | | B1-13 |
| | | 1 | | B2+B3-13 |
| | | 2 | | B4-13 |
| SIN090 | | 1 | | B1-13 |
| | | 1 | | B4-13 |
| SIN030 | | 3 | | B1-37 |
| | | 3 | | B4-37 |
| | | 1 | | H4-37 |
| SIN050 | | 2 | | B1-13 |
| | | 2 | | B4-13 |
| | | 1 | | H4-68 |
| SIN060 | | 2 | | B1-13 |
| | | 2 | | B4-13 |
| | | 1 | | H4-42.6 |

| | | | | |
|---|---|---|---|---|
| SIN150 | | 4 | | B1-13 |
| | | 2 | | B2+B3-13 |
| | | 4 | | B4-13 |
| | | 4 | | H1-40 |
| | | 4 | | H2-40 |
| | | 4 | | H3-54 |
| | | 6 | | H4-68 |
| SIN060 | | 4 | | B1-13 |
| | | 2 | | B2+B3-13 |
| | | 4 | | B4-13 |
| | | 4 | | H1-14.6 |
| | | 4 | | H2-14.6 |
| | | 4 | | H3-28.6 |
| | | 6 | | H4-42.6 |

PRIMAIRE VLEUGEL
PREMIERE VANTAIL
GANGFLEUGEL
FIRST VENT

| | | | | |
|---|---|---|---|---|
| SIN020 | | 2 | | VH |
| | | 2 | | VB3-10 |
| SIN030 | | 2 | | VB3-34 |
| SIN050 | | 2 | | VB3-10 |
| SIN060 | | 2 | | VB3-10 |
| SIN150 | | 2 | | VB3-10 |
| | | 2 | | H1-40 |
| | | 2 | | H2-40 |
| | | 2 | | H3-40 |
| SIN060 | | 2 | | VB3-10 |
| | | 2 | | H1-14.6 |
| | | 2 | | H2-14.6 |
| | | 2 | | H3-14.6 |
| SIN121 | | 1 | | H2-15 |
| VS532 (*) | | 1 | | VB3 |

SECUNDAIRE VLEUGEL
DEUXIEME VANTAIL
STANDFLEUGEL
SECOND VENT

| | | | | |
|---|---|---|---|---|
| SIN020 | | 1 | | VH |
| | | 2 | | VB2-10 |
| SIN021 | | 1 | | VH |
| SIN030 | | 2 | | VB2-34 |
| SIN050 | | 2 | | VB2-10 |
| SIN060 | | 2 | | VB2-10 |
| SIN150 | | 2 | | VB2-37.5 |
| | | 1 | | H1-40 |
| | | 1 | | H1-12.5 |
| | | 2 | | H2-40 |
| | | 1 | | H3-40 |
| | | 1 | | H3-122.5 |
| SIN060 | | 2 | | VB2-24.8 |
| | | 1 | | H1-14.6 |
| | | 1 | | H1-139.8 |
| | | 2 | | H2-14.6 |
| | | 1 | | H3-14.6 |
| | | 1 | | H3-139.8 |
| SIN121 | | 1 | | H2-15 |
| VS532 (*) | | 1 | | VB2 |

| | |
|---|---|
| ACSIN057 | 96 |
| ACSIN030 | 2 |
| ACSIN400R | 4 |
| ACSIN400L | 4 |
| ACMX09814 | 10H+2H2+9B+B1+B4 |
| ACMX09814 (*) ACMX09816 | 8H+8B |
| ACSR011 (*) | VB2+VB3 |
| ACSIN330 | 2 |
| ACSIN331 | 1 |
| ACSIN340 | 2 |

OVERZICHT SLOTEN, ZIE WERKTEKENINGEN
APERCU SERRURES, VOIR LES DESSINS DE CONSTOUCTION
UEBERSICHT SCHLOESSER, SIEHE KONSTRUKTIONZEICHNUNGEN
OVERVIEW LOCKS, SEE CONSTRUCTION DRAWINGS

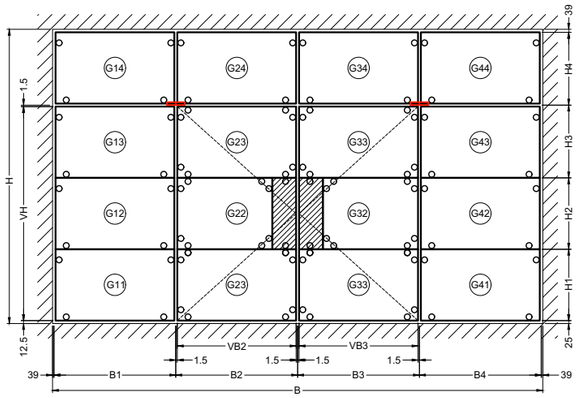


| | | |
|---|---|---|
| VB | VLEUGELBREEDTE<br>LARGEUR VANTAIL<br>BREITE FLUGEL<br>WIDTH SASH | B2-3 |
| VH | VLEUGELHOOGTE<br>HAUTEUR D'OUVRANT<br>FLUGEL HOHE<br>VENT HEIGHT | H1+H2+H3-14 |

VAST ONDERDEEL
PARTIE FIXE
FESTER TEIL
FIXED PART

| | |
|---|---|
| G11 | H1-17<br>B1-45 |
| G12 | H2-17<br>B1-45 |
| G13 | H3-31<br>B1-45 |
| G14 | H4-45<br>B1-45 |
| G24 | H4-45<br>B2-31 |
| G34 | H4-45<br>B3-31 |
| G41 | H1-17<br>B4-45 |
| G42 | H2-17<br>B4-45 |
| G43 | H3-31<br>B4-45 |
| G44 | H4-45<br>B4-45 |

PRIMAIRE VLEUGEL
PREMIERE VANTAIL
GANGFLEUGEL
FIRST VENT

| | |
|---|---|
| G31 | H1-17<br>VB3-42 |
| G32 | H2-17<br>VB3-138 |
| G33 | H3-17<br>VB3-42 |

SECUNDAIRE VLEUGEL
DEUXIEME VANTAIL
STANDFLEUGEL
SECOND VENT

| | |
|---|---|
| G21 | H1-17<br>VB2-42 |
| G22 | H2-17<br>VB2-138 |
| G23 | H3-17<br>VB2-42 |

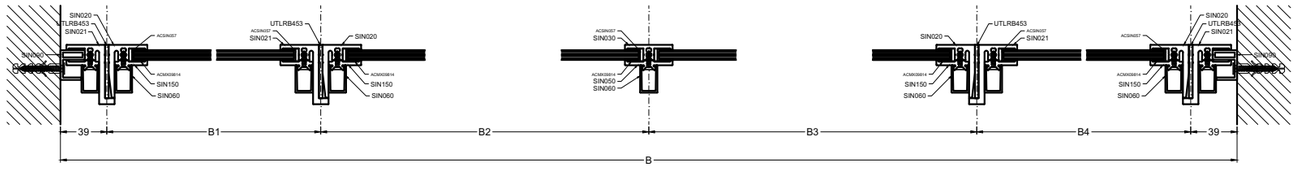


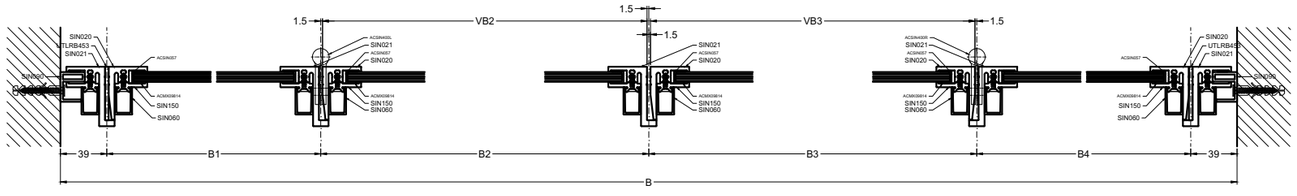


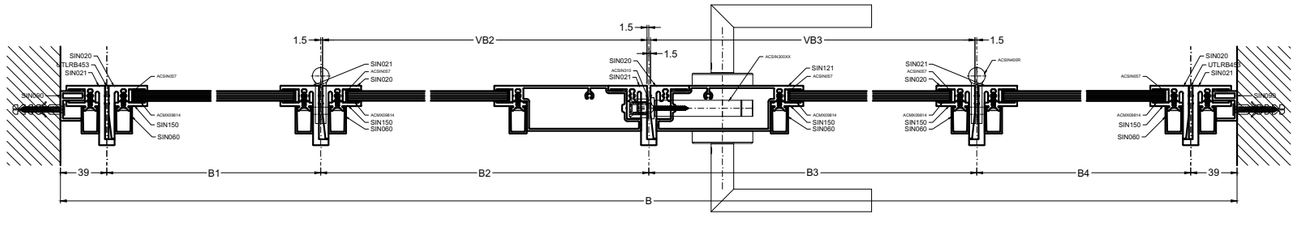


| | | |
|---|---|---|
| VB2<br>VB3 | VLEUGELBREEDTE<br>LARGEUR VANTAIL<br>BREITE FLUGEL<br>WIDTH SASH | B2-3<br>B3-3 |
| VH | VLEUGELHOOGTE<br>HAUTEUR D'OUVRANT<br>FLUGEL HOHE<br>VENT HEIGHT | H1+H2+H3+11 |

(*) OPTIONEEL
EN OPTION
FAKULTATIV
OPTIONAL

# SCHARNIER093A_SLOT

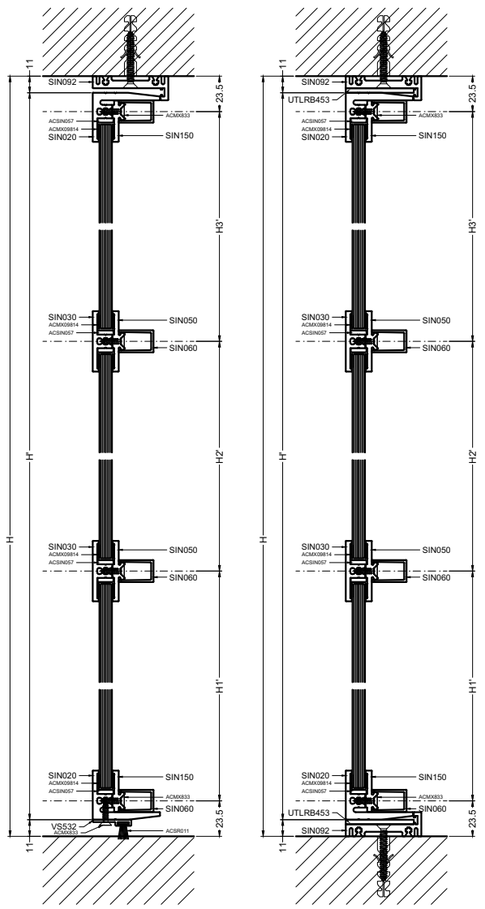


| | |
|---|---|
| H' | H - 22 |
| Ba' | Ba - 16.5 |
| Bb' | Bb - 11 |
| Bc' | Bc -16.5 |

| | |
|---|---|
| (*) | OPTIONEEL<br>EN OPTION<br>FAKULTATIV<br>OPTIONAL |

VAST ONDERDEEL
PARTIE FIXE
FESTER TEIL
FIXED PART

| | | | | |
|---|---|---|---|---|
| SIN092 | | 2 | | H |
| | | 1 | | B-16 |
| | | 1 | | Ba-10.5 |
| | | 1 | | Bc-10.5 |
| SIN094 | | 2 | | H-8 |

| | | | | |
|---|---|---|---|---|
| SIN020 | | 2 | | H' |
| | | 2 | | Ba'-10 |
| SIN030 | | 2 | | Ba'-34 |
| SIN050 | | 2 | | Ba'-10 |
| SIN060 | | 2 | | Ba'-10 |
| SIN150 | | 2 | | Ba'-10 |
| | | 2 | | H1'-40 |
| | | 2 | | H2'-40 |
| | | 2 | | H3'-40 |
| SIN060 | | 2 | | Ba'-10 |
| | | 2 | | H1'-14.6 |
| | | 2 | | H2'-14.6 |
| | | 2 | | H3'-14.6 |
| UTLRB453 | | 2 | | H'+6 |
| | | 2 | | Ba' |

| | | | | |
|---|---|---|---|---|
| SIN020 | | 2 | | H' |
| | | 2 | | Bc'-10 |
| SIN030 | | 2 | | Bc'-34 |
| SIN050 | | 2 | | Bc'-10 |
| SIN060 | | 2 | | Bc'-10 |
| SIN150 | | 2 | | Bc'-10 |
| | | 2 | | H1'-40 |
| | | 2 | | H2'-40 |
| | | 2 | | H3'-40 |
| SIN060 | | 2 | | Bc'-10 |
| | | 2 | | H1'-14.6 |
| | | 2 | | H2'-14.6 |
| | | 2 | | H3'-14.6 |
| UTLRB453 | | 2 | | H'+6 |
| | | 2 | | Bc' |

VLEUGEL
OUVRANT
FLUGEL
VENT

| | | | | |
|---|---|---|---|---|
| SIN020 | | 2 | | H' |
| | | 2 | | Bb'-10 |
| SIN030 | | 2 | | Bb'-34 |
| SIN050 | | 2 | | Bb'-10 |
| SIN060 | | 2 | | Bb'-10 |
| SIN150 | | 2 | | Bb'-10 |
| | | 2 | | H1'-40 |
| | | 2 | | H2'-40 |
| | | 2 | | H3'-40 |
| SIN060 | | 2 | | Bb'-10 |
| | | 2 | | H1'-14.6 |
| | | 2 | | H2'-14.6 |
| | | 2 | | H3'-14.6 |
| SIN121 | | 1 | | H2'-15 |
| VS532 (*) | | 1 | | Bb' |

| | |
|---|---|
| O ACSIN057 | 52 |
| ACSIN400R(L) | 4 |
| ACMX09814 | 6H+H2+6B |
| ACMX09814<br>or (to ~2005) OR<br>ACMX09816 | 6H+6B |
| ACSR011 (*) | Bb' |

OVERZICHT SLOTEN, ZIE WERKTEKENINGEN
APERCU SERRURES, VOIR LES DESSINS DE CONSTOUCTION
UEBERSICHT SCHLOESSER, SIEHE KONSTRUKTIONZEICHNUNGEN
OVERVIEW LOCKS, SEE CONSTRUCTION DRAWINGS

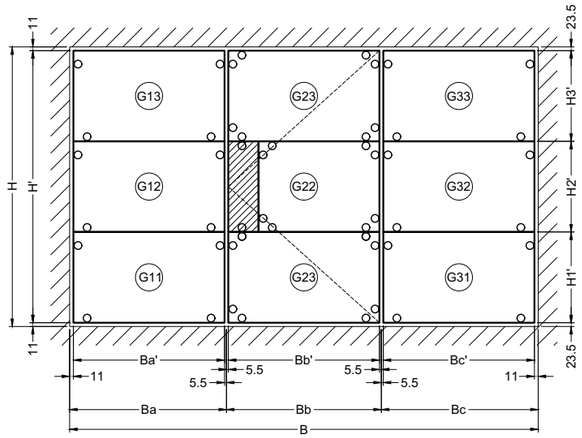


VAST ONDERDEEL
PARTIE FIXE
FESTER TEIL
FIXED PART

| | |
|---|---|
| G11 | H1'-17<br>Ba'-42 |
| G12 | H2'-17<br>Ba'-42 |
| G13 | H3'-17<br>Ba'-42 |

| | |
|---|---|
| G31 | H1'-17<br>Bc'-42 |
| G32 | H2'-17<br>Bc'-42 |
| G33 | H3'-17<br>Bc'-42 |

VLEUGEL
OUVRANT
FLUGEL
VENT

| | |
|---|---|
| G21 | H1'-17<br>Bb'-42 |
| G22 | H2'-17<br>Bb'-138 |
| G23 | H3'-17<br>Bb'-42 |

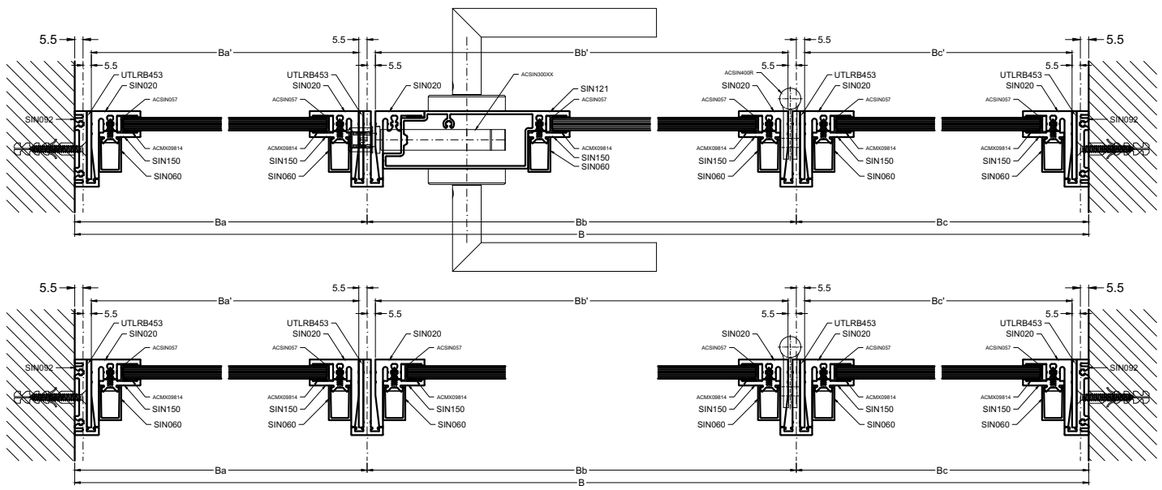


SCHARNIER093A_SLOT

aliplast
member of
CORIALIS

ZAAGTABELLEN-COUPES ET DEBITS-ZUSCHNITTSTABELLEN-FABRICATION CHARTS

# SCHARNIER093A2_SLOT

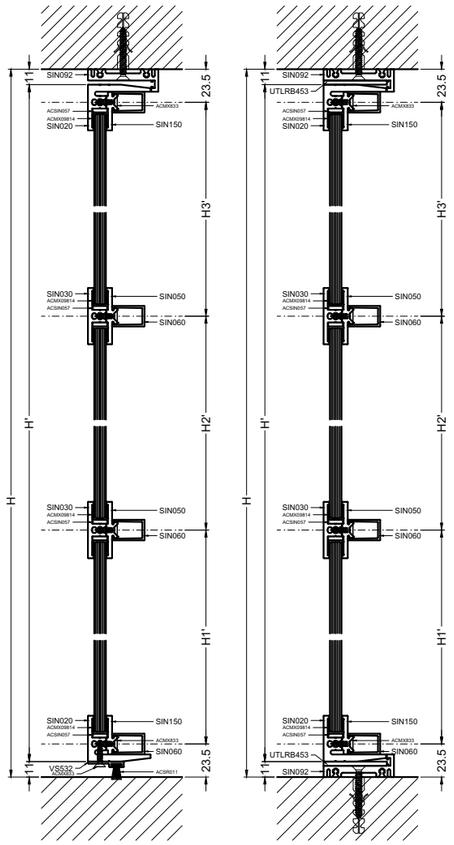


VAST ONDERDEEL
PARTIE FIXE
FESTER TEIL
FIXED PART

| | | | | |
|---|---|---|---|---|
| SIN092 | | 2 | | H |
| | | 1 | | B-16 |
| | | 1 | | Ba-10.5 |
| | | 1 | | Bd-10.5 |
| SIN094 | | 2 | | H-8 |

| | | | | |
|---|---|---|---|---|
| SIN020 | | 2 | | H' |
| | | 2 | | Ba'-10 |
| SIN030 | | 2 | | Ba'-34 |
| SIN050 | | 2 | | Ba'-10 |
| SIN060 | | 2 | | Ba'-10 |
| SIN150 | | 2 | | Ba'-10 |
| | | 2 | | H1'-40 |
| | | 2 | | H2'-40 |
| | | 2 | | H3'-40 |
| SIN060 | | 2 | | Ba'-10 |
| | | 2 | | H1'-14.6 |
| | | 2 | | H2'-14.6 |
| | | 2 | | H3'-14.6 |
| UTLRB453 | | 2 | | H'+6 |
| | | 2 | | Ba' |

| | | | | |
|---|---|---|---|---|
| SIN020 | | 2 | | H' |
| | | 2 | | Bd'-10 |
| SIN030 | | 2 | | Bd'-34 |
| SIN050 | | 2 | | Bd'-10 |
| SIN060 | | 2 | | Bd'-10 |
| SIN150 | | 2 | | Bd'-10 |
| | | 2 | | H1'-40 |
| | | 2 | | H2'-40 |
| | | 2 | | H3'-40 |
| SIN060 | | 2 | | Bd'-10 |
| | | 2 | | H1'-14.6 |
| | | 2 | | H2'-14.6 |
| | | 2 | | H3'-14.6 |
| UTLRB453 | | 2 | | H'+6 |
| | | 2 | | Bd' |

SECUNDAIRE VLEUGEL
DEUXIEME VANTAIL
STANDFLEUGEL
SECOND VENT

| | | | | |
|---|---|---|---|---|
| SIN020 | | 2 | | H' |
| | | 2 | | Bb'-10 |
| SIN030 | | 2 | | Bb'-34 |
| SIN050 | | 2 | | Bb'-10 |
| SIN060 | | 2 | | Bb'-10 |
| SIN150 | | 2 | | Bb'-10 |
| | | 2 | | H1'-40 |
| | | 2 | | H2'-40 |
| | | 2 | | H3'-40 |
| SIN060 | | 2 | | Bb'-10 |
| | | 2 | | H1'-14.6 |
| | | 2 | | H2'-14.6 |
| | | 2 | | H3'-14.6 |
| SIN121 | | 1 | | H2'-15 |
| VS532 (*) | | 1 | | Bb' |
| UTLRB453 | | 1 | | H' |
| SIN094 | | 1 | | H' |

PRIMAIRE VLEUGEL
PREMIERE VANTAIL
GANGFLEUGEL
FIRST VENT

| | | | | |
|---|---|---|---|---|
| SIN020 | | 2 | | H' |
| | | 2 | | Bc'-10 |
| SIN030 | | 2 | | Bc'-34 |
| SIN050 | | 2 | | Bc'-10 |
| SIN060 | | 2 | | Bc'-10 |
| SIN150 | | 2 | | Bc'-10 |
| | | 2 | | H1'-40 |
| | | 2 | | H2'-40 |
| | | 2 | | H3'-40 |
| SIN060 | | 2 | | Bc'-10 |
| | | 2 | | H1'-14.6 |
| | | 2 | | H2'-14.6 |
| | | 2 | | H3'-14.6 |
| SIN121 | | 1 | | H2'-15 |
| VS532 (*) | | 1 | | Bc' |

| | |
|---|---|
| ACSIN057 | 80 |
| ACSIN400R | 4 |
| ACSIN400L | 4 |
| ACMX09814 | 8H+2H2+6B |
| ACMX09814<br>OF ACMX09816<br>ACMX09816 | 8H+6B |
| ACSR011 (*) | Bb'+Bc' |
| ACSIN330 | 2 |
| ACSIN331 | 1 |

OVERZICHT SLOTEN, ZIE WERKTEKENINGEN
APERCU SERRURES, VOIR LES DESSINS DE CONSTOUCTION
UEBERSICHT SCHLOESSER, SIEHE KONSTRUKTIONZEICHNUNGEN
OVERVIEW LOCKS, SEE CONSTRUCTION DRAWINGS

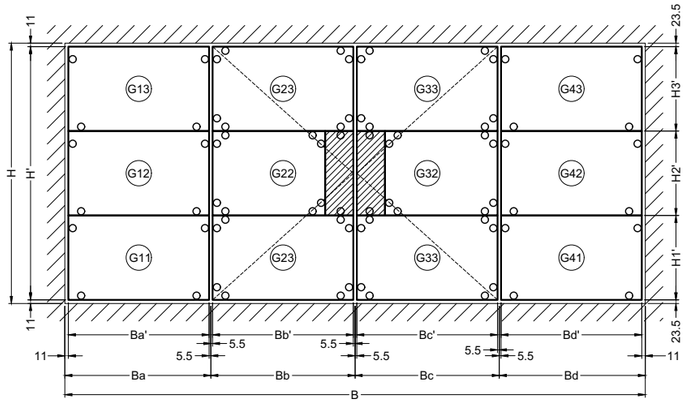


VAST ONDERDEEL
PARTIE FIXE
FESTER TEIL
FIXED PART

| | |
|---|---|
| G11 | H1'-17<br>Ba'-42 |
| G12 | H2'-17<br>Ba'-42 |
| G13 | H3'-17<br>Ba'-42 |

PRIMAIRE VLEUGEL
PREMIERE VANTAIL
GANGFLEUGEL
FIRST VENT

| | |
|---|---|
| G31 | H1'-17<br>Bc'-42 |
| G32 | H2'-17<br>Bc'-138 |
| G33 | H3'-17<br>Bc'-42 |

| | |
|---|---|
| G41 | H1'-17<br>Bd'-42 |
| G42 | H2'-17<br>Bd'-42 |
| G43 | H3'-17<br>Bd'-42 |

SECUNDAIRE VLEUGEL
DEUXIEME VANTAIL
STANDFLEUGEL
SECOND VENT

| | |
|---|---|
| G21 | H1'-17<br>Bb'-42 |
| G22 | H2'-17<br>Bb'-138 |
| G23 | H3'-17<br>Bb'-42 |

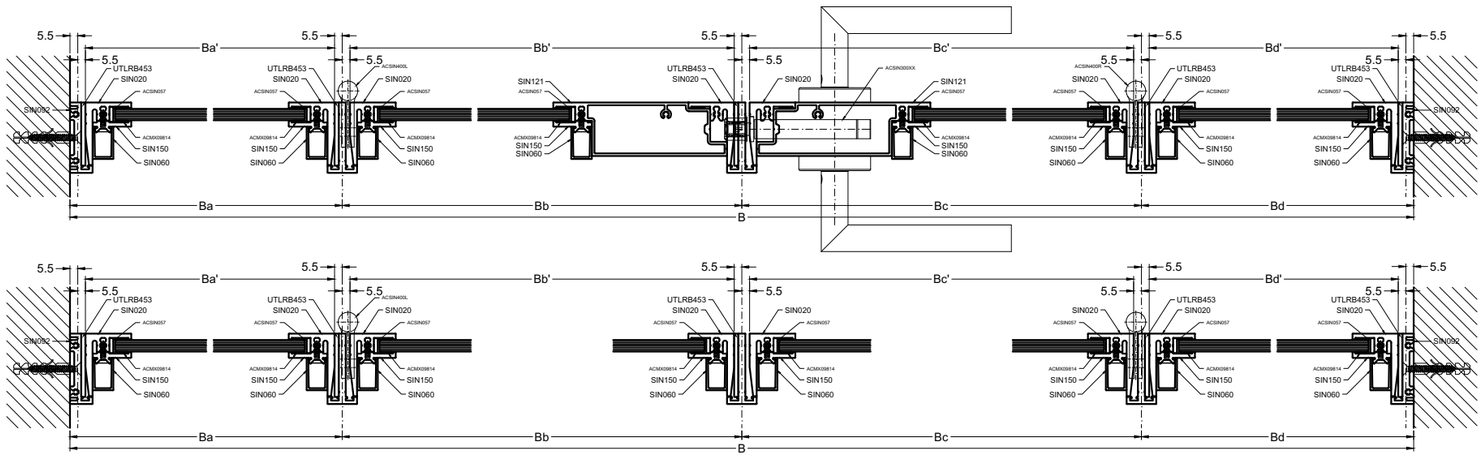


| | |
|---|---|
| H' | H - 22 |
| Ba' | Ba - 16.5 |
| Bb' | Bb - 11 |
| Bc' | Bc - 11 |
| Bd' | Bd - 16.5 |

(*) OPTIONEEL
EN OPTION
FAKULTATIV
OPTIONAL

SCHARNIER093A2_SLOT

# SCHARNIER093B_SLOT

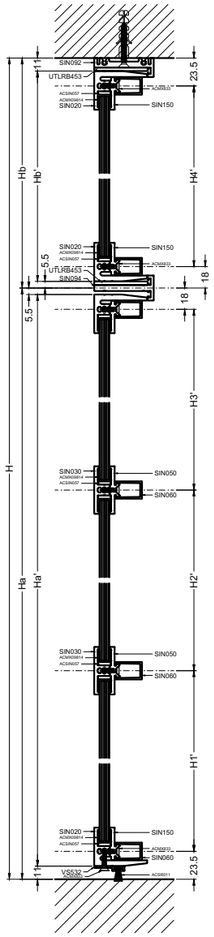


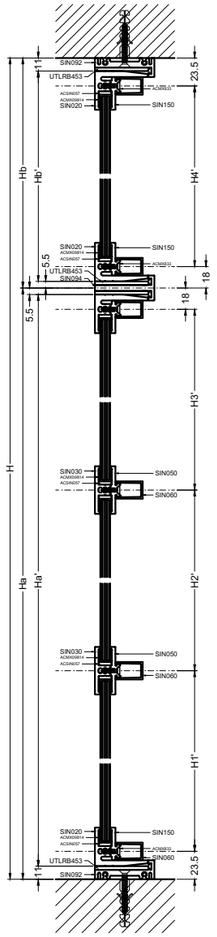


VAST ONDERDEEL
PARTIE FIXE
FESTER TEIL
FIXED PART

| | | | | |
|---|---|---|---|---|
| SIN092 | | 2 | | H |
| | | 1 | | B-16 |
| | | 1 | | Ba-10.5 |
| | | 1 | | Bc-10.5 |
| SIN094 | | 2 | | H-8 |
| | | 1 | | Ba-10.5 |
| | | 1 | | Bb-10.5 |
| | | 1 | | Bc-10.5 |

| | | | | |
|---|---|---|---|---|
| SIN020 | | 2 | | Ha' |
| | | 2 | | Ba'-10 |
| SIN030 | | 2 | | Ba'-34 |
| SIN050 | | 2 | | Ba'-10 |
| SIN060 | | 2 | | Ba'-10 |
| SIN150 | | 2 | | Ba'-10 |
| | | 2 | | H1'-40 |
| | | 2 | | H2'-40 |
| | | 2 | | H3'-40 |
| SIN060 | | 2 | | Ba'-10 |
| | | 2 | | H1'-14.6 |
| | | 2 | | H2'-14.6 |
| | | 2 | | H3'-14.6 |
| UTLRB453 | | 2 | | Ha'+6 |
| | | 2 | | Ba' |

| | | | | |
|---|---|---|---|---|
| SIN020 | | 2 | | Ha' |
| | | 2 | | Bc'-10 |
| SIN030 | | 2 | | Bc'-34 |
| SIN050 | | 2 | | Bc'-10 |
| SIN060 | | 2 | | Bc'-10 |
| SIN150 | | 2 | | Bc'-10 |
| | | 2 | | H1'-40 |
| | | 2 | | H2'-40 |
| | | 2 | | H3'-40 |
| SIN060 | | 2 | | Bc'-10 |
| | | 2 | | H1'-14.6 |
| | | 2 | | H2'-14.6 |
| | | 2 | | H3'-14.6 |
| UTLRB453 | | 2 | | Ha'+6 |
| | | 2 | | Bc' |

| | | | | |
|---|---|---|---|---|
| SIN020 | | 2 | | Hb' |
| | | 2 | | Ba'-10 |
| SIN150 | | 2 | | Hb'-58 |
| | | 2 | | Ba'-10 |
| SIN060 | | 2 | | Hb'-32.6 |
| | | 2 | | Ba'-10 |
| UTLRB453 | | 2 | | Hb'+13 |
| | | 2 | | Ba' |

| | | | | |
|---|---|---|---|---|
| SIN020 | | 2 | | Hb' |
| | | 2 | | Bb'-10 |
| SIN150 | | 2 | | Hb'-58 |
| | | 2 | | Bb'-10 |
| SIN060 | | 2 | | Hb'-32.6 |
| | | 2 | | Bb'-10 |
| UTLRB453 | | 2 | | Hb'+13 |
| | | 2 | | Bb' |

| | | | | |
|---|---|---|---|---|
| SIN020 | | 2 | | Hb' |
| | | 2 | | Bc'-10 |
| SIN150 | | 2 | | Hb'-58 |
| | | 2 | | Bc'-10 |
| SIN060 | | 2 | | Hb'-32.6 |
| | | 2 | | Bc'-10 |
| UTLRB453 | | 2 | | Hb'+13 |
| | | 2 | | Bc' |

VLEUGEL
OUVRANT
FLUGEL
VENT

| | | | | |
|---|---|---|---|---|
| SIN020 | | 2 | | Ha' |
| | | 2 | | Bb'-10 |
| SIN030 | | 2 | | Bb'-34 |
| SIN050 | | 2 | | Bb'-10 |
| SIN060 | | 2 | | Bb'-10 |
| SIN150 | | 2 | | Bb'-10 |
| | | 2 | | H1'-40 |
| | | 2 | | H2'-40 |
| | | 2 | | H3'-40 |
| SIN060 | | 2 | | Bb'-10 |
| | | 2 | | H1'-14.6 |
| | | 2 | | H2'-14.6 |
| | | 2 | | H3'-14.6 |
| SIN121 | | 1 | | H2'-15 |
| VS532 (*) | | 1 | | Bb' |

| | |
|---|---|
| ACSIN057 | 64 |
| ACSIN400R(L) | 4 |
| ACMX09814 | 6H+H2+8B |
| ACMX09814<br>ACMX09816 | 6H+8B |
| ACSR011 (*) | Bb' |

OVERZICHT SLOTEN, ZIE WERKTEKENINGEN
APERCU SERRURES, VOIR LES DESSINS DE CONSTOUCTION
UEBERSICHT SCHLOESSER, SIEHE KONSTRUKTIONZEICHNUNGEN
OVERVIEW LOCKS, SEE CONSTRUCTION DRAWINGS

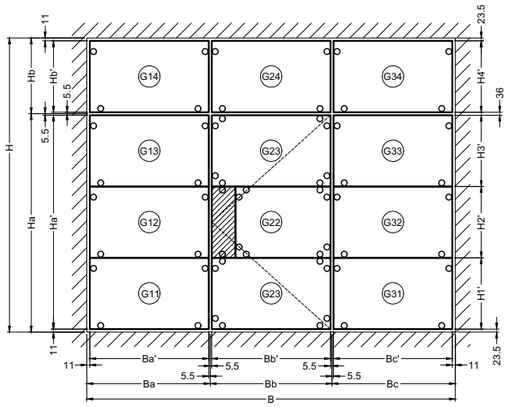


VAST ONDERDEEL
PARTIE FIXE
FESTER TEIL
FIXED PART

| | |
|---|---|
| G11 | H1'-17<br>Ba'-42 |
| G12 | H2'-17<br>Ba'-42 |
| G13 | H3'-17<br>Ba'-42 |

| | |
|---|---|
| G31 | H1'-17<br>Bc'-42 |
| G32 | H2'-17<br>Bc'-42 |
| G33 | H3'-17<br>Bc'-42 |

| | |
|---|---|
| G14 | H4'-17<br>Ba'-42 |
| G24 | H4'-17<br>Bb'-42 |
| G34 | H4'-17<br>Bc'-42 |

VLEUGEL
OUVRANT
FLUGEL
VENT

| | |
|---|---|
| G21 | H1'-17<br>Bb'-42 |
| G22 | H2'-17<br>Bb'-138 |
| G23 | H3'-17<br>Bb'-42 |

| | |
|---|---|
| Ha' | Ha - 16.5 |
| Hb' | Hb - 16.5 |
| Ba' | Ba - 16.5 |
| Bb' | Bb - 11 |
| Bc' | Bc - 16.5 |

| | |
|---|---|
| (*) | OPTIONEEL<br>EN OPTION<br>FAKULTATIV<br>OPTIONAL |

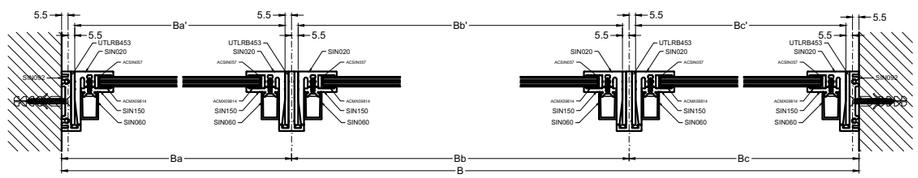


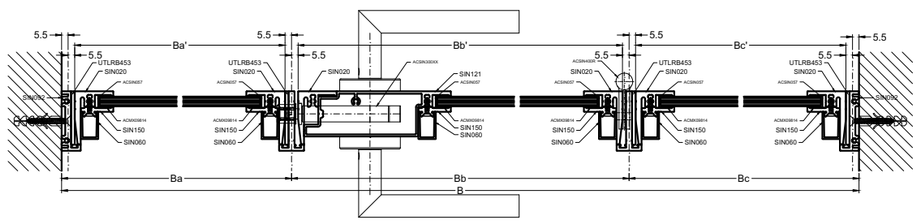


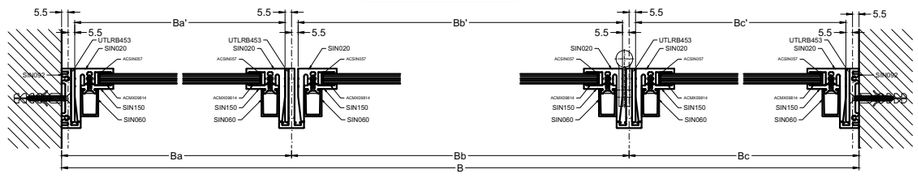


SCHARNIER093B_SLOT

aliplast
member of
CORIALIS

ZAAGTABELLEN-COUPES ET DEBITS-ZUSCHNITTSTABELLEN-FABRICATION CHARTS

# VERBORGEN001A_SLOT

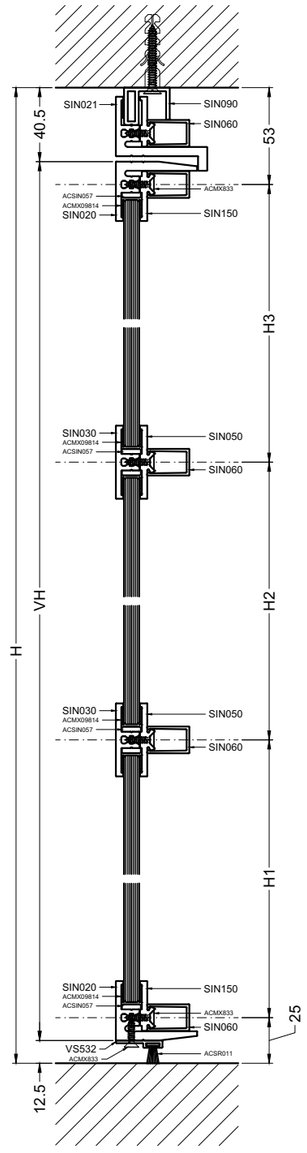


BUITENKADER
DORMANT
BLENDRAHMEN
OUTER FRAME

| | | | | |
|---|---|---|---|---|
| SIN090 | | 2 | | H |
| | | 1 | | B-35 |
| SIN320 | | 1 | | H-5 |
| SIN021 | | 2 | | H-5 |
| | | 1 | | B-99.5 |
| SIN150 | | 2 | | H-5 |
| | | 1 | | B-64.6 |
| SIN060 | | 2 | | H-17.7 |
| | | 1 | | B-64.6 |

VLEUGEL
OUVRANT
FLUGEL
VENT

| | | | | |
|---|---|---|---|---|
| SIN020 | | 2 | | VH |
| | | 2 | | VB-10 |
| SIN320 | | 1 | | VH-10 |
| SIN030 | | 2 | | VB-58.5 |
| SIN050 | | 2 | | VB-34.5 |
| SIN060 | | 2 | | VB-34.5 |
| SIN150 | | 2 | | VB-34.5 |
| | | 2 | | H1-40 |
| | | 2 | | H2-40 |
| | | 2 | | H3-40 |
| SIN060 | | 2 | | VB-34.5 |
| | | 2 | | H1-14.6 |
| | | 2 | | H2-14.6 |
| | | 2 | | H3-14.6 |
| SIN121 | | 1 | | H2-15 |
| VS532 (*) | | 1 | | VB |

| | | |
|---|---|---|
| ○ | ACSIN057 | 28 |
| | ACSIN430 | 3 |
| | ACSIN431 | 3 |
| | ACMX09814 | 4H+H2+7B |
| | ACMX09814 OF / OU / ODER / OR ACMX09816 | 2H+6B |
| | ACSR011 (*) | VB |

| | | |
|---|---|---|
| VB | VLEUGELBREEDTE<br>LARGEUR VANTAIL<br>BREITE FLUGEL<br>WIDTH SASH | B-105.5 |
| VH | VLEUGELHOOGTE<br>HAUTEUR D'OUVRANT<br>FLUGEL HOHE<br>VENT HEIGHT | H-53 |

OVERZICHT SLOTEN, ZIE WERKTEKENINGEN
APERCU SERRURES, VOIR LES DESSINS DE CONSTOUCTION
UEBERSICHT SCHLOESSER, SIEHE KONSTRUKTIONZEICHNUNGEN
OVERVIEW LOCKS, SEE CONSTRUCTION DRAWINGS

(*) OPTIONEEL
EN OPTION
FAKULTATIV
OPTIONAL

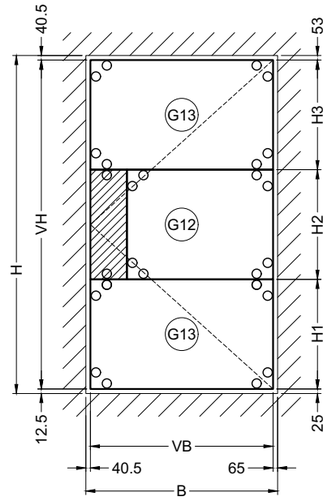


VLEUGEL
OUVRANT
FLUGEL
VENT

| | |
|---|---|
| G11 | H1-17<br>VB-66.5 |
| G12 | H2-17<br>VB-162.5 |
| G13 | H3-17<br>VB-66.5 |

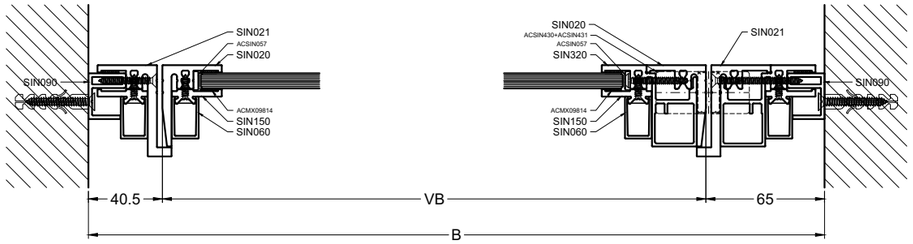


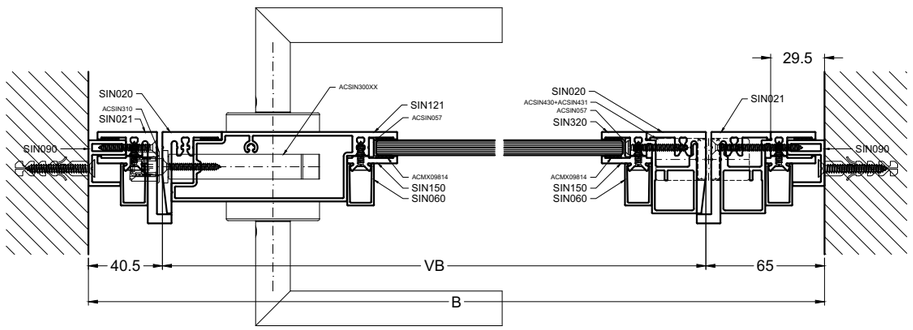

# VERBORGEN001A2_SLOT

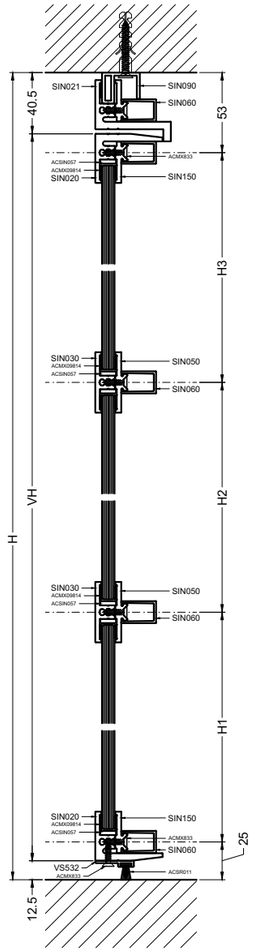


BUITENKADER
DORMANT
BLENDRAHMEN
OUTER FRAME

| | | | | |
|---|---|---|---|---|
| SIN090 | | 2 | | H |
| | | 1 | | B-35 |
| SIN320 | | 2 | | H-5 |
| SIN021 | | 2 | | H-5 |
| | | 1 | | B-124 |
| SIN150 | | 2 | | H-5 |
| | | 1 | | B-64.6 |
| SIN060 | | 2 | | H-17.7 |
| | | 1 | | B-64.6 |

PRIMAIRE VLEUGEL
PREMIERE VANTAIL
GANGFLEUGEL
FIRST VENT

| | | | | |
|---|---|---|---|---|
| SIN020 | | 2 | | VH |
| | | 2 | | VB2-10 |
| SIN320 | | 1 | | VH-10 |
| SIN030 | | 2 | | VB2-58.5 |
| SIN050 | | 2 | | VB2-34.5 |
| SIN060 | | 2 | | VB2-34.5 |
| SIN150 | | 2 | | VB2-34.5 |
| | | 2 | | H1-40 |
| | | 2 | | H2-40 |
| | | 2 | | H3-40 |
| SIN060 | | 2 | | VB2-34.5 |
| | | 2 | | H1-14.6 |
| | | 2 | | H2-14.6 |
| | | 2 | | H3-14.6 |
| SIN121 | | 1 | | H2-15 |
| VS532 (*) | | 1 | | VB2 |

OVERZICHT SLOTEN, ZIE WERKTEKENINGEN
APERCU SERRURES, VOIR LES DESSINS DE CONSTOUCTION
UEBERSICHT SCHLOESSER, SIEHE KONSTRUKTIONZEICHNUNGEN
OVERVIEW LOCKS, SEE CONSTRUCTION DRAWINGS

SECUNDAIRE VLEUGEL
DEUXIEME VANTAIL
STANDFLEUGEL
SECOND VENT

| | | | | |
|---|---|---|---|---|
| SIN020 | | 1 | | VH |
| | | 2 | | VB1-10 |
| SIN320 | | 1 | | VH-10 |
| SIN021 | | 1 | | VH |
| SIN030 | | 2 | | VB1-58.5 |
| SIN050 | | 2 | | VB1-34.5 |
| SIN060 | | 2 | | VB1-34.5 |
| SIN150 | | 2 | | VB1-62 |
| | | 1 | | H1-40 |
| | | 1 | | H1-12.5 |
| | | 2 | | H2-40 |
| | | 1 | | H3-40 |
| | | 1 | | H3-12.5 |
| SIN060 | | 2 | | VB1-49.3 |
| | | 1 | | H1-14.6 |
| | | 1 | | H1-139.8 |
| | | 2 | | H2-14.6 |
| | | 1 | | H3-14.6 |
| | | 1 | | H3-139.8 |
| SIN121 | | 1 | | H2-15 |
| VS532 (*) | | 1 | | VB1 |

| | |
|---|---|
| ACSIN057 | 56 |
| ACSIN430 | 6 |
| ACSIN431 | 6 |
| ACMX09814 | 6H+2H2+7B |
| ACMX09814<br>OF / OU / ODER / OR<br>ACMX09816 | 4H+6B |
| ACSR011 (*) | VB1+VB2 |
| ACSIN330 | 2 |
| ACSIN331 | 1 |
| ACSIN340 | 2 |

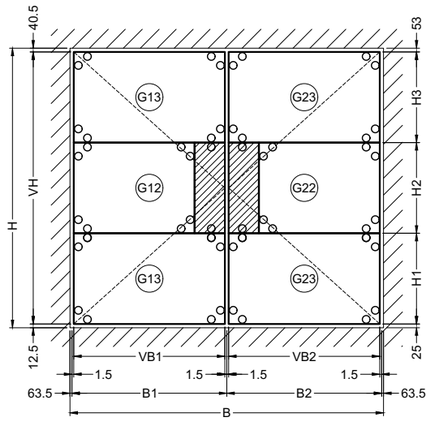


PRIMAIRE VLEUGEL
PREMIERE VANTAIL
GANGFLEUGEL
FIRST VENT

| | |
|---|---|
| G21 | H1-17<br>VB2-66.5 |
| G22 | H2-17<br>VB2-162.5 |
| G23 | H3-17<br>VB2-66.5 |

SECUNDAIRE VLEUGEL
DEUXIEME VANTAIL
STANDFLEUGEL
SECOND VENT

| | |
|---|---|
| G11 | H1-17<br>VB1-66.5 |
| G12 | H2-17<br>VB1-162.5 |
| G13 | H3-17<br>VB1-66.5 |

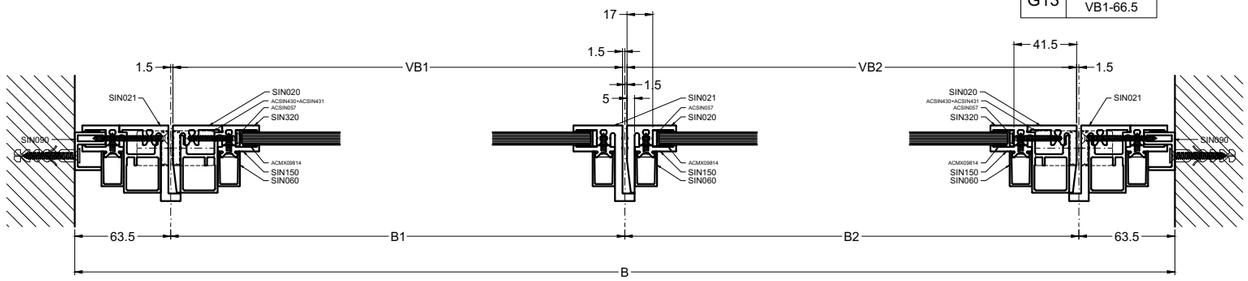


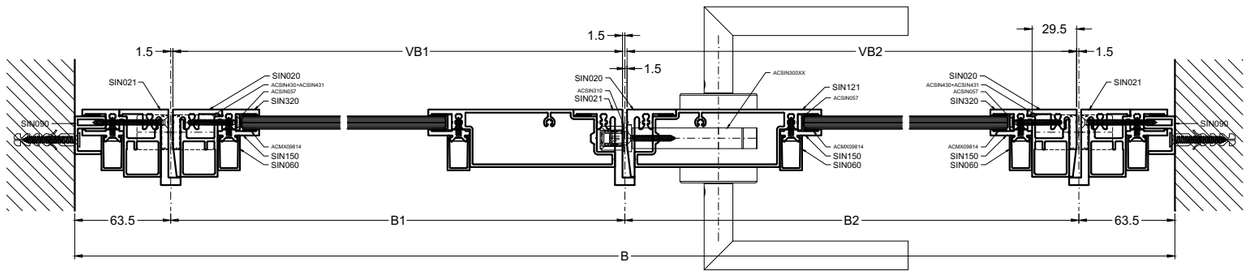


| | | |
|---|---|---|
| VB1<br>VB2 | VLEUGELBREEDTE<br>LARGEUR VANTAIL<br>BREITE FLUGEL<br>WIDTH SASH | B1-3<br>B2-3 |
| VH | VLEUGELHOOGTE<br>HAUTEUR D'OUVRANT<br>FLUGEL HOHE<br>VENT HEIGHT | H-53 |

(*) OPTIONEEL
EN OPTION
FAKULTATIV
OPTIONAL

ZAAGTABELLEN-COUPES ET DEBITS-ZUSCHNITTSTABELLEN-FABRICATION CHARTS

# VERBORGEN002A_SLOT

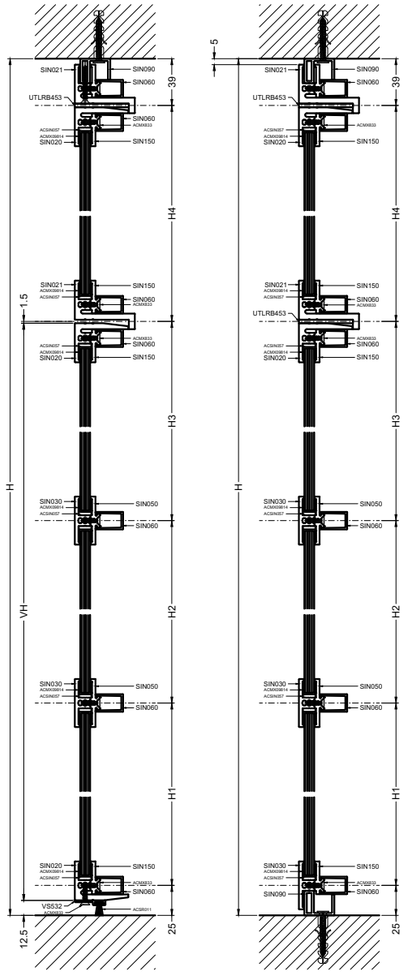


VAST ONDERDEEL
PARTIE FIXE
FESTER TEIL
FIXED PART

| | | | | |
|---|---|---|---|---|
| SIN090 | | 2 | | H |
| | | 1 | | B-35 |
| SIN021 | | 2 | | H-5 |
| | | 1 | | B-75 |
| SIN150 | | 2 | | H-5 |
| | | 1 | | B-64.6 |
| SIN060 | | 2 | | H-17.7 |
| | | 1 | | B-64.6 |

| | | | | |
|---|---|---|---|---|
| SIN021 | | 2 | | H-37.5 |
| | | 1 | | B1-5 |
| | | 1 | | B2+3 |
| | | 1 | | B3-5 |
| UTLRB453 | | 4 | | H4-32.5 |
| | | 2 | | H1+H2+H3-9 |
| | | 1 | | B1-60 |
| | | 1 | | B1-32.5 |
| | | 1 | | B2-117 |
| | | 1 | | B3-60 |
| | | 1 | | B3-32.5 |
| SIN020 | | 4 | | H4-5 |
| | | 2 | | H1+H2+H3+23.5 |
| | | 2 | | B1-13 |
| | | 1 | | B2-13 |
| | | 2 | | B3-13 |
| SIN090 | | 1 | | B1-37.5 |
| | | 1 | | B3-37.5 |
| SIN030 | | 3 | | B1-61.5 |
| | | 3 | | B3-61.5 |
| SIN050 | | 2 | | B1-37.5 |
| | | 2 | | B3-37.5 |
| SIN060 | | 2 | | B1-37.5 |
| | | 2 | | B4-37.5 |
| SIN320 | | 4 | | H4-5 |
| | | 2 | | H1+H2+H3-18.5 |

| | | | | |
|---|---|---|---|---|
| SIN150 | | 4 | | B1-37.5 |
| | | 2 | | B2-62 |
| | | 4 | | B3-37.5 |
| | | 4 | | H1-40 |
| | | 4 | | H2-40 |
| | | 4 | | H3-54 |
| | | 6 | | H4-68 |
| SIN060 | | 4 | | B1-37.5 |
| | | 2 | | B2-62 |
| | | 4 | | B4-37.5 |
| | | 4 | | H1-14.6 |
| | | 4 | | H2-14.6 |
| | | 4 | | H3-28.6 |
| | | 6 | | H4-42.6 |

VLEUGEL
OUVRANT
FLUGEL
VENT

| | | | | |
|---|---|---|---|---|
| SIN020 | | 2 | | VH |
| | | 2 | | VB-10 |
| SIN320 | | 1 | | VH-10 |
| SIN030 | | 2 | | VB-58.5 |
| SIN050 | | 2 | | VB-34.5 |
| SIN060 | | 2 | | VB-34.5 |
| SIN150 | | 2 | | VB-34.5 |
| | | 2 | | H1-40 |
| | | 2 | | H2-40 |
| | | 2 | | H3-40 |
| SIN060 | | 2 | | VB-34.5 |
| | | 2 | | H1-14.6 |
| | | 2 | | H2-14.6 |
| | | 2 | | H3-14.6 |
| SIN121 | | 1 | | H2-15 |
| VS532 (*) | | 1 | | VB |

| | |
|---|---|
| ACSIN057 | 60 |
| ACSIN430 | 3 |
| ACSIN431 | 3 |
| ACMX09814 | 6H+H2+8B |
| ACMX09814<br>ACMX09816 | 6H+8B |
| ACSR011 (*) | VB2 |

| | | |
|---|---|---|
| VB2 | VLEUGELBREEDTE<br>LARGEUR VANTAIL<br>BREITE FLUGEL<br>WIDTH SASH | B2-3 |
| VH | VLEUGELHOOGTE<br>HAUTEUR D'OUVRANT<br>FLUGEL HOHE<br>VENT HEIGHT | H1+H2+H3-14 |

OVERZICHT SLOTEN, ZIE WERKTEKENINGEN
APERCU SERRURES, VOIR LES DESSINS DE CONSTOUCTION
UEBERSICHT SCHLOESSER, SIEHE KONSTRUKTIONZEICHNUNGEN
OVERVIEW LOCKS, SEE CONSTRUCTION DRAWINGS

(*) OPTIONEEL
EN OPTION
FAKULTATIV
OPTIONAL

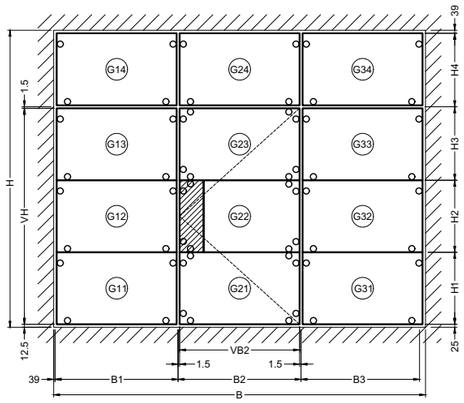


VAST ONDERDEEL
PARTIE FIXE
FESTER TEIL
FIXED PART

| | |
|---|---|
| G11 | H1-17<br>B1-69.5 |
| G12 | H2-17<br>B1-69.5 |
| G13 | H3-31<br>B1-69.5 |
| G14 | H4-45<br>B1-69.5 |
| G24 | H4-45<br>B2-94 |
| G31 | H1-17<br>B3-69.5 |
| G32 | H2-17<br>B3-69.5 |
| G33 | H3-31<br>B3-69.5 |
| G34 | H4-45<br>B3-69.5 |

VLEUGEL
VANTAIL
FLEUGEL
VENT

| | |
|---|---|
| G21 | H1-17<br>VB2-66.5 |
| G22 | H2-17<br>VB2-162.5 |
| G23 | H3-31<br>VB2-66.5 |

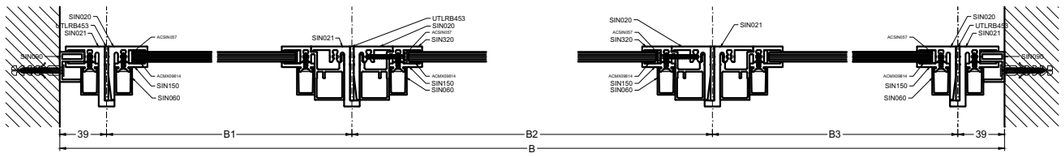


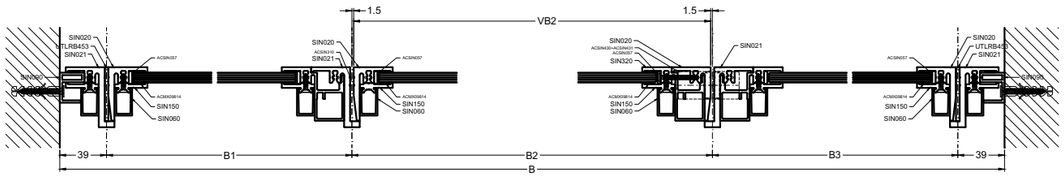


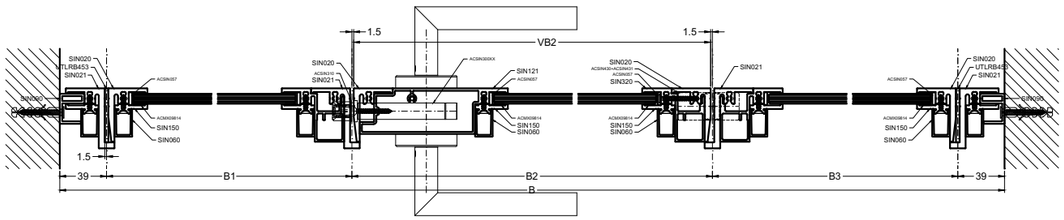

# VERBORGEN002A2_SLOT

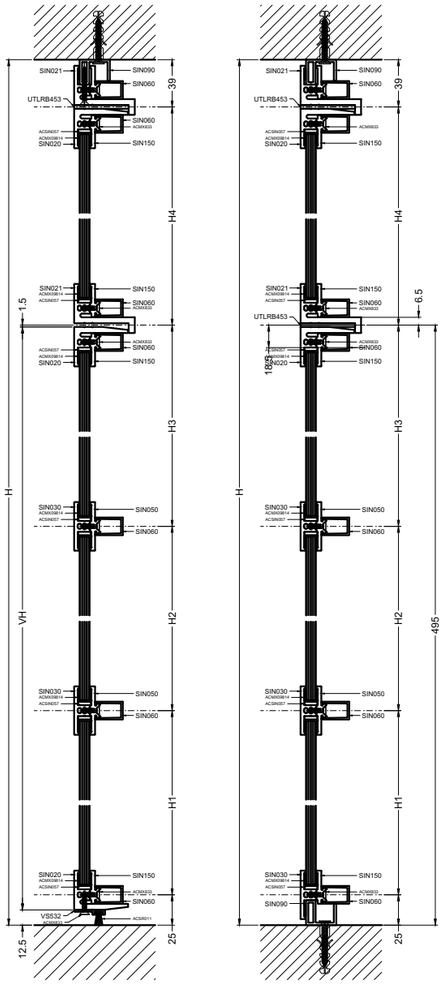


VAST ONDERDEEL
PARTIE FIXE
FESTER TEIL
FIXED PART

| | | | |
|---|---|---|---|
| SIN090 | 2 | | H |
| | 1 | | B-35 |
| SIN021 | 2 | | H-5 |
| | 1 | | B-75 |
| SIN150 | 2 | | H-5 |
| | 1 | | B-64.6 |
| SIN060 | 2 | | H-17.7 |
| | 1 | | B-64.6 |

| | | | |
|---|---|---|---|
| SIN021 | 2 | | H-37.5 |
| | 1 | | B1-5 |
| | 1 | | B2+B3+3 |
| | 1 | | B4-5 |
| UTLRB453 | 4 | | H4-32.5 |
| | 2 | | H1+H2+H3-9 |
| | 1 | | B1-60 |
| | 1 | | B1-32.5 |
| | 1 | | B4-60 |
| | 1 | | B4-32.5 |
| | 1 | | B2+B3-117 |
| SIN020 | 4 | | H4-5 |
| | 2 | | H1+H2+H3+23.5 |
| | 2 | | B1-13 |
| | 1 | | B2+B3-13 |
| | 2 | | B4-13 |
| SIN090 | 1 | | B1-37.5 |
| | 1 | | B4-37.5 |
| SIN030 | 3 | | B1-61.5 |
| | 3 | | B4-61.5 |
| | 1 | | H4-37 |
| SIN050 | 2 | | B1-37.5 |
| | 2 | | B4-37.5 |
| | 1 | | H4-68 |
| SIN060 | 2 | | B1-37.5 |
| | 2 | | B4-37.5 |
| | 1 | | H4-42.6 |
| SIN320 | 4 | | H4-5 |
| | 2 | | H1+H2+H3-18.5 |

| | | | |
|---|---|---|---|
| SIN150 | 4 | | B1-37.5 |
| | 2 | | B2+B3-62 |
| | 4 | | B4-37.5 |
| | 4 | | H1-40 |
| | 4 | | H2-40 |
| | 4 | | H3-54 |
| | 6 | | H4-68 |
| SIN060 | 4 | | B1-37.5 |
| | 2 | | B2+B3-62 |
| | 4 | | B4-37.5 |
| | 4 | | H1-14.6 |
| | 4 | | H2-14.6 |
| | 4 | | H3-28.6 |
| | 6 | | H4-42.6 |

PRIMAIRE VLEUGEL
PREMIERE VANTAIL
GANGFLEUGEL
FIRST VENT

| | | | |
|---|---|---|---|
| SIN020 | 2 | | VH |
| | 2 | | VB2-10 |
| SIN320 | 1 | | VH-10 |
| SIN030 | 2 | | VB2-58.5 |
| SIN050 | 2 | | VB2-34.5 |
| SIN060 | 2 | | VB2-34.5 |
| SIN150 | 2 | | VB2-34.5 |
| | 2 | | H1-40 |
| | 2 | | H2-40 |
| | 2 | | H3-40 |
| SIN060 | 2 | | VB2-34.5 |
| | 2 | | H1-14.6 |
| | 2 | | H2-14.6 |
| | 2 | | H3-14.6 |
| SIN121 | 1 | | H2-15 |
| VS532 (*) | 1 | | VB2 |

SECUNDAIRE VLEUGEL
DEUXIEME VANTAIL
STANDFLEUGEL
SECOND VENT

| | | | |
|---|---|---|---|
| SIN020 | 1 | | VH |
| | 2 | | VB1-10 |
| SIN320 | 1 | | VH-10 |
| SIN021 | 1 | | VH |
| SIN030 | 2 | | VB1-58.5 |
| SIN050 | 2 | | VB1-34.5 |
| SIN060 | 2 | | VB1-34.5 |
| SIN150 | 2 | | VB1-62 |
| | 1 | | H1-40 |
| | 1 | | H1-12.5 |
| | 2 | | H2-40 |
| | 1 | | H3-40 |
| | 1 | | H3-12.5 |
| SIN060 | 2 | | VB1-49.3 |
| | 1 | | H1-14.6 |
| | 1 | | H1-139.8 |
| | 2 | | H2-14.6 |
| | 1 | | H3-14.6 |
| | 1 | | H3-139.8 |
| SIN121 | 1 | | H2-15 |
| VS532 (*) | 1 | | VB1 |

| | |
|---|---|
| ACSIN057 | 96 |
| ACSIN430 | 6 |
| ACSIN431 | 6 |
| ACMX09814 | 10H+2H2+9B+B1+B4 |
| ACMX09814 ACMX09816 | 8H+8B |
| ACSR011 (*) | VB2+VB3 |
| ACSIN330 | 2 |
| ACSIN331 | 1 |
| ACSIN340 | 2 |

OVERZICHT SLOTEN, ZIE WERKTEKENINGEN
APERCU SERRURES, VOIR LES DESSINS DE CONSTOUCTION
UEBERSICHT SCHLOESSER, SIEHE KONSTRUKTIONZEICHNUNGEN
OVERVIEW LOCKS, SEE CONSTRUCTION DRAWINGS

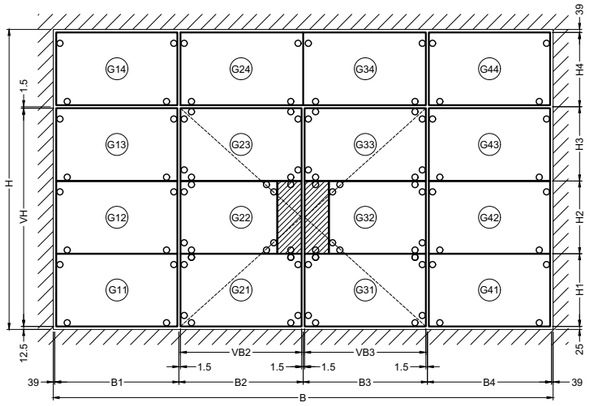


| | | |
|---|---|---|
| VB2<br>VB3 | VLEUGELBREEDTE<br>LARGEUR VANTAIL<br>BREITE FLUGEL<br>WIDTH SASH | B2-3<br>B3-3 |
| VH | VLEUGELHOOGTE<br>HAUTEUR D'OUVRANT<br>FLUGEL HOHE<br>VENT HEIGHT | H1+H2+H3-14 |

(*) OPTIONEEL
EN OPTION
FAKULTATIV
OPTIONAL

VAST ONDERDEEL
PARTIE FIXE
FESTER TEIL
FIXED PART

| | |
|---|---|
| G11 | H1-17<br>B1-69.5 |
| G12 | H2-17<br>B1-69.5 |
| G13 | H3-31<br>B1-69.5 |
| G14 | H4-45<br>B1-69.5 |
| G24 | H4-45<br>B2-55.5 |
| G34 | H4-45<br>B3-55.5 |
| G41 | H1-17<br>B4-69.5 |
| G42 | H2-17<br>B4-69.5 |
| G43 | H3-31<br>B4-69.5 |
| G44 | H4-45<br>B4-69.5 |

PRIMAIRE VLEUGEL
PREMIERE VANTAIL
GANGFLEUGEL
FIRST VENT

| | |
|---|---|
| G31 | H1-17<br>VB3-66.5 |
| G32 | H2-17<br>VB3-162.5 |
| G33 | H3-31<br>VB3-66.5 |

SECUNDAIRE VLEUGEL
DEUXIEME VANTAIL
STANDFLEUGEL
SECOND VENT

| | |
|---|---|
| G21 | H1-17<br>VB2-66.5 |
| G22 | H2-17<br>VB2-162.5 |
| G23 | H3-31<br>VB2-66.5 |

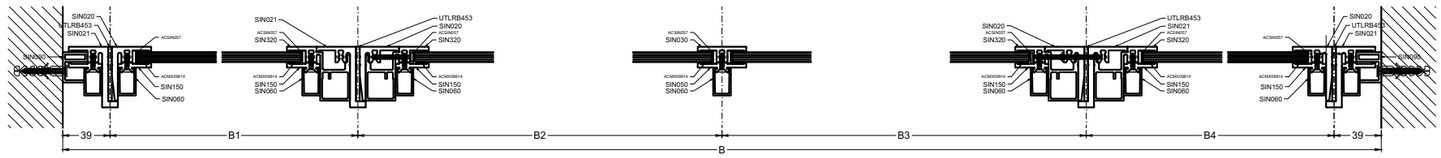


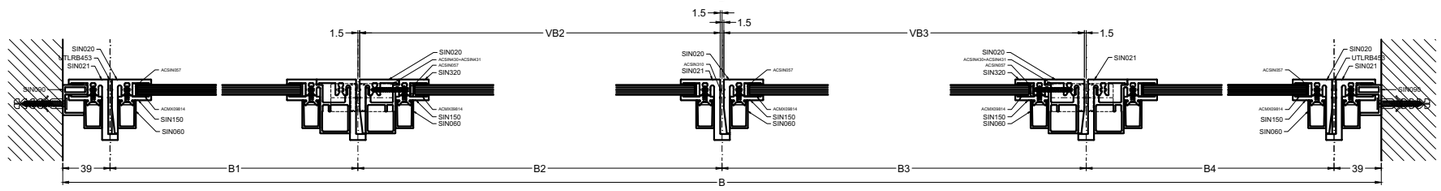


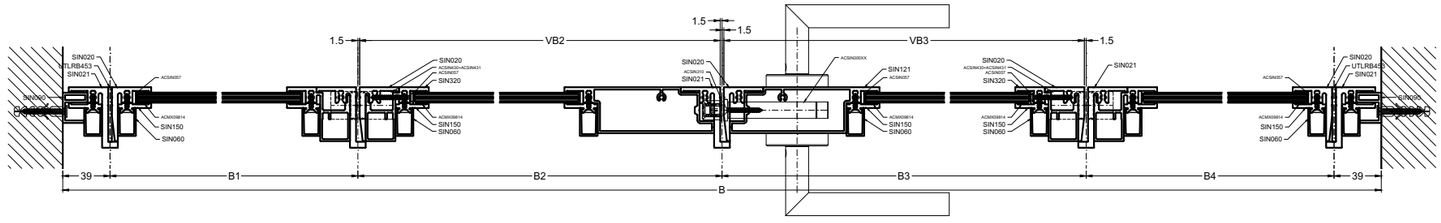


VERBORGEN002A2_SLOT

aliplast
member of
CORIALIS

ZAAGTABELLEN-COUPES ET DEBITS-ZUSCHNITTSTABELLEN-FABRICATION CHARTS

# SCHUIFDEUR001A_LOFT

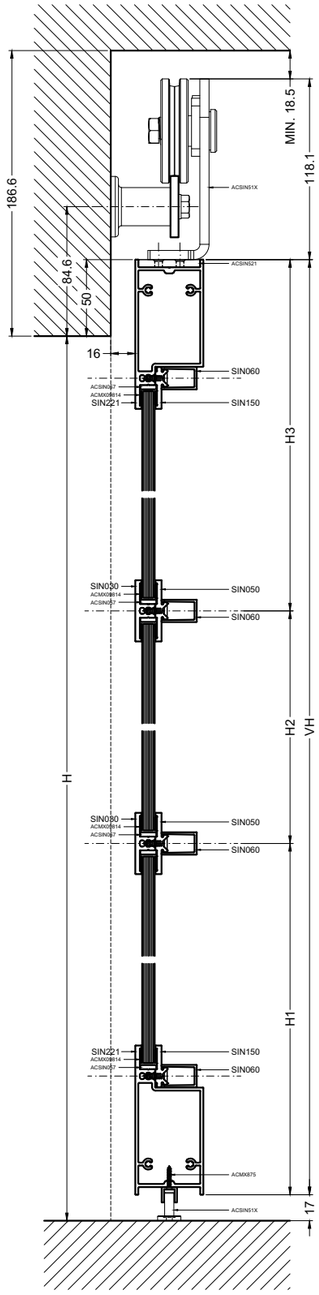


VLEUGEL
OUVRANT
FLUGEL
VENT

| | | | | |
|---|---|---|---|---|
| SIN020 | | 2 | | VH |
| SIN221 | | 2 | | VB-10 |
| SIN030 | | 2 | | VB-34 |
| SIN050 | | 2 | | VB-10 |
| SIN060 | | 2 | | VB-10 |
| SIN150 | | 2 | | H1-117.5 |
| | | 2 | | H2-40 |
| | | 2 | | H3-117.5 |
| | | 2 | | VB-10 |
| SIN060 | | 2 | | H1-92.1 |
| | | 2 | | H2-14.6 |
| | | 2 | | H3-92.1 |
| | | 2 | | VB-10 |

| | |
|---|---|
| (*) | OPTIONEEL<br>EN OPTION<br>FAKULTATIV<br>OPTIONAL |

| | | |
|---|---|---|
| O | ACSIN057 | 24 |
| | ACSIN630 | 2 |
| | ACSIN51* | 1 |

| | |
|---|---|
| B < (1920+X)/2 | ACSIN510 (2000 mm) |
| B < (2420+X)/2 | ACSIN511 (2500 mm) |
| B < (2920+X)/2 | ACSIN512 (3000 mm) |

| | |
|---|---|
| ACSIN521 | 2 |
| ACMX09814 | 2H+6B |
| ACMX09814<br>or / ou / oder / no<br>ACMX09816 | 2H+6B |

| | | |
|---|---|---|
| (*) SOFT-CLOSE | ACSIN515 | 1 |
| | ACSIN522 | 1 |
| (*) SOFT-OPEN | ACSIN515 | 1 |
| | ACSIN522 | 1 |

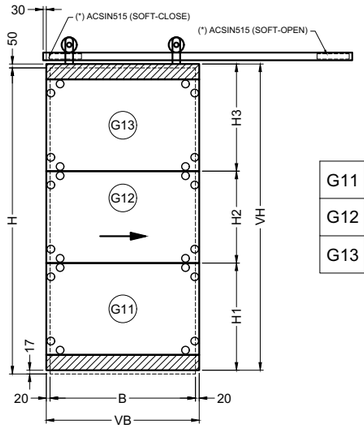


| | |
|---|---|
| G11 | H1-94.5<br>VB-42 |
| G12 | H2-17<br>VB-42 |
| G13 | H3-94.5<br>VB-42 |

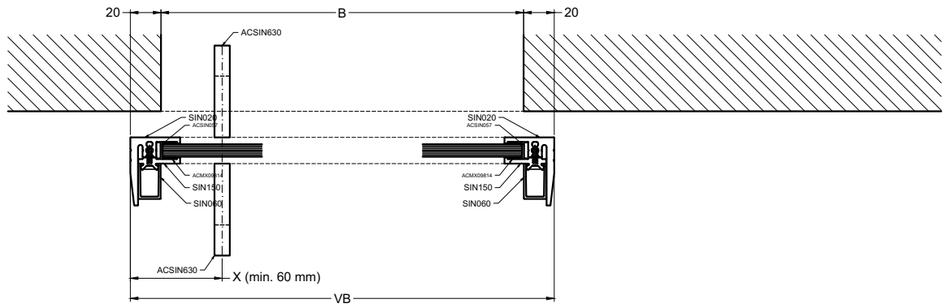


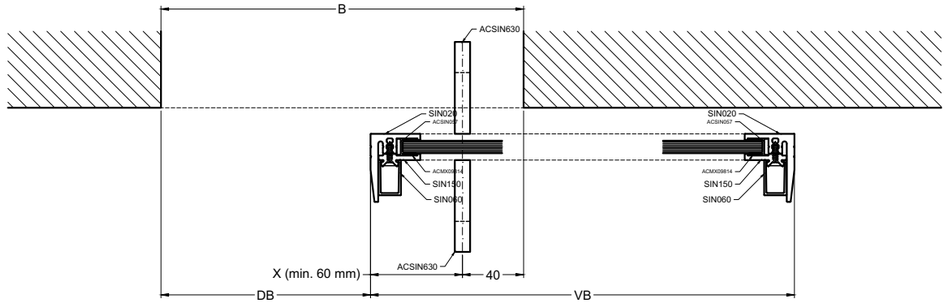


| | | | |
|---|---|---|---|
| H | DAGMAAT<br>LARGEUR TABLEAU FINI<br>LICHTE BREITE<br>CLEAR WIDTH | | |
| B | DAGMAAT<br>LARGEUR TABLEAU FINI<br>LICHTE BREITE<br>CLEAR WIDTH | | |
| X | AFSTAND HANDGREEP<br>DISTANCE POIGNEE<br>GRIFF ENTFERNUNG<br>HANDLE OFFSET | MIN. 60 MM | |
| DB | DOORGANGSBREEDTE<br>LARGEUR PASSAGE<br>DURCHGANGSBREITE<br>PASSAGE WIDTH | B-X-40 | |
| VH | VLEUGELHOOGTE<br>HAUTEUR D'OUVRANT<br>FLUGEL HOHE<br>SASH HEIGHT | H+33 | |
| VB | VLEUGELBREEDTE<br>LARGEUR VANTAIL<br>BREITE FLUGEL<br>WIDTH SASH | B+40 | |

| | | | |
|---|---|---|---|
| MAXIMAAL VLEUGELGEWICHT<br>POIDS MAXIMUM PAR VANTAIL<br>MAXIMAL FLUGELGEWICHT<br>MAX. WEIGHT OF THE VENT | | | 100 kg |
| Bmax | MAXIMAAL DAGMAAT BREEDTE<br>LARGEUR TABLEAU FINI MAXIMUM<br>MAXIMAL FLUGELBREITE<br>MAX. SASH WIDTH | ACSIN510<br>ACSIN511<br>ACSIN512 | (2000+X-80)/2<br>(2500+X-80)/2<br>(3000+X-80)/2 |

# SCHUIFDEUR001A_MODERN

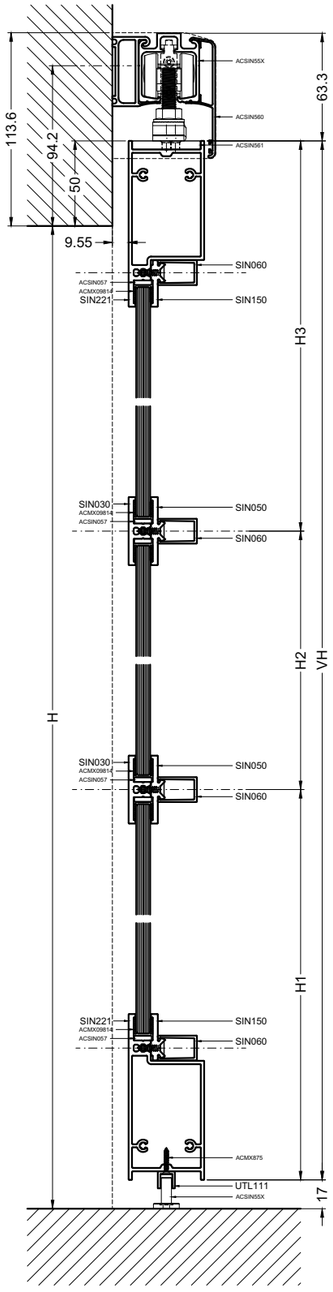


VLEUGEL
OUVRANT
FLUGEL
VENT

| | | | | |
|---|---|---|---|---|
| SIN020 | | 2 | | VH |
| SIN221 | | 2 | | VB-10 |
| SIN030 | | 2 | | VB-34 |
| SIN050 | | 2 | | VB-10 |
| SIN060 | | 2 | | VB-10 |
| SIN150 | | 2 | | H1-117.5 |
| | | 2 | | H2-40 |
| | | 2 | | H3-117.5 |
| | | 2 | | VB-10 |
| SIN060 | | 2 | | H1-92.1 |
| | | 2 | | H2-14.6 |
| | | 2 | | H3-92.1 |
| | | 2 | | VB-10 |
| UTL111 | | 1 | | VB-10 |

| | | |
|---|---|---|
| ACSIN057 | | 24 |
| ACSIN630 | | 2 |
| ACSIN55* | | 2B-X+40 |
| < 2500 mm | ACSIN551 | 1 |
| < 3000 mm | ACSIN552 | |
| ACSIN560 | | 1 |
| ACSIN561 | | 2 |
| ACMX09814 | | 2H+6B |
| ACMX09814 OF / OU / ODER / OR ACMX09816 | | 2H+6B |

| | | | |
|---|---|---|---|
| (*) | OPTIONEEL<br>EN OPTION<br>FAKULTATIV<br>OPTIONAL | | |
| (*) SOFT-CLOSE | ACSIN556 OF / OU / ODER / OR ACSIN557 | < 60 kg<br>< 100 kg | 1 |
| (*) SOFT-OPEN | ACSIN556 OF / OU / ODER / OR ACSIN557 | < 60 kg<br>< 100 kg | 1 |

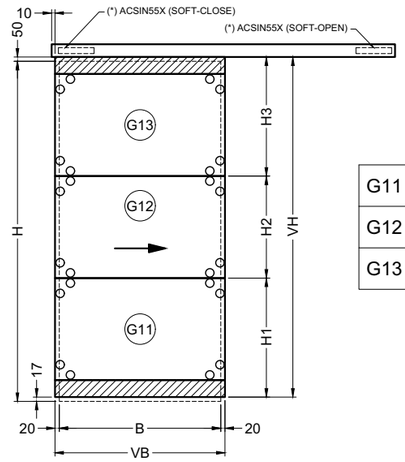


| | |
|---|---|
| G11 | H1-94.5<br>VB-42 |
| G12 | H2-17<br>VB-42 |
| G13 | H3-94.5<br>VB-42 |

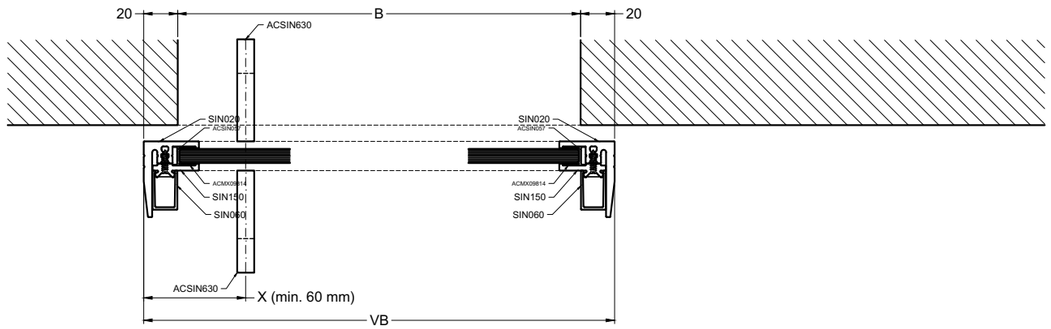


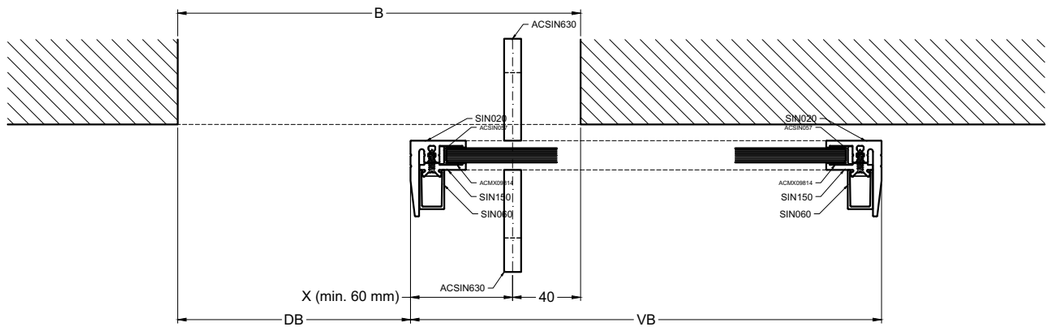


| | | | |
|---|---|---|---|
| H | DAGMAAT<br>LARGEUR TABLEAU FINI<br>LICHTE BREITE<br>CLEAR WIDTH | | |
| B | DAGMAAT<br>LARGEUR TABLEAU FINI<br>LICHTE BREITE<br>CLEAR WIDTH | | |
| X | AFSTAND HANDGREEP<br>DISTANCE POIGNEE<br>GRIFF ENTFERNUNG<br>HANDLE OFFSET | MIN. 60 MM | |
| DB | DOORGANGSBREEDTE<br>LARGEUR PASSAGE<br>DURCHGANGSBREITE<br>PASSAGE WIDTH | B-X-40 | |
| VH | VLEUGELHOOGTE<br>HAUTEUR D'OUVRANT<br>FLUGEL HOHE<br>VENT HEIGHT | H+33 | |
| VB | VLEUGELBREEDTE<br>LARGEUR VANTAIL<br>BREITE FLUGEL<br>WIDTH SASH | B+40 | |

| | | | |
|---|---|---|---|
| | MAXIMAAL VLEUGELGEWICHT<br>POIDS MAXIMUM PAR VANTAIL<br>MAXIMAL FLUGELGEWICHT<br>MAX. WEIGHT OF THE VENT | | 100 kg |
| Bmax | MAXIMAAL DAGMAAT BREEDTE<br>LARGEUR TABLEAU FINI MAXIMUM<br>MAXIMAL FLUGELBREITE<br>MAX. SASH WIDTH | ACSIN551<br>ACSIN552 | (2500+X-40)/2<br>(3000+X-40)/2 |

aliplast
member of
CORIALIS

BEGLAZINGSTABEL
TABLEAU DE VITRAGE
VERGLASUNGSTABELLE
GLAZING TABLE

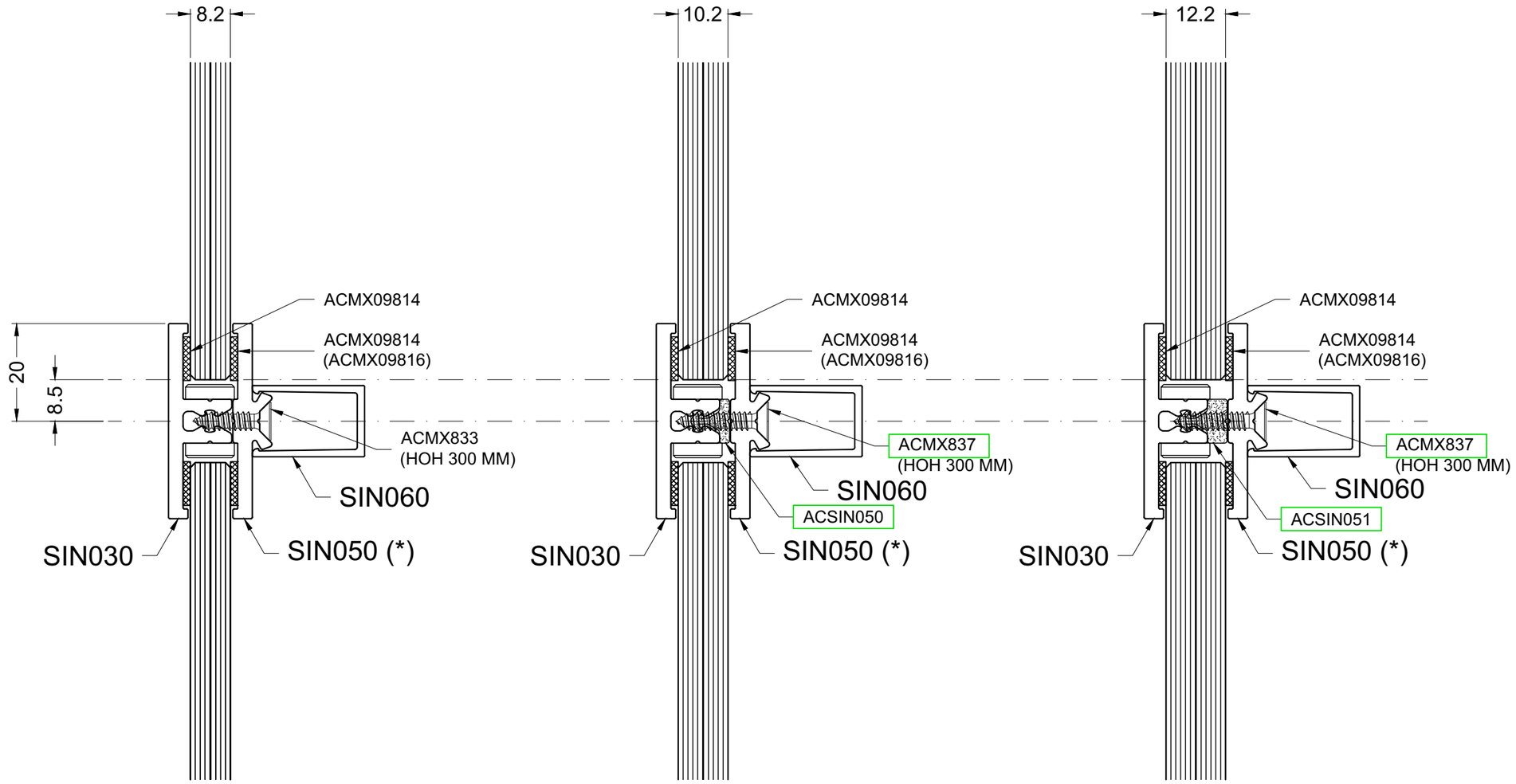


REINIGEN EN ONTVETTEN VAN GLAS- EN PROFIELOPPERVLAK
RINCER ET DEGRAISSER LA SURFACE DU VERRE ET DU PROFILE
REINIGEN UND ENTFETTEN DER GLAS- UND PROFILEOBERFLACHE
CLEANING AND DEGREASING OF GLASS AND PROFILE SURFACE

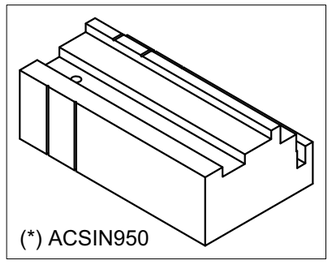


ALIPLAST GARANDEERT DE KWALITEIT VAN DE GELEVERDE PROFIELEN & TOEBEHOREN. DE KWALITEIT EN HET TESTEN VAN DE HECHTING ZIJN DE VERANTWOORDELIJKHEID VAN DE FABRIKANT.
ALIPLAST GARANTIT LA QUALITE DES PROFILES & ACCESSOIRES LIVRES. LA QUALITE ET L'ESSAI DE L'ADHESION SONT LA RESPONSABILITE DU FABRICANT.
ALIPLAST GARANTIERT DIE QUALITÄT DER GELIEFERTEN PROFILE UND ZUBEHORTEILE. DIE QUALITÄT UND DIE PRÜFUNG DER HAFTUNG SIND DIE VERANTWORTUNG DES HERSTELLERS.
ALIPLAST GUARANTEES THE QUALITY OF THE DELIVERED PROFILES AND ACCESSORIES. THE QUALITY AND TESTING OF THE ADHESION IS THE SOLE RESPONSIBILITY OF THE MANUFACTURER.

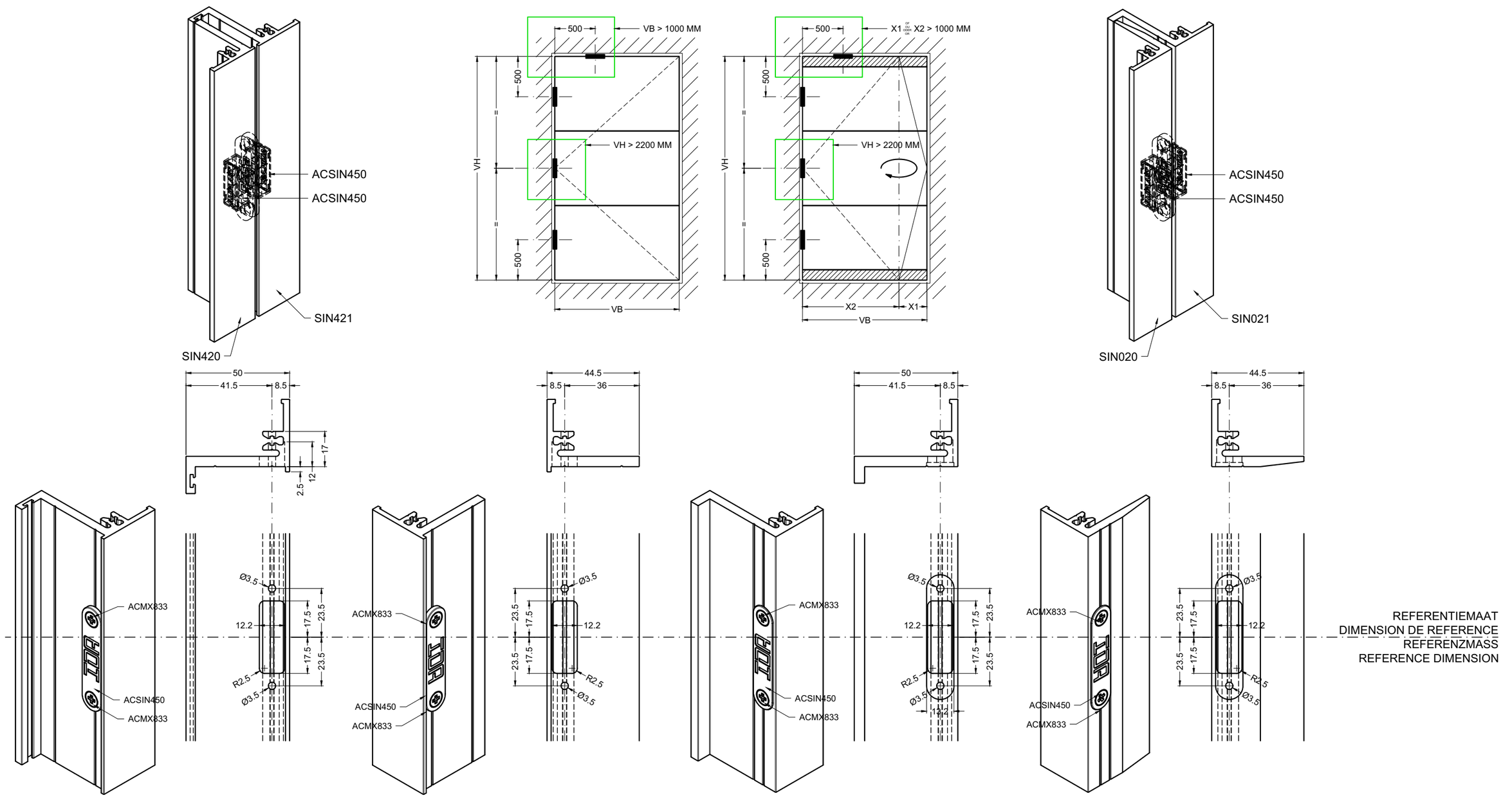


MONTAGE ACSIN450

VERSTEVIGINGSPROFIEL
PROFILE DE RENFORCEMENT
VERSTAERKUNGSPROFIL
REINFORCEMENT PROFILE

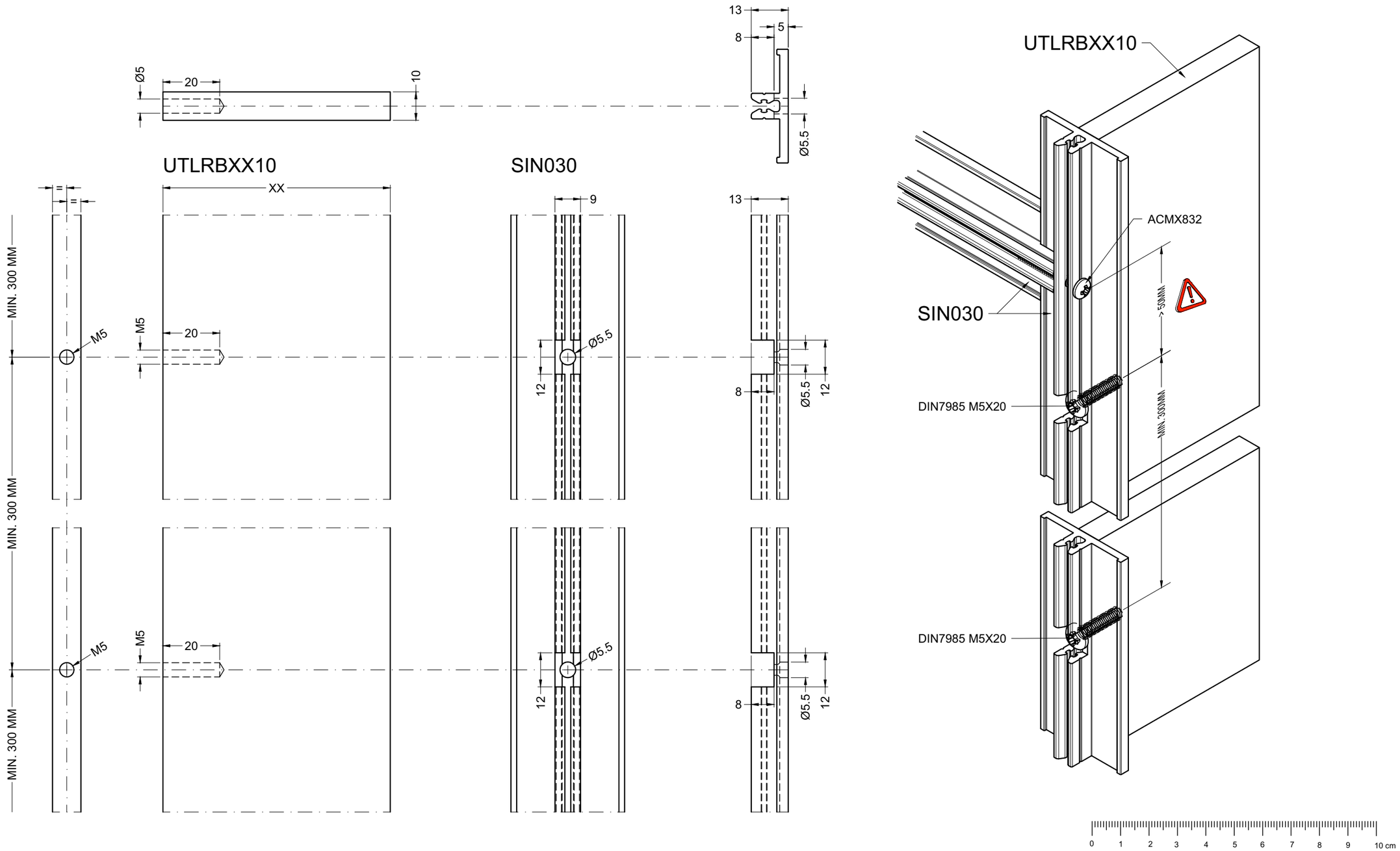


MONTAGE VERSTEVIGING_1

aliplast member of CORIALIS

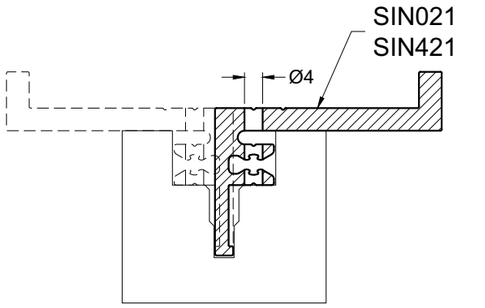
SIN021
SIN421
Ø4

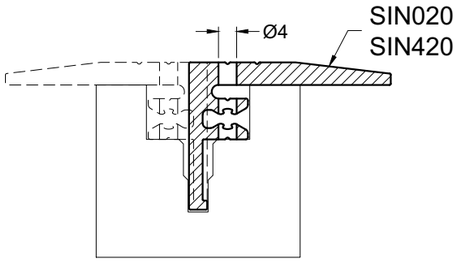
Ø4
SIN020
SIN420

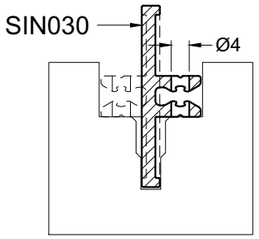
SIN030
Ø4

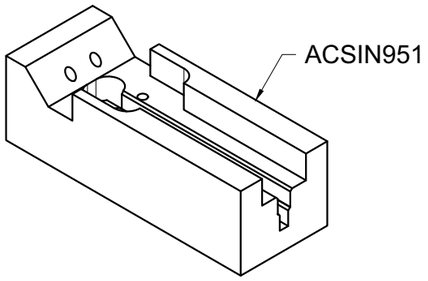
ACSIN951

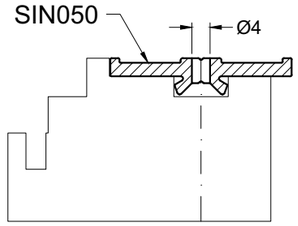
SIN050
Ø4

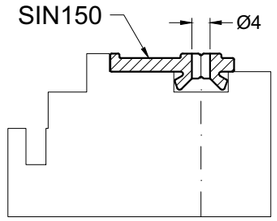
SIN150
Ø4

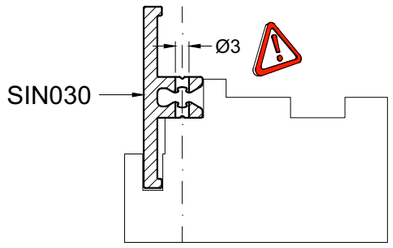
Ø3
SIN030

ACSIN030

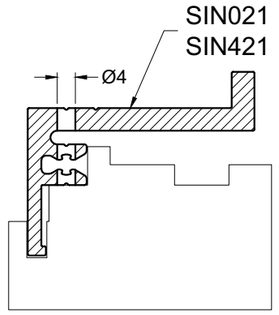
SIN021
SIN421
Ø4

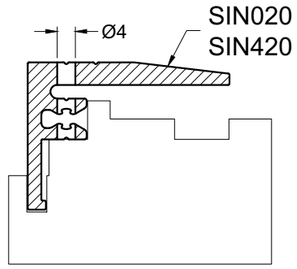
Ø4
SIN020
SIN420

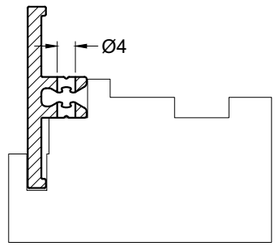
Ø4

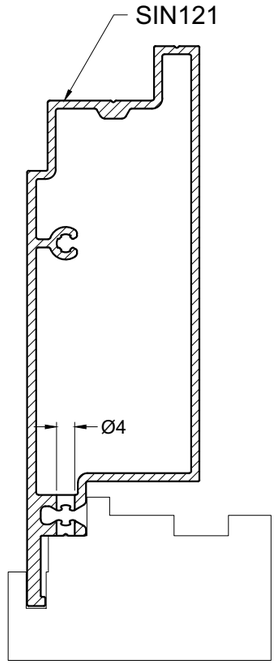
SIN121
Ø4

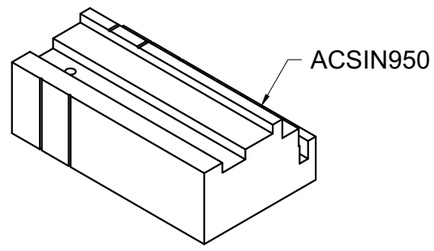
ACSIN950

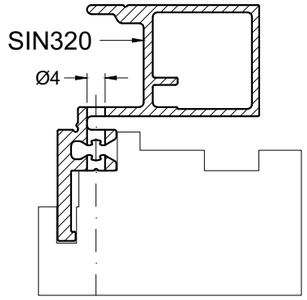
SIN320
Ø4

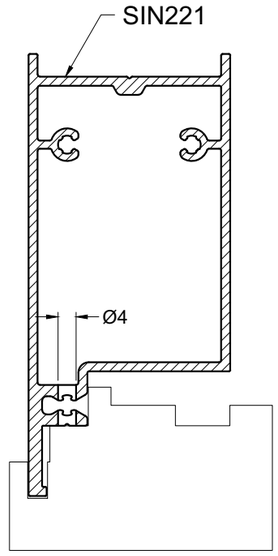
SIN221
Ø4

0
1
2
3
4
5
6
7
8
9
10 cm

T-VERBINDING
RACCORDEMENT-T
T-VERBINDUNG
T-CONNECTION

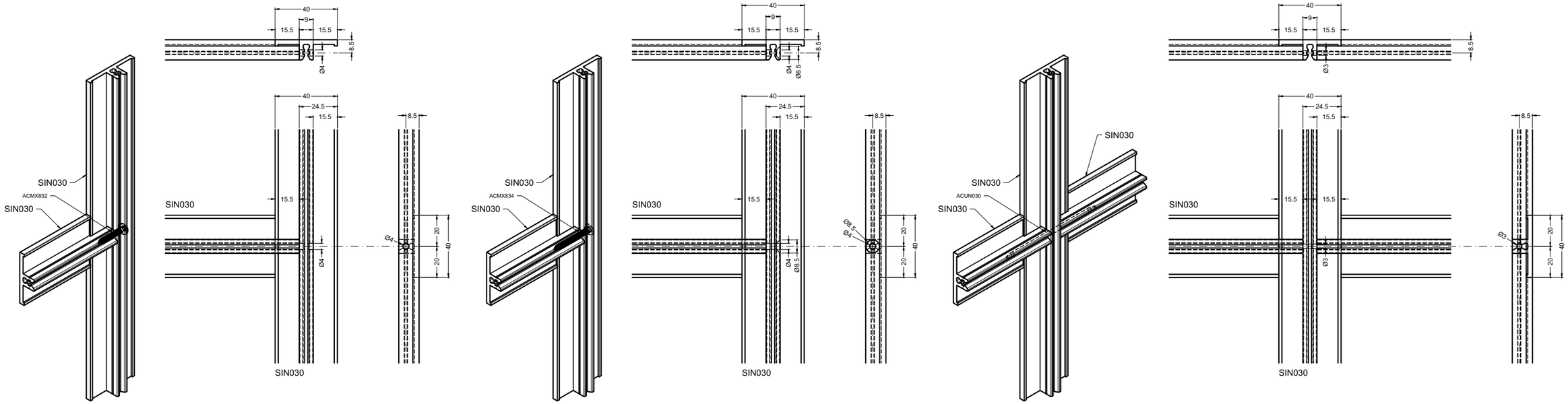


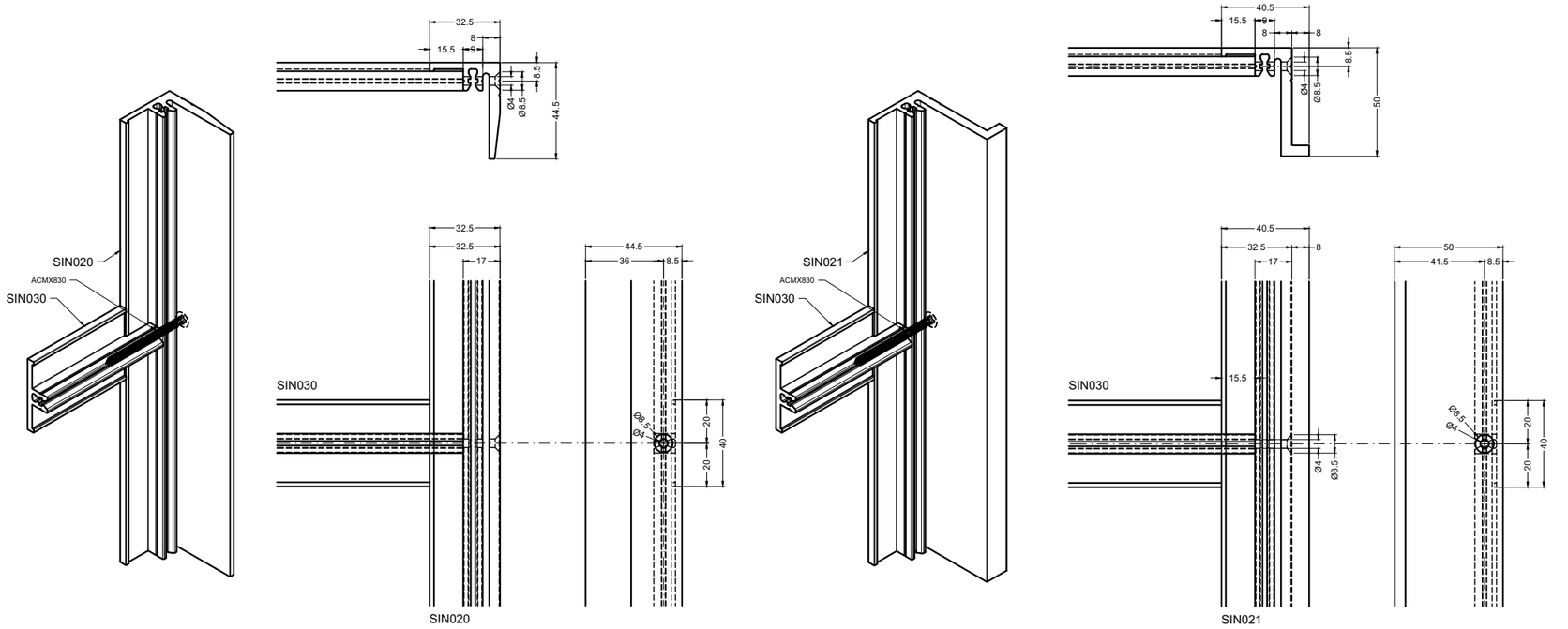


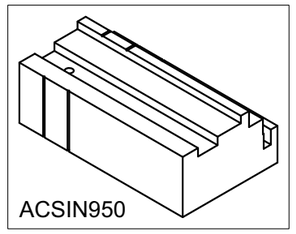


MONTAGE T001

aliplast
member of
CORIALIS

WERKTEKENINGEN - DESSINS DE CONSTRUCTION - KONSTRUKTIONZEICHNUNGEN - CONSTRUCTION DRAWINGS

L-VERBINDING
RACCORDEMENT-L
L-VERBINDUNG
L-CONNECTION

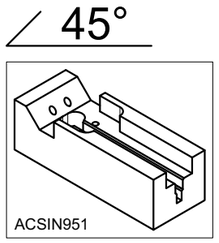


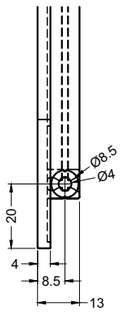


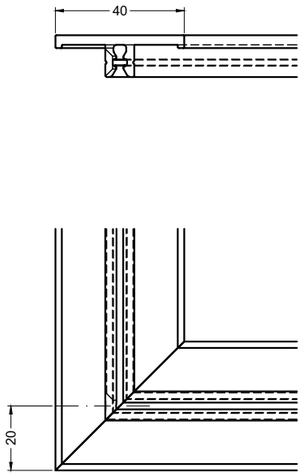


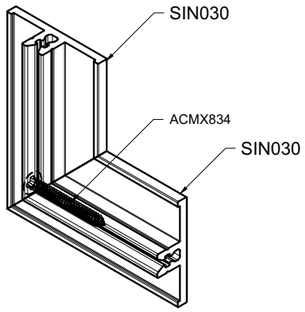


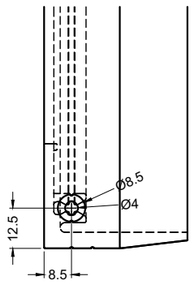


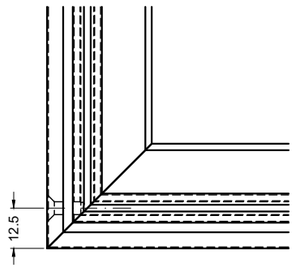


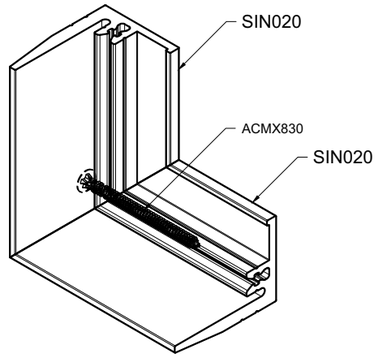


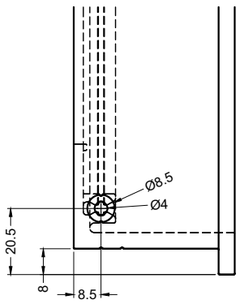


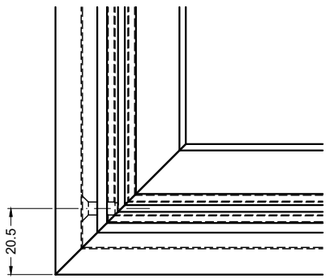


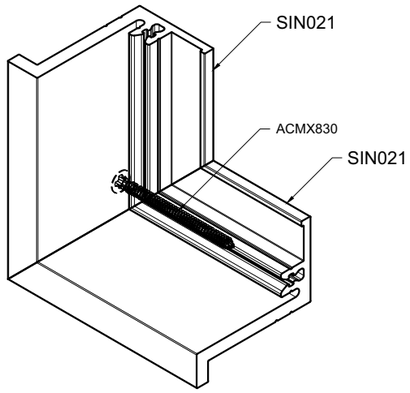


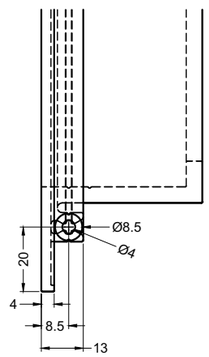


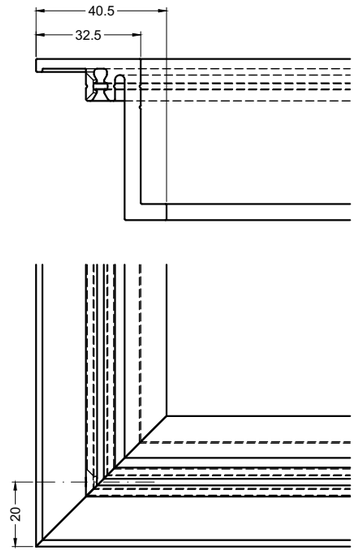


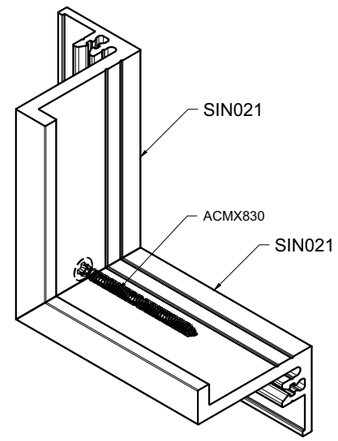

MONTAGE L001

# 90°

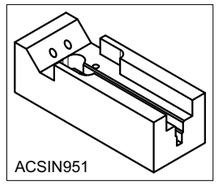


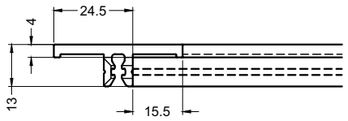


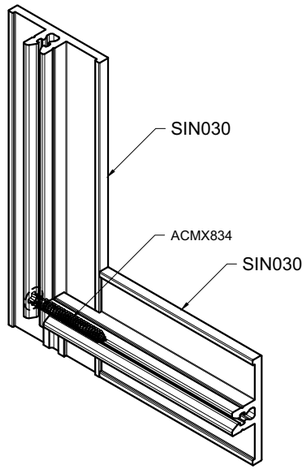


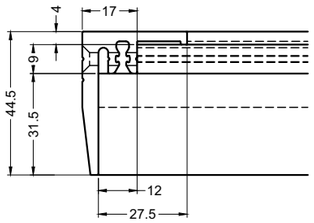


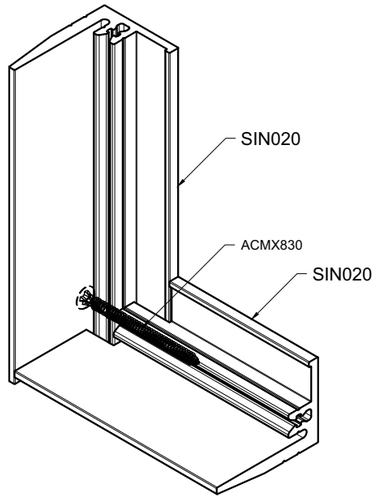


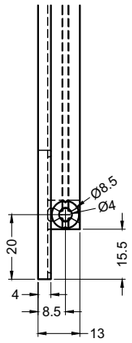


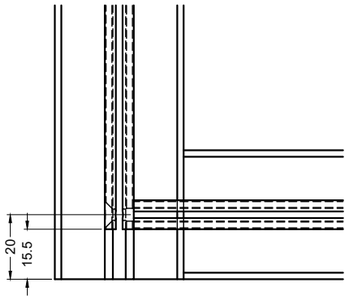


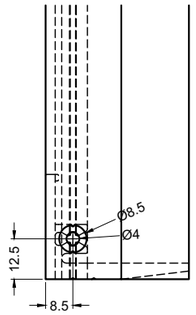


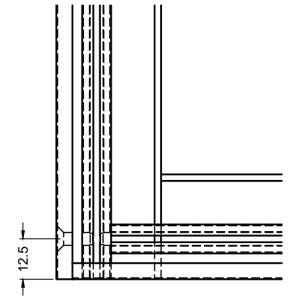


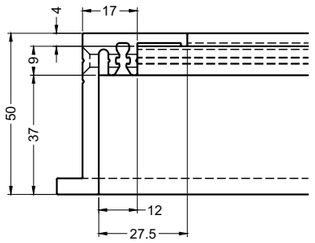


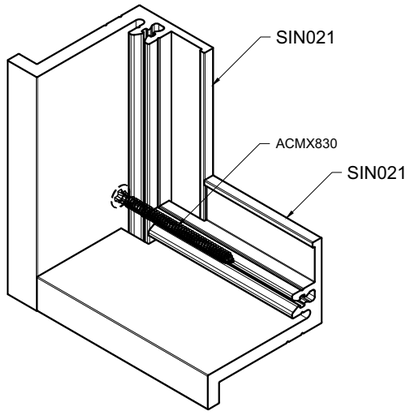


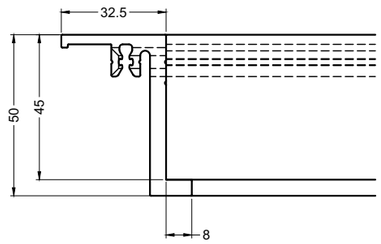


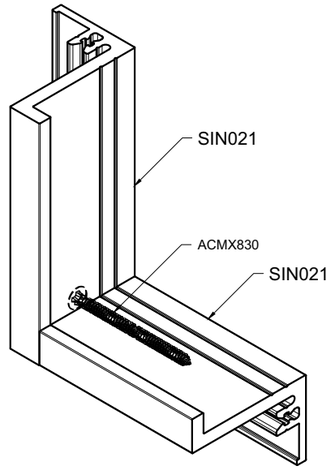


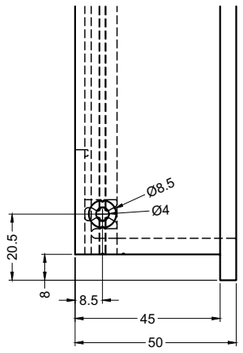


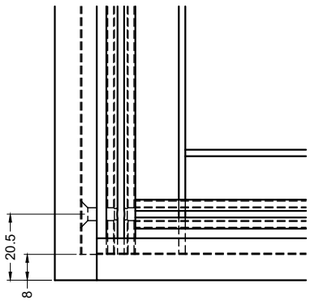


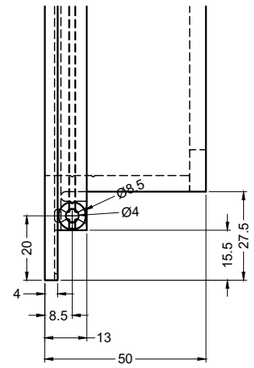

MONTAGE L002

aliplast member of CORIALIS

OVERZICHT INBOUW
APERCU MONTAGE
UEBERSICHT BEFESTIGUNG
OVERVIEW FITTING

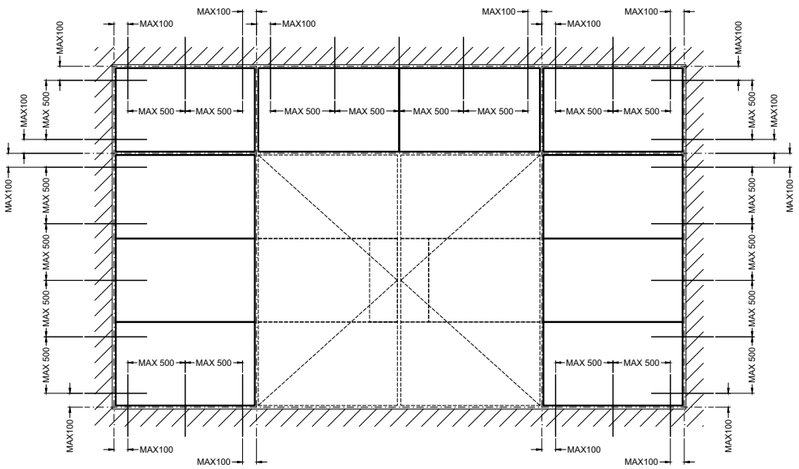


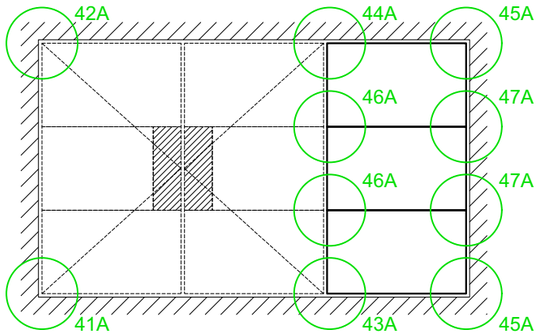


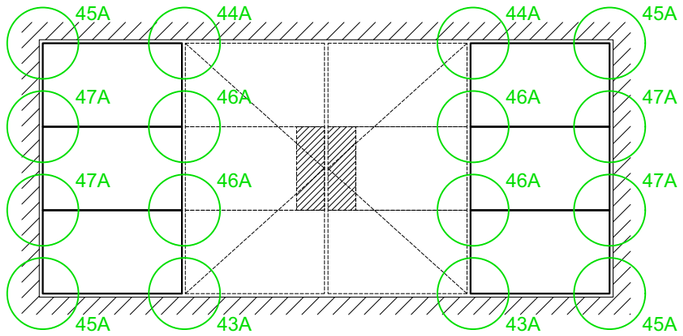


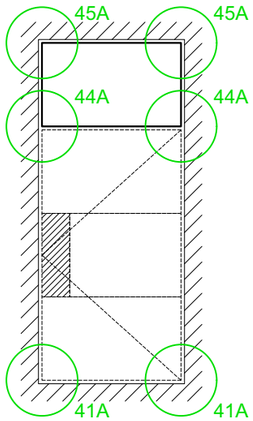


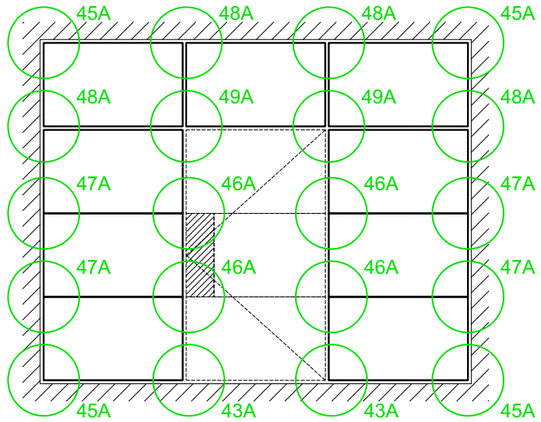


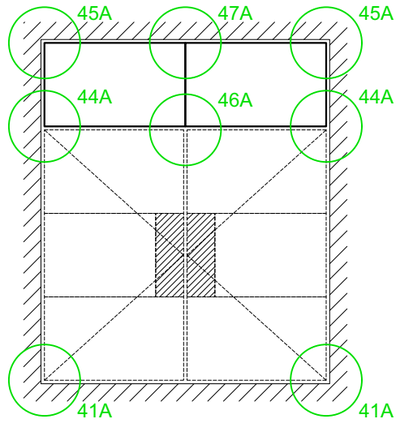


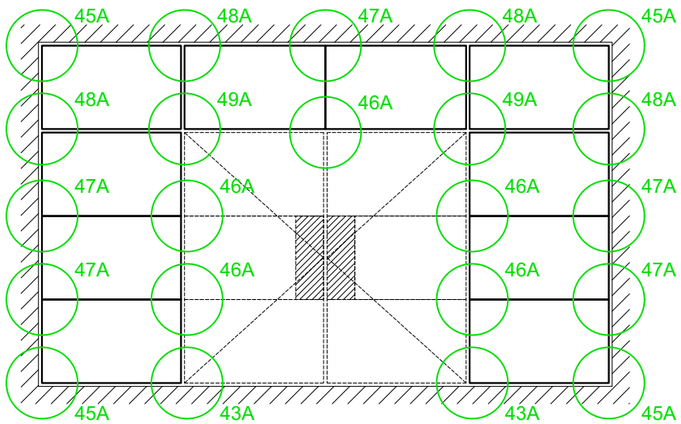


**Inbouw in de ruwbouw**
De bevestiging aan de ruwbouw gebeurt ofwel rechtstreeks doorheen de profielen met bijvoorbeeld schroeven en pluggen, ofwel met behulp van bevestigingsankers.
- De bevestigingen mogen niet minder dan 40 mm van de wand van de ruwbouw worden aangebracht.
- De verankering mag geenszins het draagvermogen van de aangrenzende bouwonderdelen beïnvloeden.
- Alle verankeringen, voor zover niet uit aluminium of roestvrij staal, dienen afdoende tegen corrosie te zijn beschermd en mogen zelf ook geen aantasting van het aluminium veroorzaken.
- Er dienen aan alle zijden minstens 2 bevestigingen aangebracht te worden met een maximale afstand tot de hoek van 100 mm. De afstand van de bevestigingen onderling bedraagt maximum 500 mm.
- Op de plaatsen waar een tussenregel of tussenstijl op de zijstijl, boven- of onderregel aansluit, moet de verankering op maximum 100 mm naast de stijl- of regelaansluiting worden aangebracht.

**Montage dans le gros oeuvre**
La fixation au gros oeuvre se fait soit directement à travers les profiles avec par exemple des vis et des chevilles, soit à l'aide d'ancrages de fixation.
- Les fixations ne peuvent pas être appliquées à une distance inférieure à 40 mm du mur du gros oeuvre.
- L'ancrage ne peut surtout pas influencer la force portante des éléments de construction contigus.
- Tous les ancrages, pour autant qu'ils ne soient pas en aluminium ou en acier inoxydable, doivent être efficacement protégés contre la corrosion et ne peuvent pas corroder l'aluminium.
- De tous les côtés il doit y avoir au moins 2 fixations avec une distance maximale jusqu'à l'angle de 100 mm. La distance entre les fixations est de 500 mm au maximum.
- A l'endroit ou des profils T et des profils dormants se rencontrent, l'ancrage doit être appliqué à une distance maximale de 100 mm des deux côtés de profile T.
De cette façon, une dilatation ou un rétrécissement du profile T (dus aux fluctuations de température) sont possibles sans dégâts.

**Befestigung am Baukörper**
Die Befestigung am Baukörper erfolgt durch systemabhängige Befestigungsanker, Rohrrahmendübel oder andere Befestigungsteile.
- Beim Einsatz von Schrauben und Dübeln ist zu gewährleisten, dass die Mindestrandabstände 40 mm gemäß den Verarbeitungsrichtlinien der Befestigungshersteller eingehalten werden.
- Verankerungen sollen aus Aluminium oder Edelstahl bzw. korrosionsgeschützt sein, damit die Aluminiumprofile nicht angegriffen werden.
- Rahmenseite müssen mind. zwei Befestigungen eingebracht werden. Der max. Abstand zur Rahmenecke darf 100 mm nicht unterschreiten. Der max. Abstand der Befestigungspunkte untereinander darf 500 mm nicht unterschreiten.
- Im Bereich von Pfosten- und Riegelanschluss sind die Befestigungspunkte ebenfalls 100 mm aus der Ecke vorzunehmen. Es wird empfohlen, die Befestigungspunkte in den Bereich der Eck- und Scherenlager.

**Fitting in the structural work**
The fixing to the structural work is done either directly through the profiles by means of for instance screws and plugs, or by means of fixing lugs.
- The fixings may not be applied less than 40 mm of the wall of the structural work.
- The anchoring may in no way influence the bearing power of the adjacent building parts.
- All anchoring, as far as they are not made of Aluminum or stainless steel, should be adequately corrosion protected and may not attack the Aluminum themselves.
- At least two fixings should be applied on all sides; the maximum distance to the corner is at least 100 mm. The distance between the fixings is maximum 500 mm.
- Where transom/mullions and outer frame profiles meet, the fixing must be applied maximum 100 mm from both sides of the transom/mullion.

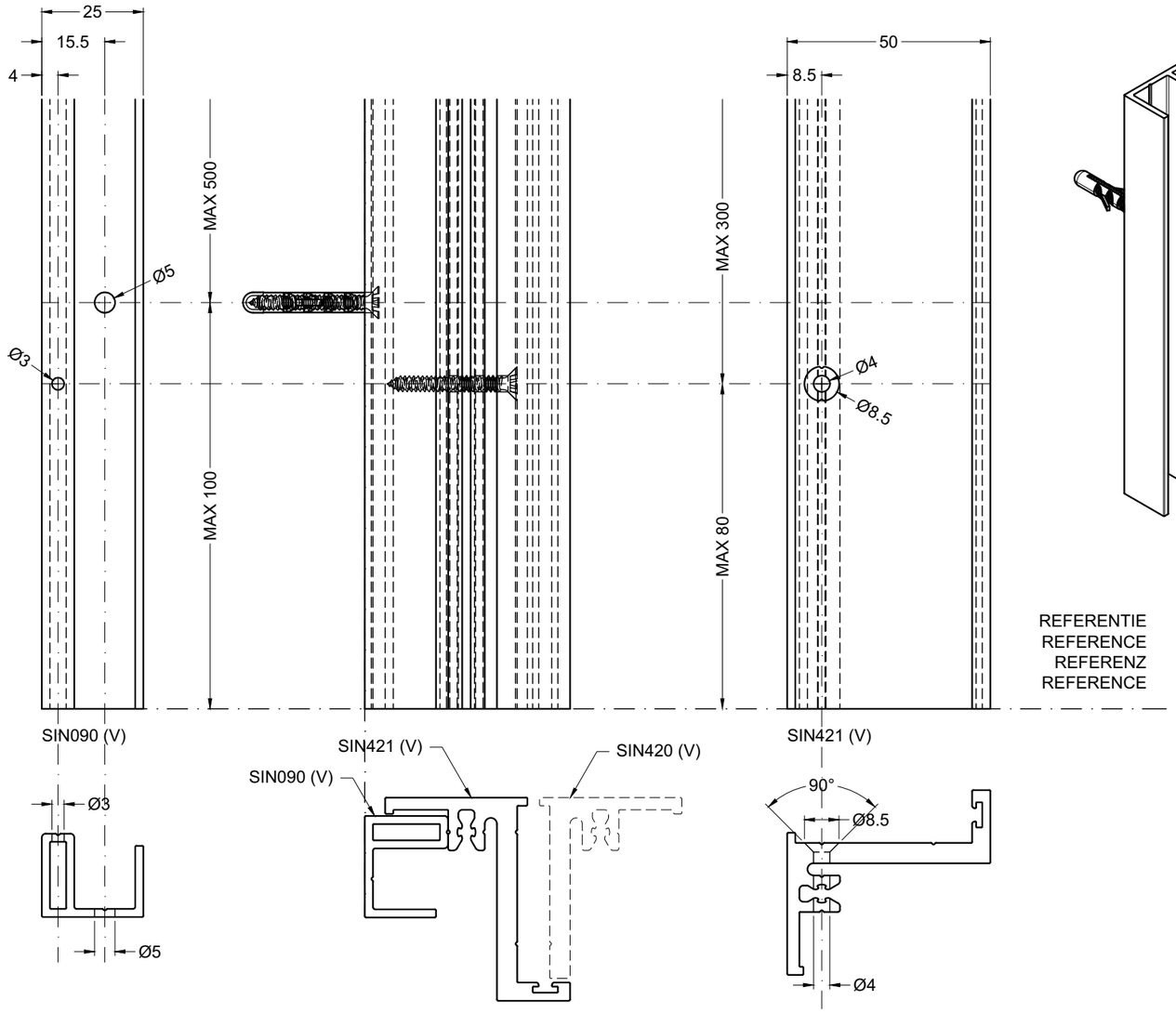


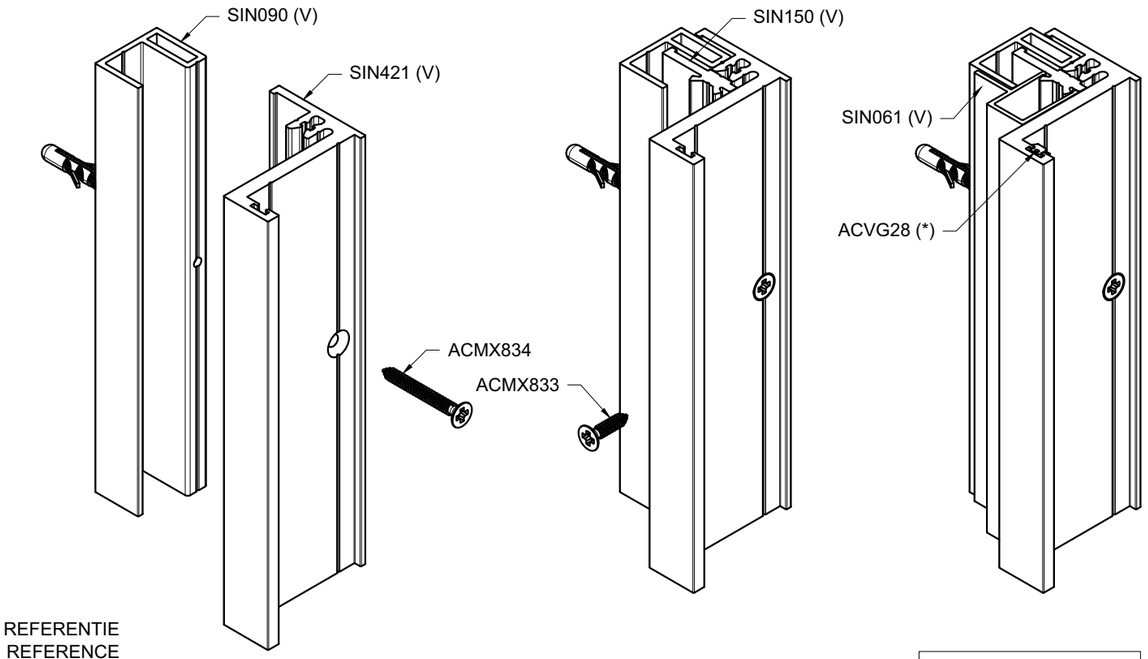


(V) VERTICAAL
VERTICALEMENT
VERTIKAL
VERTICAL

(H) HORIZONTAAL
HORIZONTALEMENT
HORIZONTAL
HORIZONTAL

(*) OPTIONEEL
EN OPTION
FAKULTATIV
OPTIONAL

0 1 2 3 4 5 6 7 8 9 10 cm

DETAIL-41A

aliplast member of CORIALIS

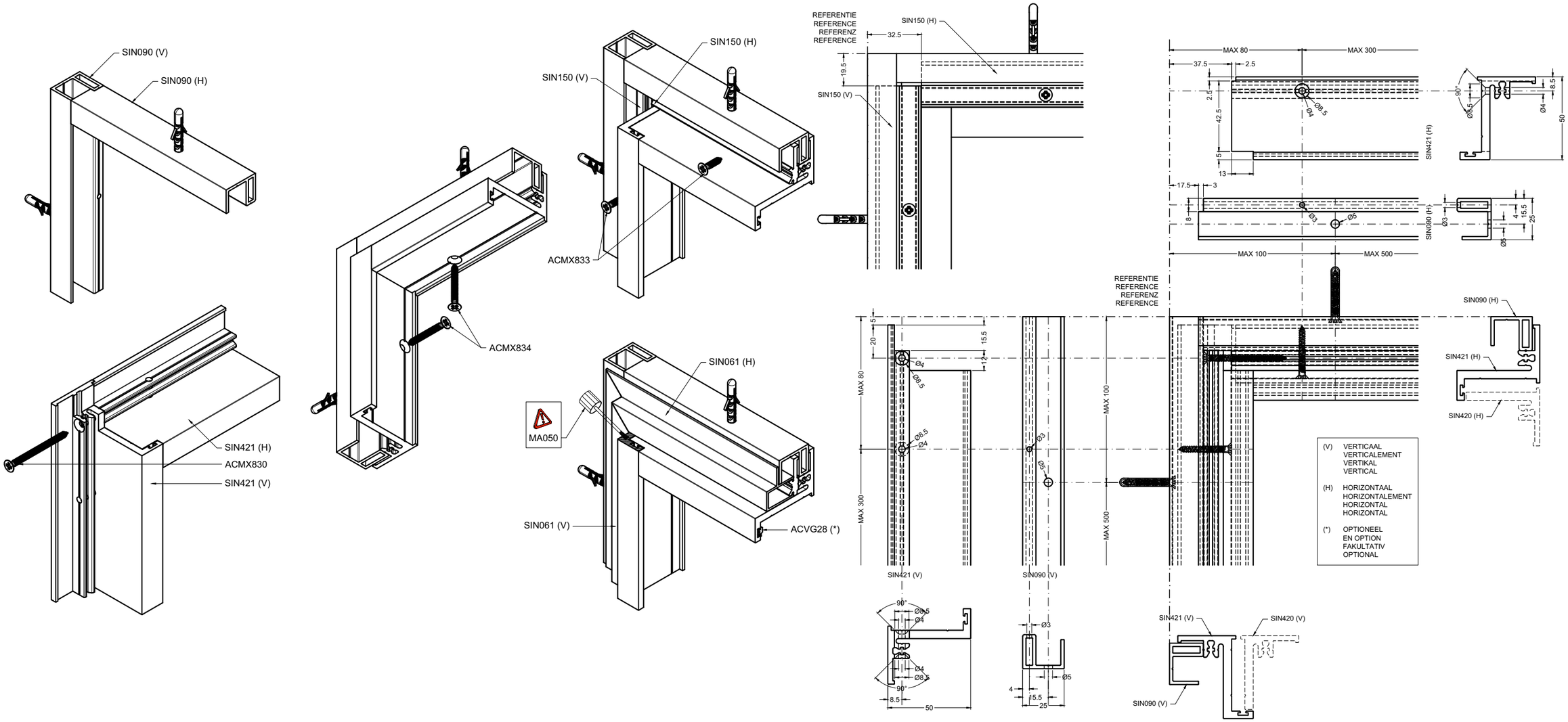
SIN090 (V)
SIN090 (H)
SIN421 (H)
ACMX830
SIN421 (V)
ACMX834
SIN150 (V)
SIN150 (H)
ACMX833
MA050
SIN061 (H)
SIN061 (V)
ACVG28 (*)
REFERENTIE
REFERENCE
REFERENZ
REFERENCE
32.5
19.5
MAX 80
MAX 300
37.5
2.5
42.5
5
13
17.5
3
8
MAX 100
MAX 500
SIN421 (H)
SIN090 (H)
SIN420 (H)
SIN421 (V)
SIN090 (V)
SIN420 (V)
20
15.5
12
Ø4
Ø8.5
Ø3
Ø5
90°
8.5
50
4
25
(V) VERTICAAL
VERTICALEMENT
VERTIKAL
VERTICAL
(H) HORIZONTAAL
HORIZONTALEMENT
HORIZONTAL
HORIZONTAL
(*) OPTIONEEL
EN OPTION
FAKULTATIV
OPTIONAL

DETAIL-42A

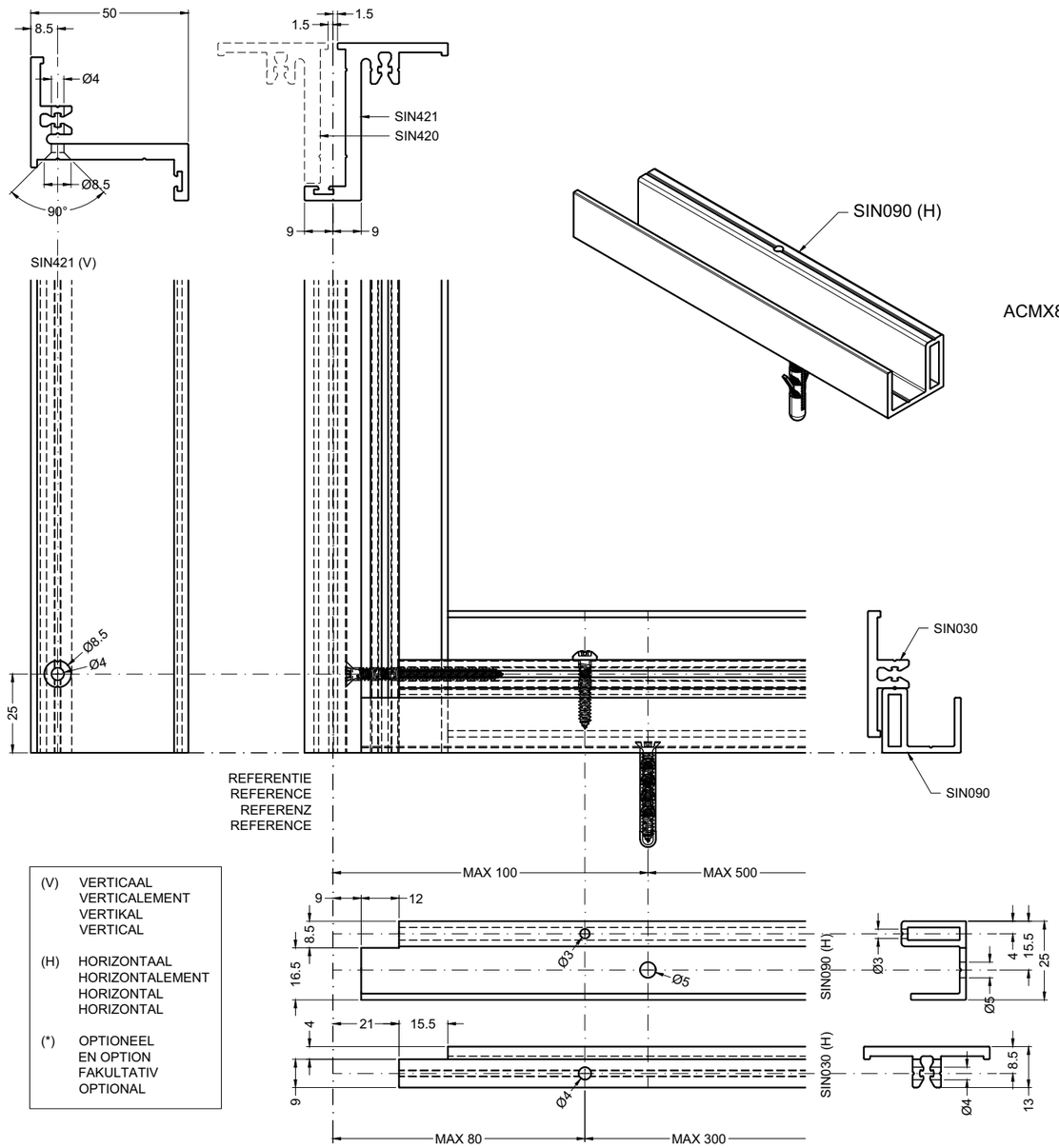


(V) VERTICAAL
VERTICALEMENT
VERTIKAL
VERTICAL

(H) HORIZONTAAL
HORIZONTALEMENT
HORIZONTAL
HORIZONTAL

(*) OPTIONEEL
EN OPTION
FAKULTATIV
OPTIONAL

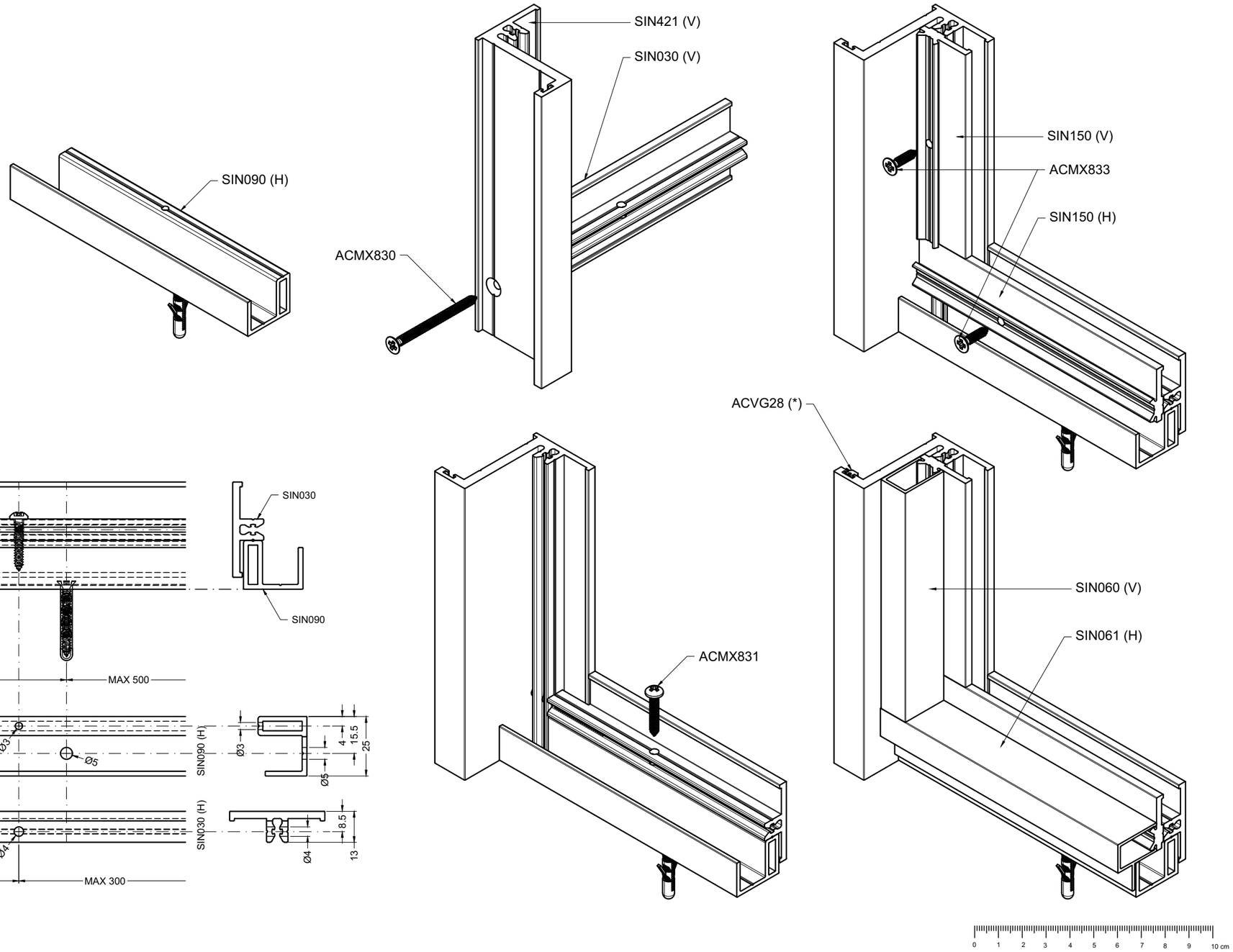


DETAIL-43A

aliplast member of CORIALIS

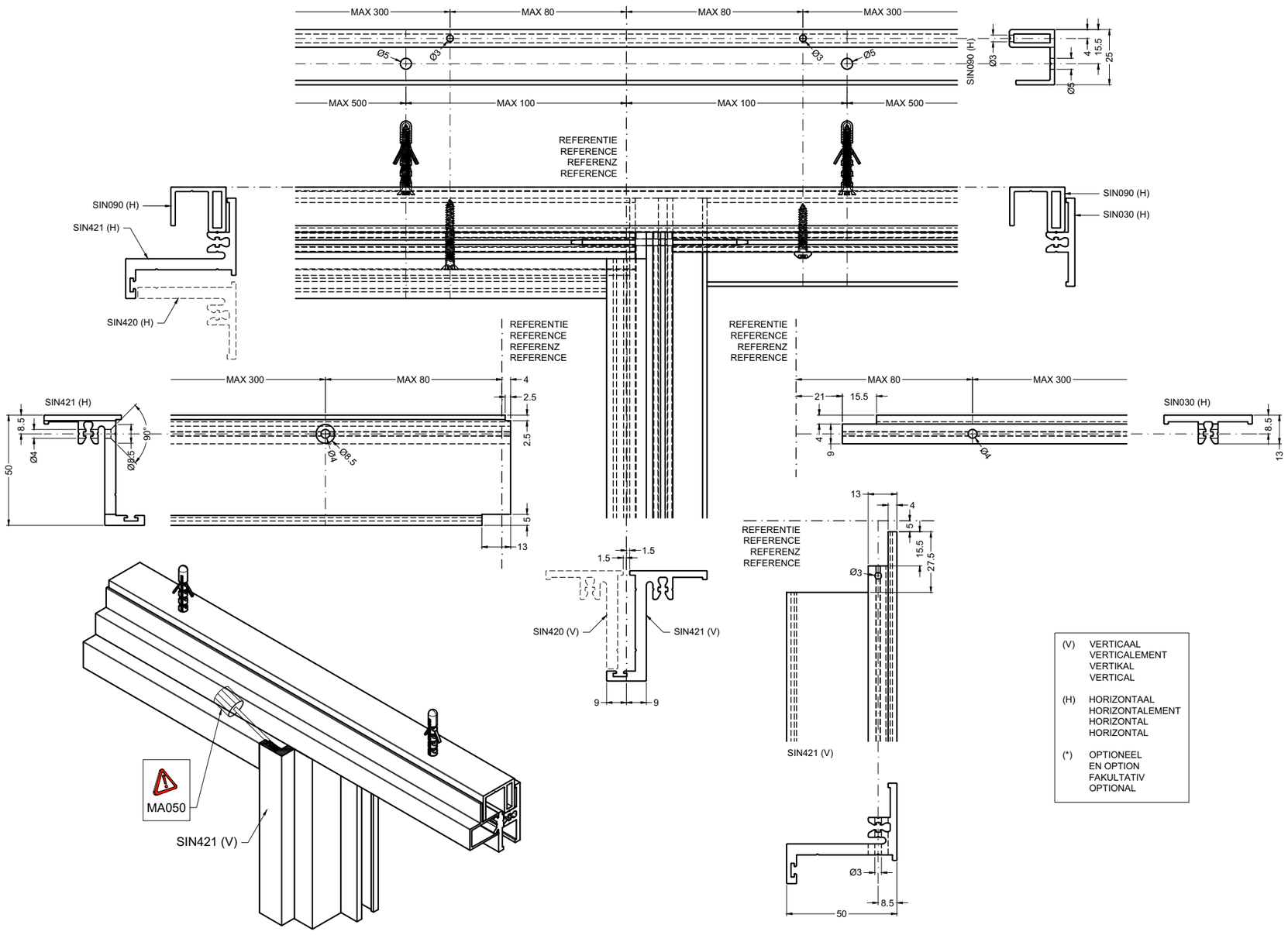


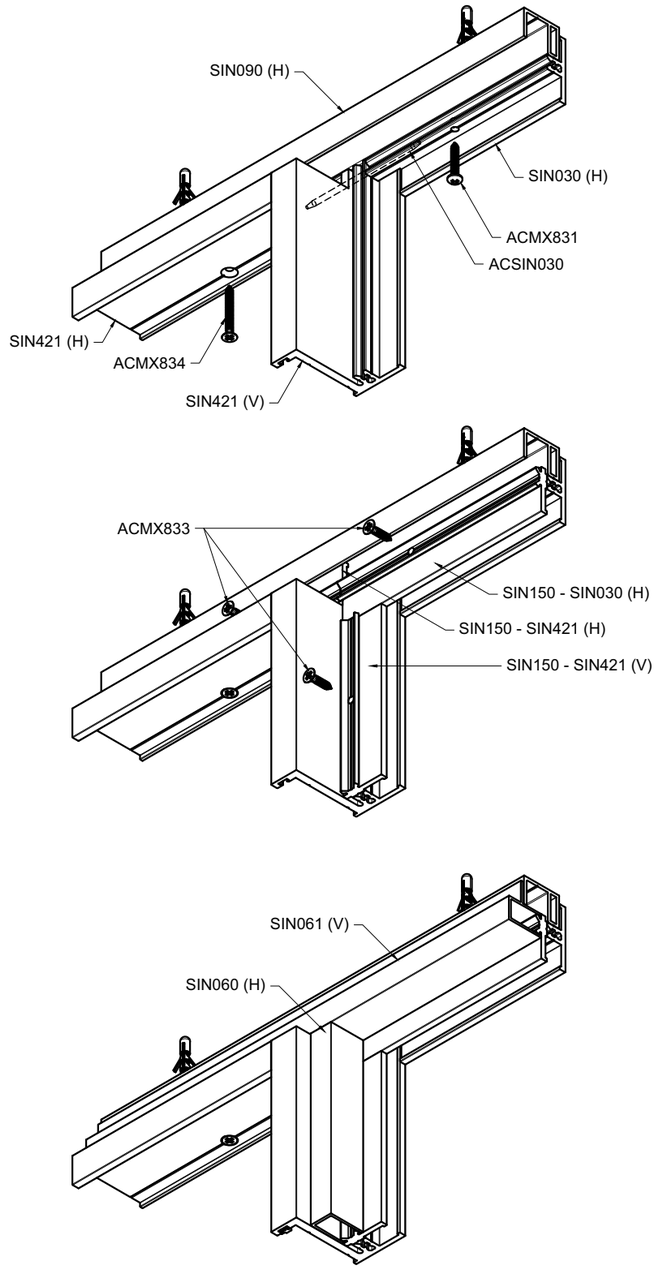


(V) VERTICAAL
VERTICALEMENT
VERTIKAL
VERTICAL

(H) HORIZONTAAL
HORIZONTALEMENT
HORIZONTAL
HORIZONTAL

(*) OPTIONEEL
EN OPTION
FAKULTATIV
OPTIONAL

DETAIL-44A

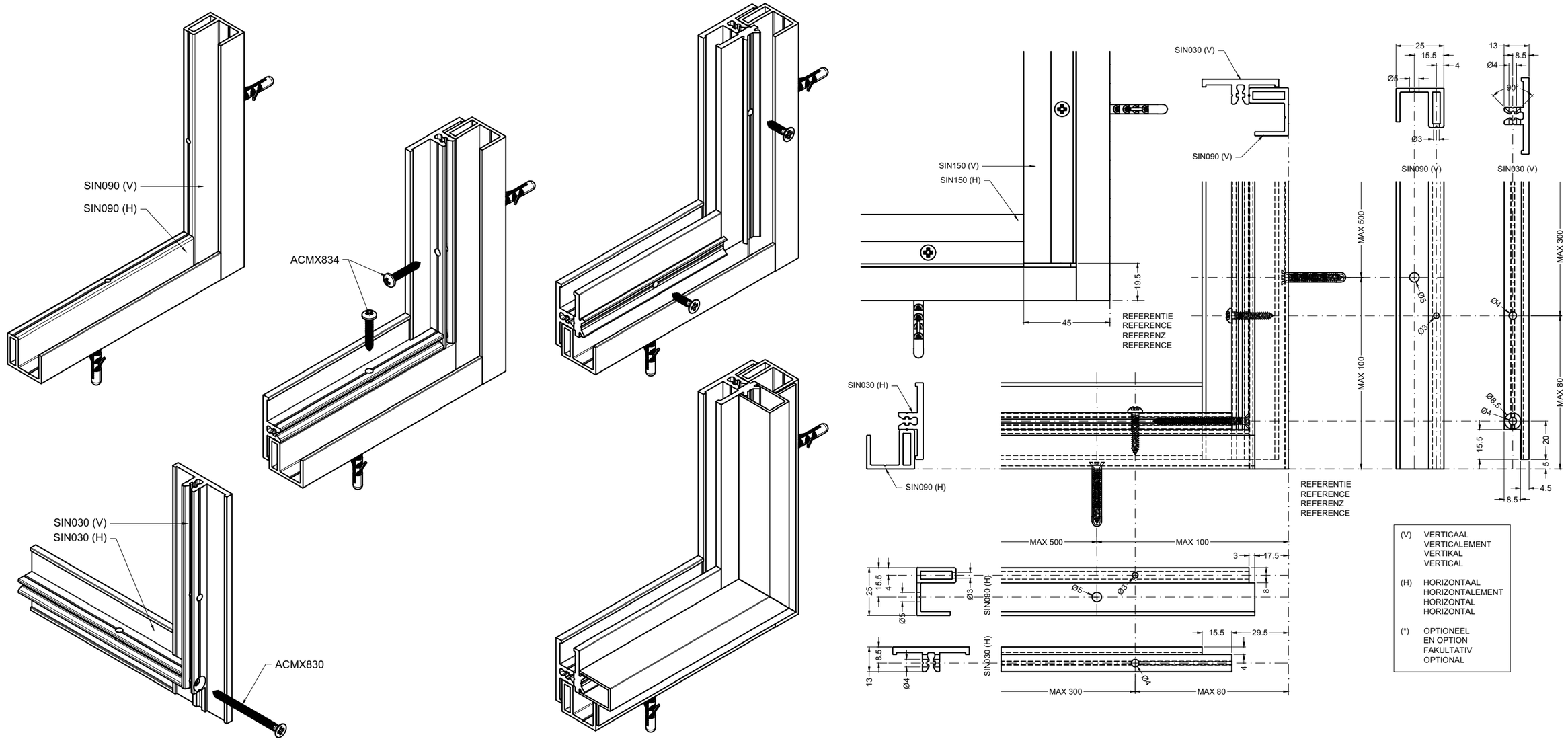
SIN090 (V)
SIN090 (H)
ACMX834
SIN030 (V)
SIN030 (H)
ACMX830
SIN150 (V)
SIN150 (H)
SIN030 (V)
SIN090 (V)
SIN030 (H)
SIN090 (H)
REFERENTIE
REFERENCE
REFERENZ
REFERENCE
MAX 500
MAX 100
MAX 300
MAX 80
(V) VERTICAAL
VERTICALEMENT
VERTIKAL
VERTICAL
(H) HORIZONTAAL
HORIZONTALEMENT
HORIZONTAL
HORIZONTAL
(*) OPTIONEEL
EN OPTION
FAKULTATIV
OPTIONAL

DETAIL-45A

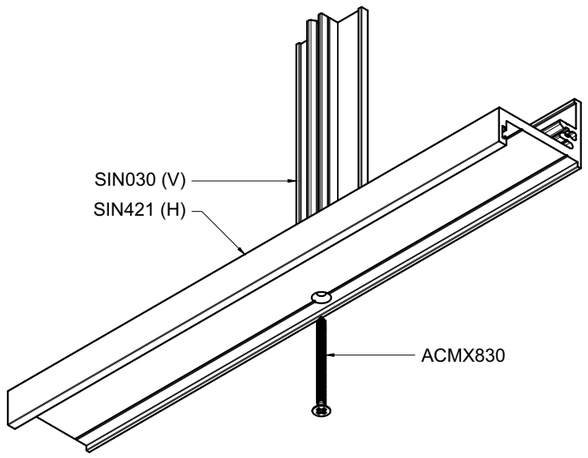


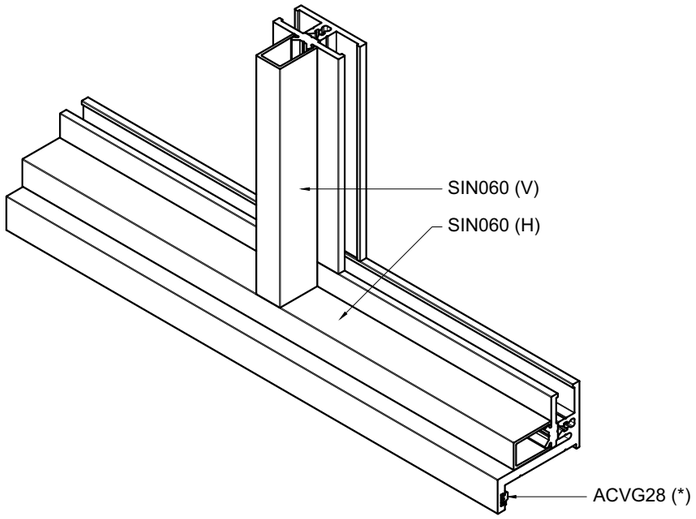


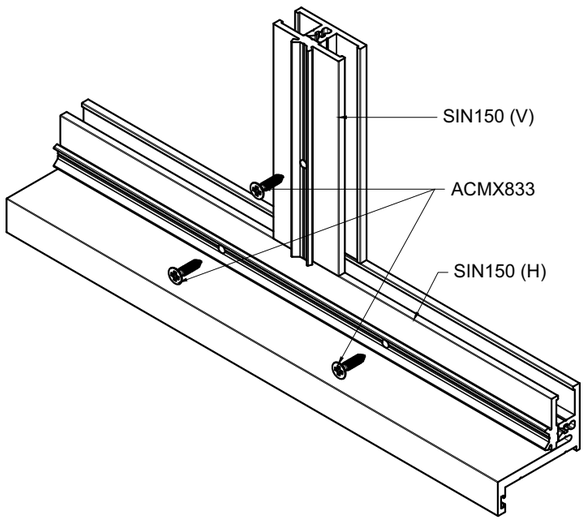


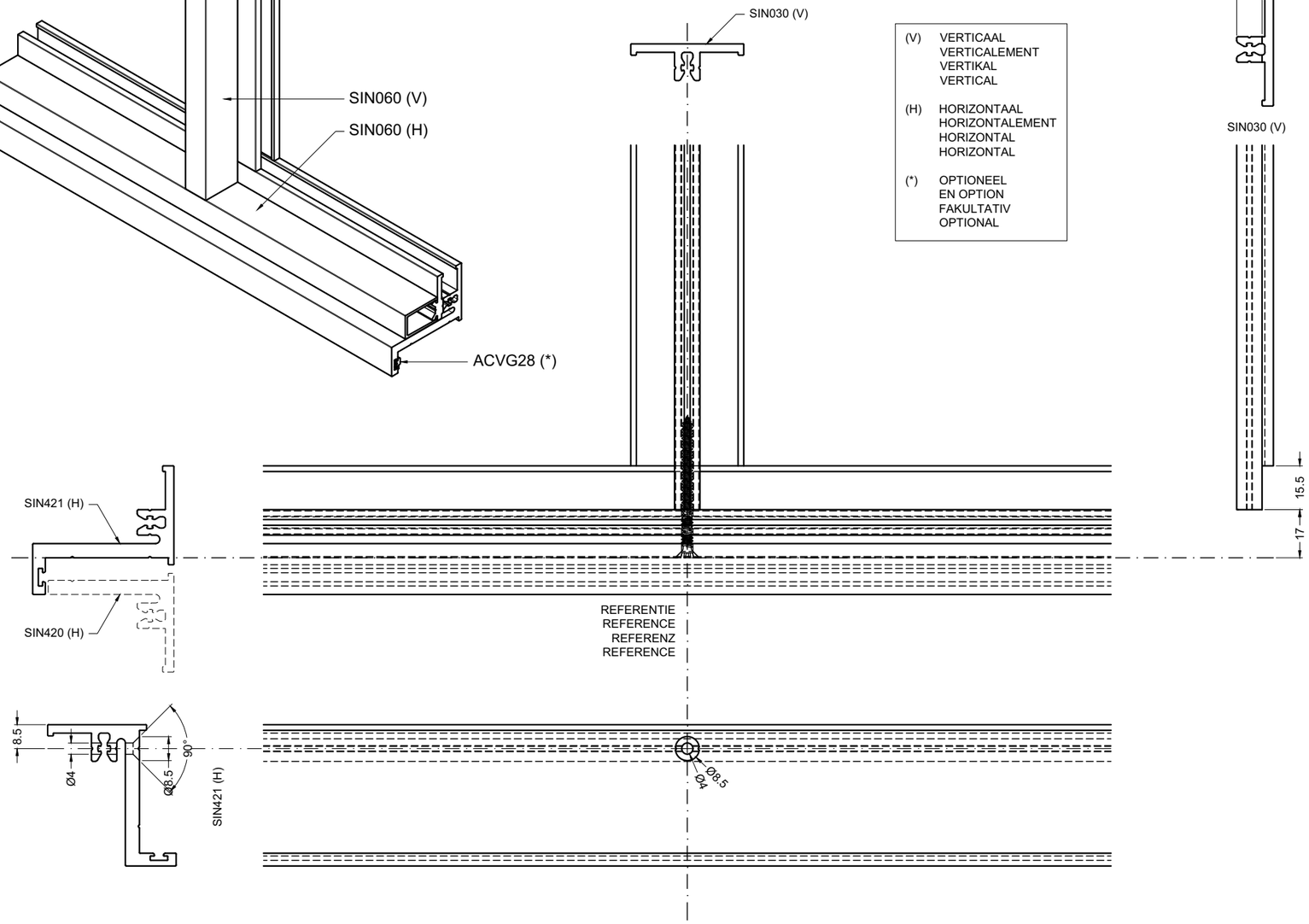


(V) VERTICAAL
VERTICALEMENT
VERTIKAL
VERTICAL

(H) HORIZONTAAL
HORIZONTALEMENT
HORIZONTAL
HORIZONTAL

(*) OPTIONEEL
EN OPTION
FAKULTATIV
OPTIONAL

DETAIL-46A

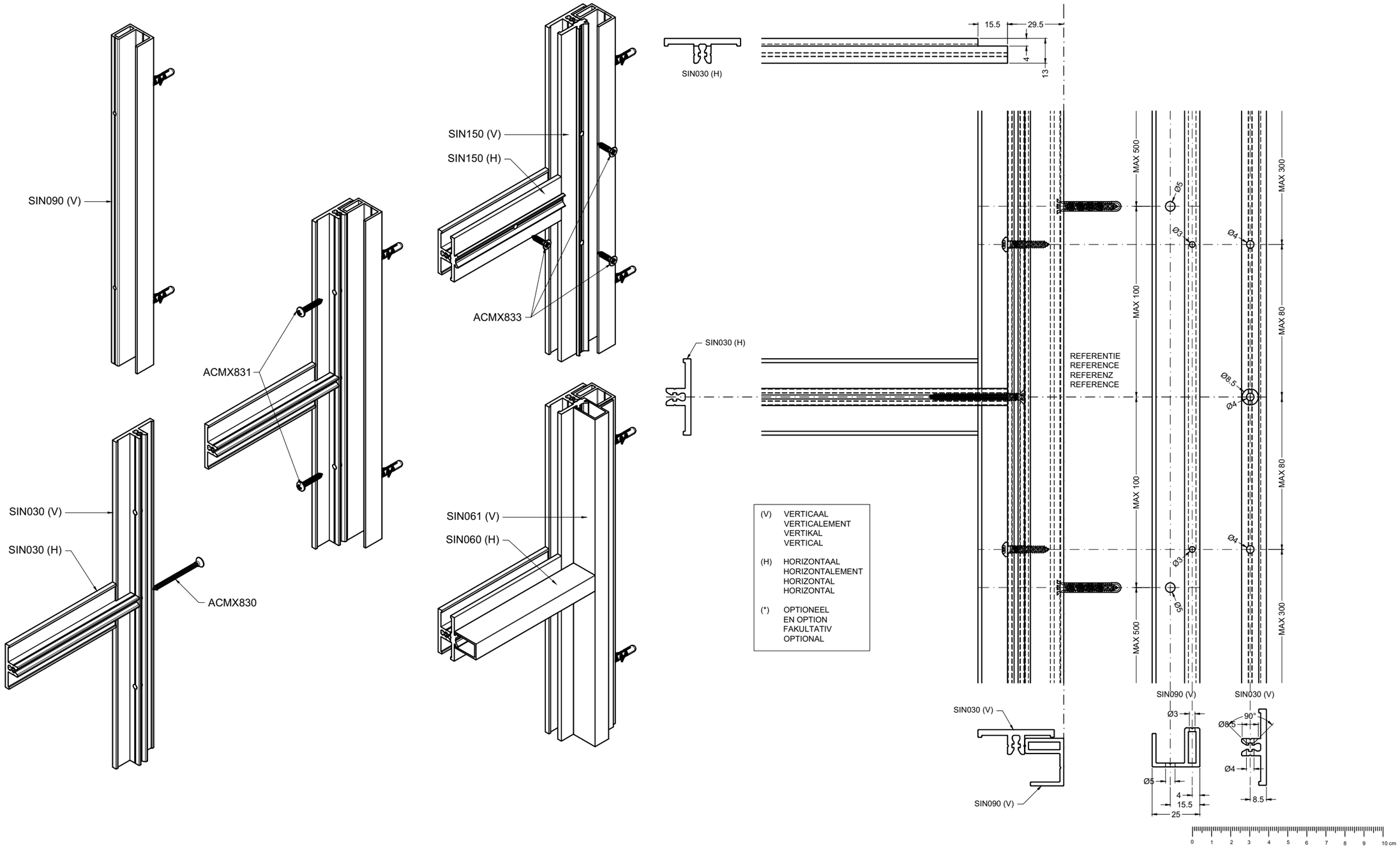
SIN090 (V)
SIN150 (V)
SIN150 (H)
ACMX833
ACMX831
SIN030 (V)
SIN030 (H)
ACMX830
SIN061 (V)
SIN060 (H)
SIN030 (H)
15.5
29.5
4
13
MAX 500
MAX 100
MAX 300
MAX 80
Ø5
Ø3
Ø4
Ø8.5
REFERENTIE
REFERENCE
REFERENZ
REFERENCE
SIN030 (V)
SIN090 (V)
90°
25
8.5
(V) VERTICAAL
VERTICALEMENT
VERTIKAL
VERTICAL
(H) HORIZONTAAL
HORIZONTALEMENT
HORIZONTAL
HORIZONTAL
(*) OPTIONEEL
EN OPTION
FAKULTATIV
OPTIONAL
0 1 2 3 4 5 6 7 8 9 10 cm

DETAIL-47A

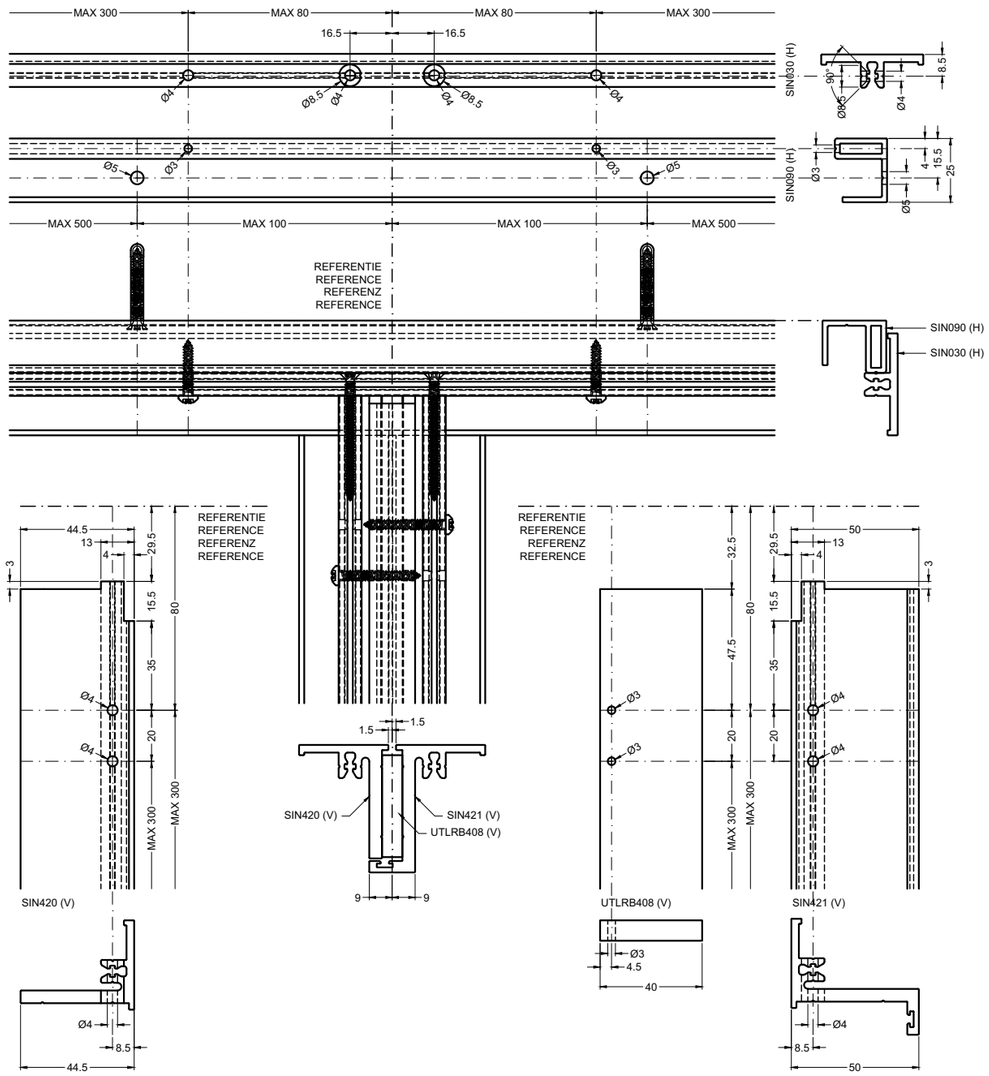


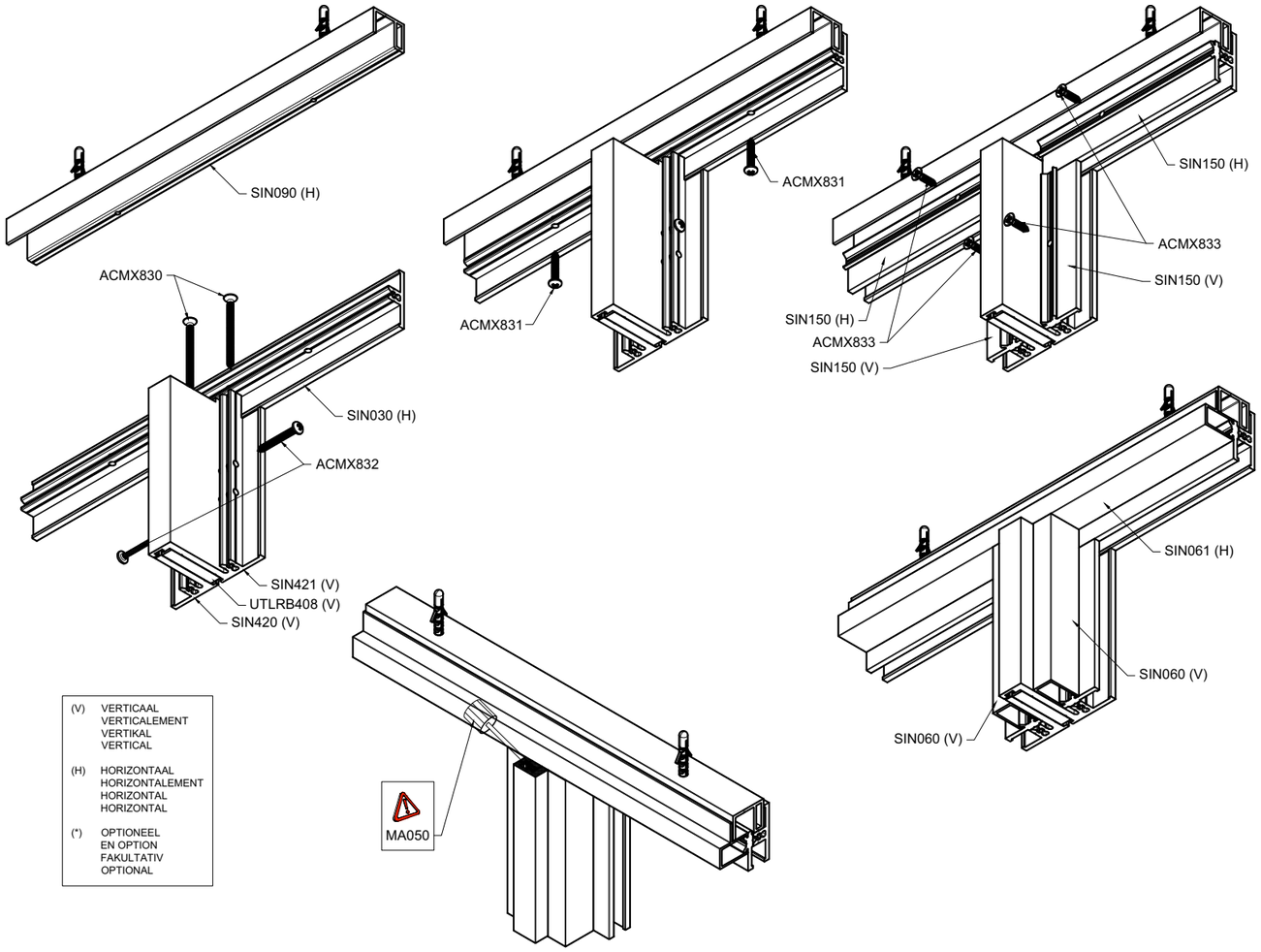


(V) VERTICAAL
VERTICALEMENT
VERTIKAL
VERTICAL

(H) HORIZONTAAL
HORIZONTALEMENT
HORIZONTAL
HORIZONTAL

(*) OPTIONEEL
EN OPTION
FAKULTATIV
OPTIONAL

DETAIL-48A

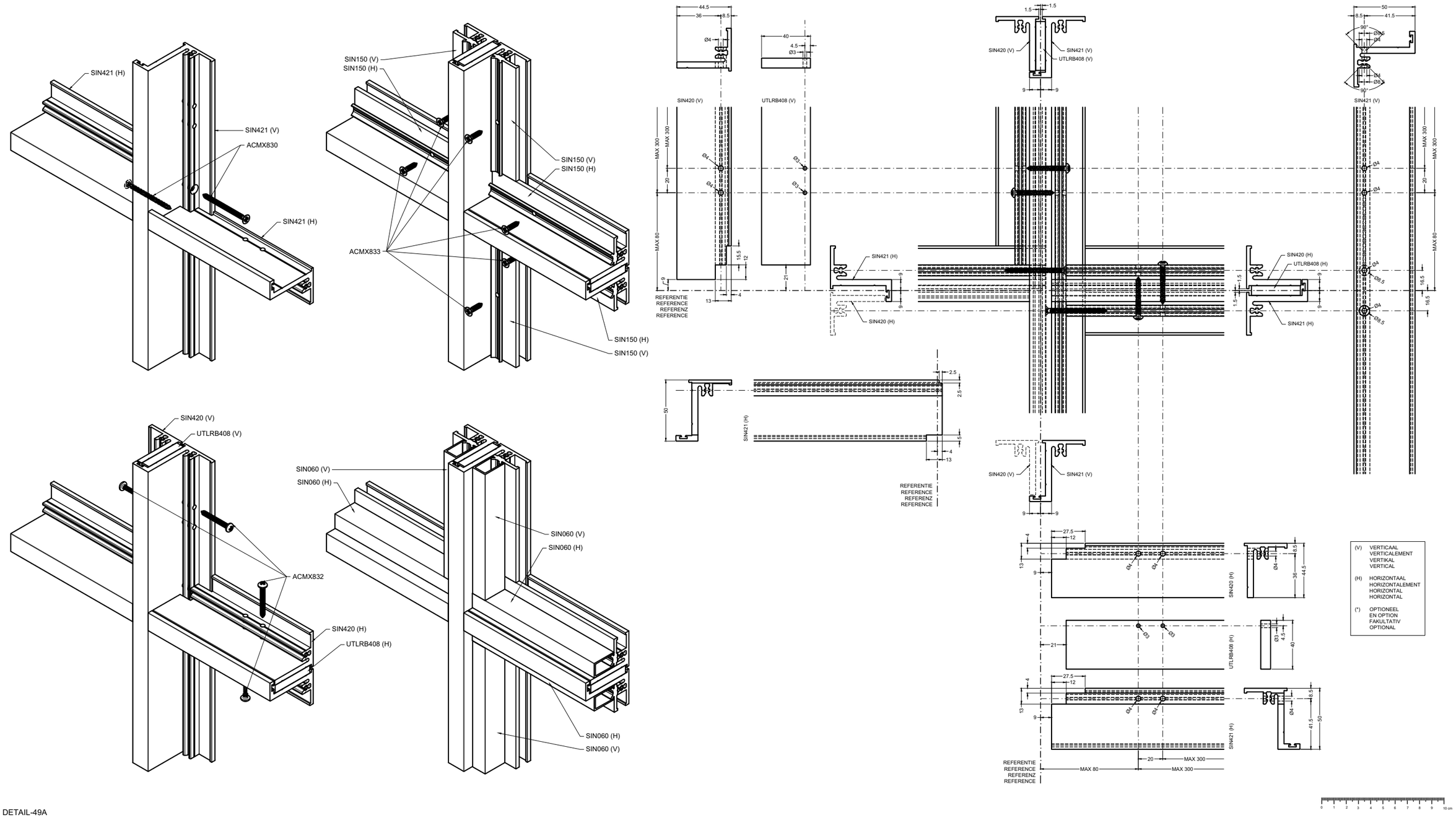
SIN421 (H)
SIN421 (V)
ACMX830
SIN421 (H)
SIN150 (V)
SIN150 (H)
SIN150 (V)
SIN150 (H)
ACMX833
SIN150 (H)
SIN150 (V)
SIN420 (V)
UTLRB408 (V)
SIN060 (V)
SIN060 (H)
ACMX832
SIN420 (H)
UTLRB408 (H)
SIN060 (V)
SIN060 (H)
SIN060 (H)
SIN060 (V)
SIN420 (V)
UTLRB408 (V)
SIN421 (V)
REFERENTIE
REFERENCE
REFERENZ
REFERENCE
SIN421 (H)
SIN420 (H)
UTLRB408 (H)
(V) VERTICAAL
VERTICALEMENT
VERTIKAL
VERTICAL
(H) HORIZONTAAL
HORIZONTALEMENT
HORIZONTAL
HORIZONTAL
(*) OPTIONEEL
EN OPTION
FAKULTATIV
OPTIONAL
MAX 300
MAX 80

DETAIL-49A

OVERZICHT INBOUW
APERCU MONTAGE
UEBERSICHT BEFESTIGUNG
OVERVIEW FITTING

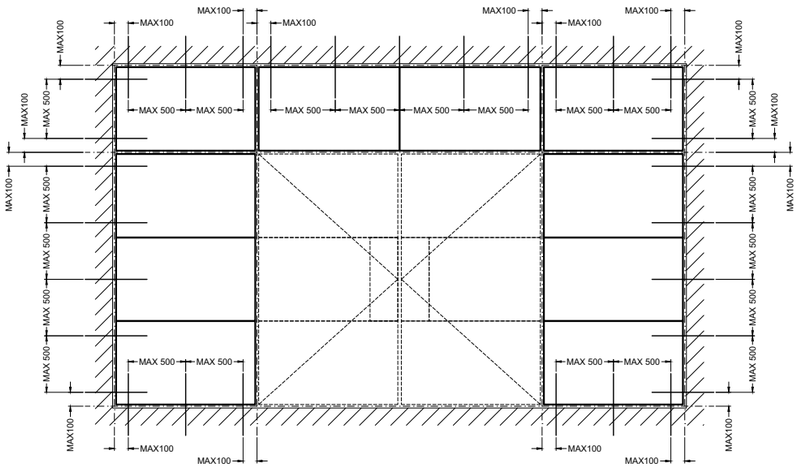


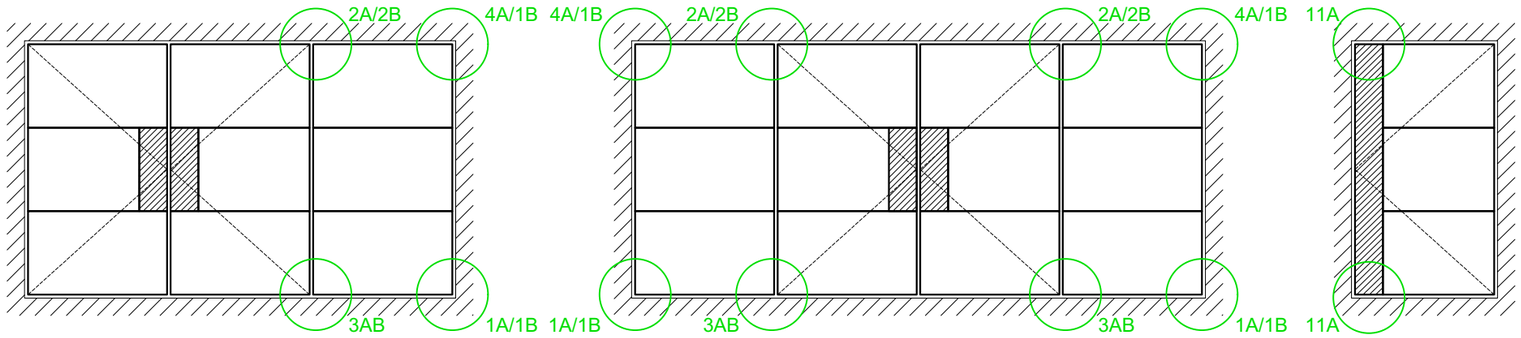


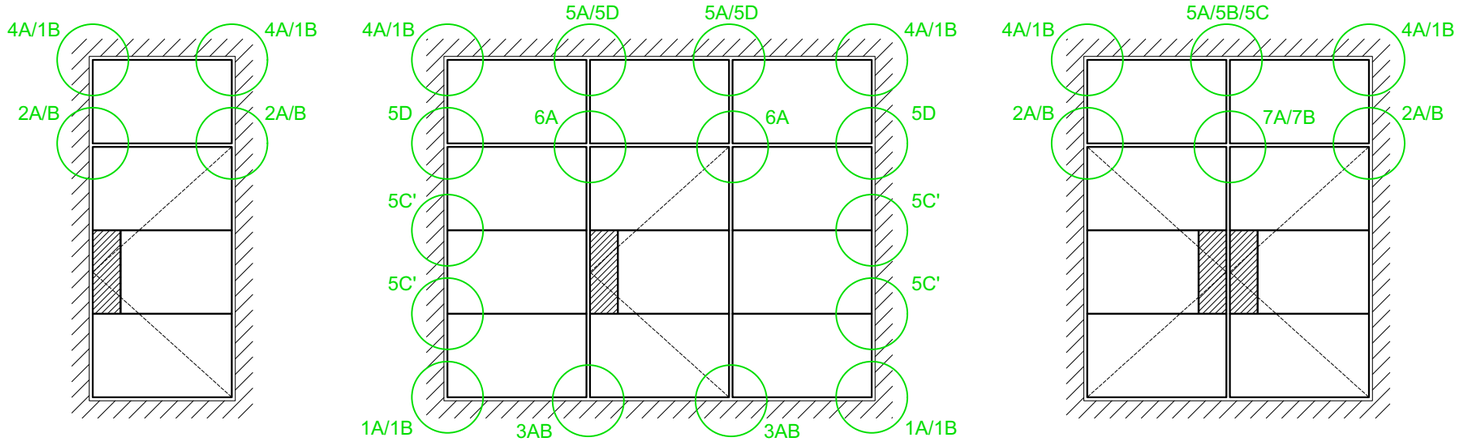


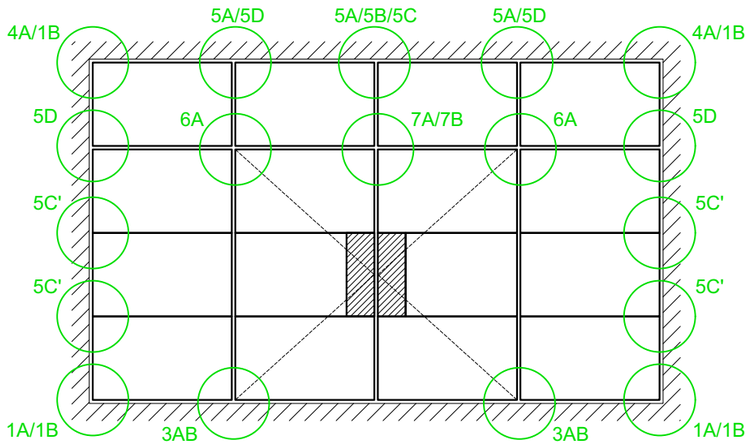


**Inbouw in de ruwbouw**
De bevestiging aan de ruwbouw gebeurt ofwel rechtstreeks doorheen de profielen met bijvoorbeeld schroeven en pluggen, ofwel met behulp van bevestigingsankers.
- De bevestigingen mogen niet minder dan 40 mm van de wand van de ruwbouw worden aangebracht.
- De verankering mag geenszins het draagvermogen van de aangrenzende bouwonderdelen beïnvloeden.
- Alle verankeringen, voor zover niet uit aluminium of roestvrij staal, dienen afdoende tegen corrosie te zijn beschermd en mogen zelf ook geen aantasting van het aluminium veroorzaken.
- Er dienen aan alle zijden minstens 2 bevestigingen aangebracht te worden met een maximale afstand tot de hoek van 100 mm. De afstand van de bevestigingen onderling bedraagt maximum 500 mm.
- Op de plaatsen waar een tussenregel of tussenstijl op de zijstijl, boven- of onderregel aansluit, moet de verankering op maximum 100 mm naast de stijl- of regelaansluiting worden aangebracht.

**Montage dans le gros oeuvre**
La fixation au gros oeuvre se fait soit directement à travers les profiles avec par exemple des vis et des chevilles, soit à l'aide d'ancrages de fixation.
- Les fixations ne peuvent pas être appliquées à une distance inférieure à 40 mm du mur du gros oeuvre.
- L'ancrage ne peut surtout pas influencer la force portante des éléments de construction contigus.
- Tous les ancrages, pour autant qu'ils ne soient pas en aluminium ou en acier inoxydable, doivent être efficacement protégés contre la corrosion et ne peuvent pas corroder l'aluminium.
- De tous les côtés il doit y avoir au moins 2 fixations avec une distance maximale jusqu'à l'angle de 100 mm. La distance entre les fixations est de 500 mm au maximum.
- A l'endroit ou des profils T et des profils dormants se rencontrent, l'ancrage doit être appliqué à une distance maximale de 100 mm des deux côtés de profile T.
De cette façon, une dilatation ou un rétrécissement du profile T (dus aux fluctuations de température) sont possibles sans dégâts.

**Befestigung am Baukörper**
Die Befestigung am Baukörper erfolgt durch systemabhängige Befestigungsanker, Rohrrahmendübel oder andere Befestigungsteile.
- Beim Einsatz von Schrauben und Dübeln ist zu gewährleisten, dass die Mindestrandabstände 40 mm gemäß den Verarbeitungsrichtlinien der Befestigungshersteller eingehalten werden.
- Verankerungen sollen aus Aluminium oder Edelstahl bzw. korrosionsgeschützt sein, damit die Aluminiumprofile nicht angegriffen werden.
- Rahmenseite müssen mind. zwei Befestigungen eingebracht werden. Der max. Abstand zur Rahmenecke darf 100 mm nicht unterschreiten. Der max. Abstand der Befestigungspunkte untereinander darf 500 mm nicht unterschreiten.
- Im Bereich von Pfosten- und Riegelanschluss sind die Befestigungspunkte ebenfalls 100 mm aus der Ecke vorzunehmen. Es wird empfohlen, die Befestigungspunkte in den Bereich der Eck- und Scherenlager.

**Fitting in the structural work**
The fixing to the structural work is done either directly through the profiles by means of for instance screws and plugs, or by means of fixing lugs.
- The fixings may not be applied less than 40 mm of the wall of the structural work.
- The anchoring may in no way influence the bearing power of the adjacent building parts.
- All anchoring, as far as they are not made of Aluminum or stainless steel, should be adequately corrosion protected and may not attack the Aluminum themselves.
- At least two fixings should be applied on all sides; the maximum distance to the corner is at least 100 mm. The distance between the fixings is maximum 500 mm.
- Where transom/mullions and outer frame profiles meet, the fixing must be applied maximum 100 mm from both sides of the transom/mullion.

(V) VERTICAAL
VERTICALEMENT
VERTIKAL
VERTICAL

(H) HORIZONTAAL
HORIZONTALEMENT
HORIZONTAL
HORIZONTAL

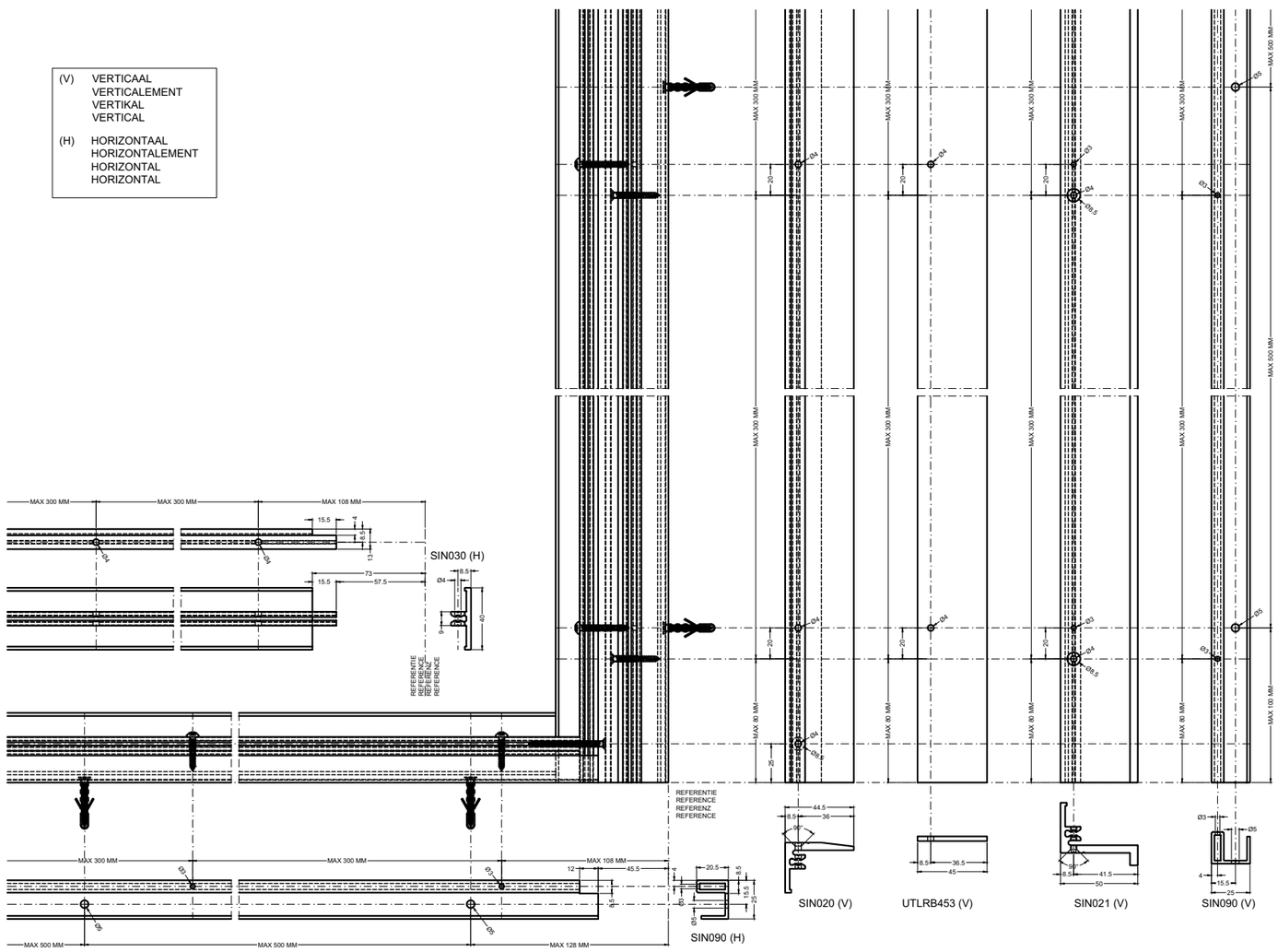


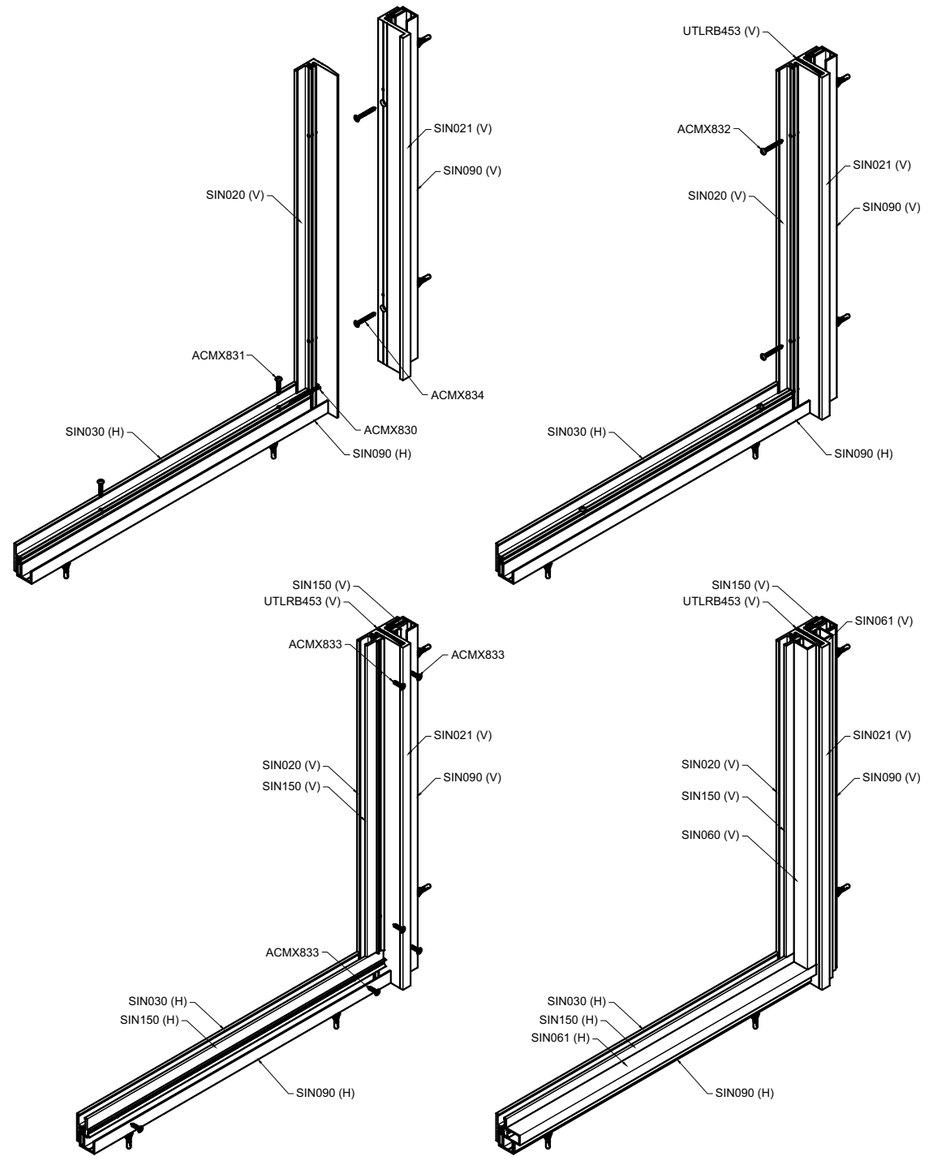


1A-MONTAGE SIN090

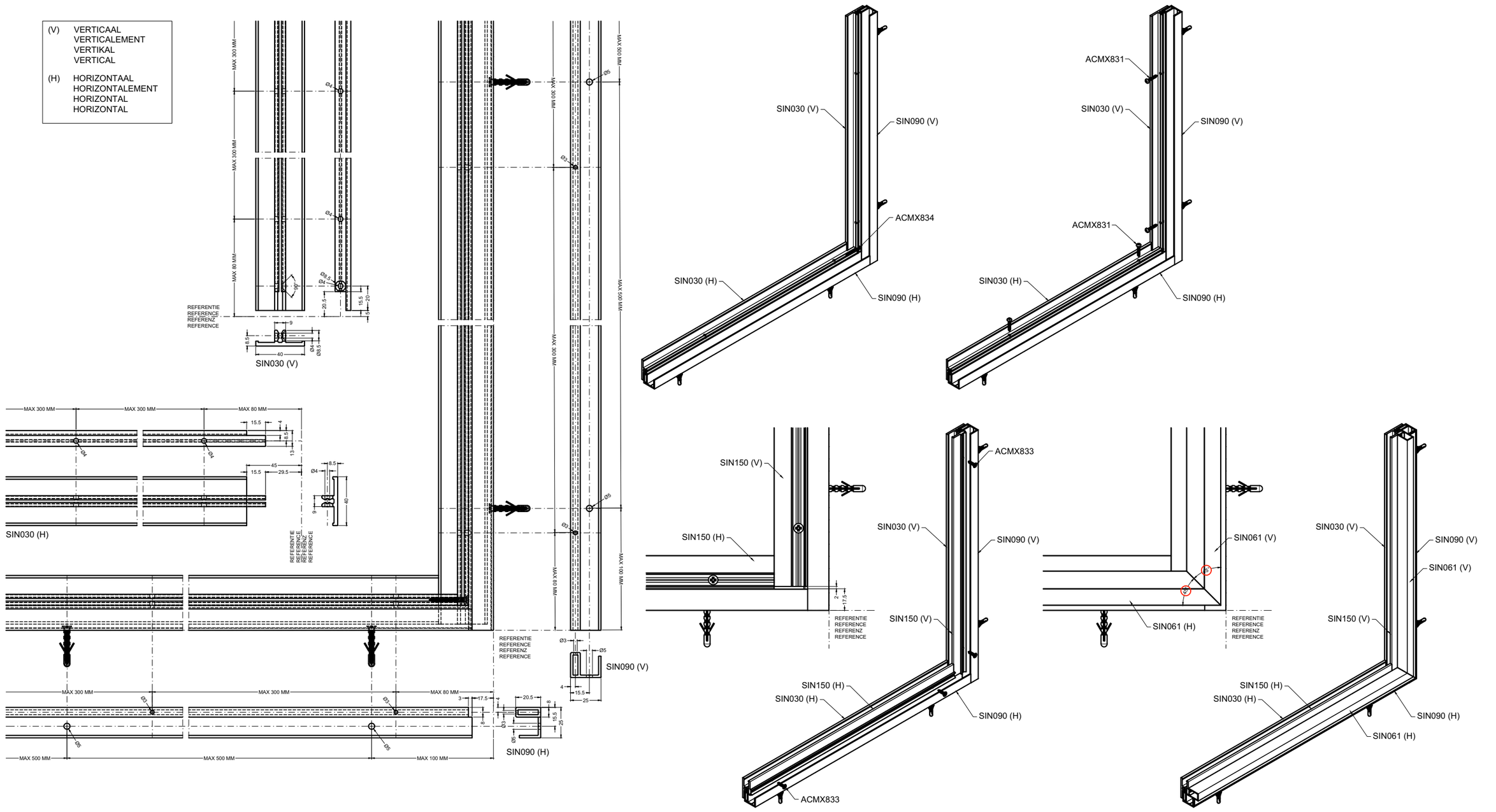


1B-MONTAGE SIN090

# 2A

(V) VERTICAAL
VERTICALEMENT
VERTIKAL
VERTICAL

(H) HORIZONTAAL
HORIZONTALEMENT
HORIZONTAL
HORIZONTAL

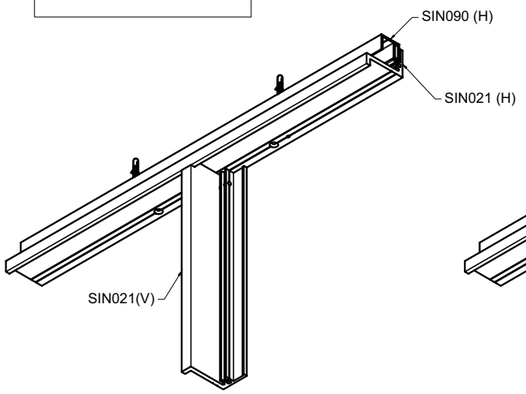


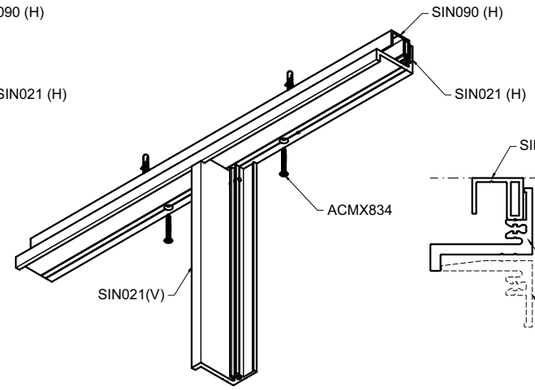


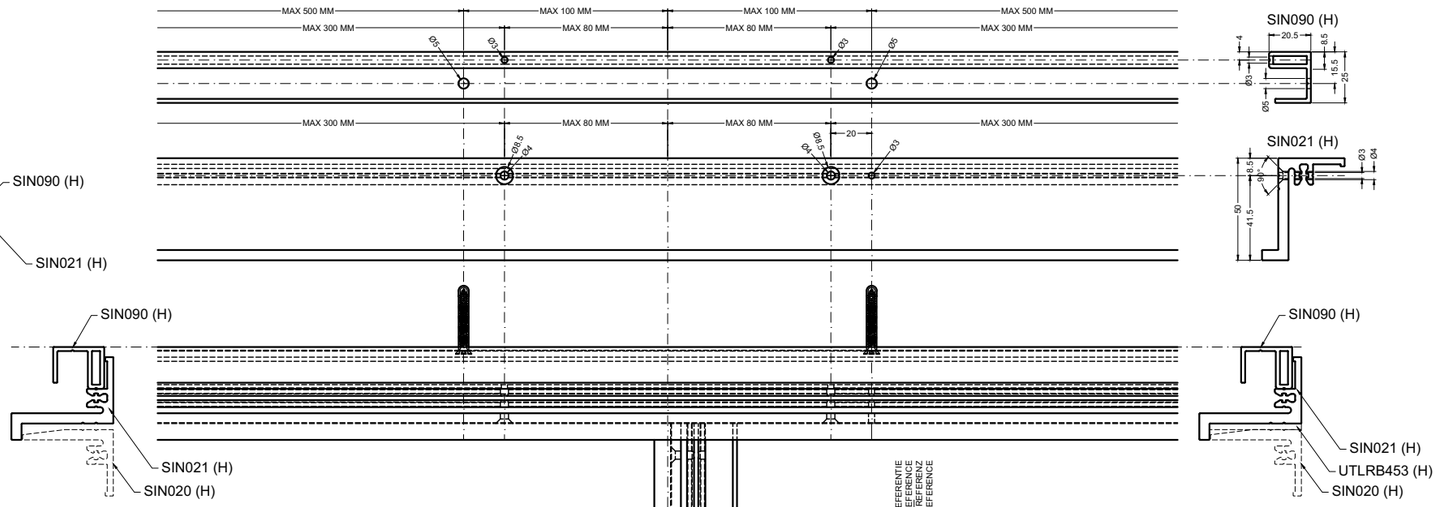


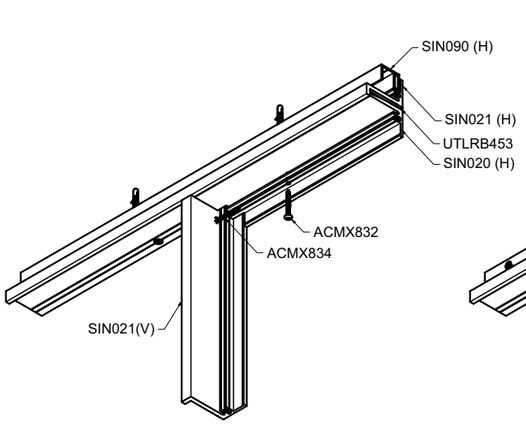


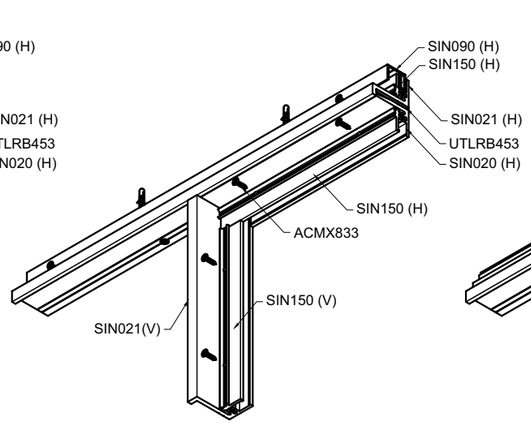


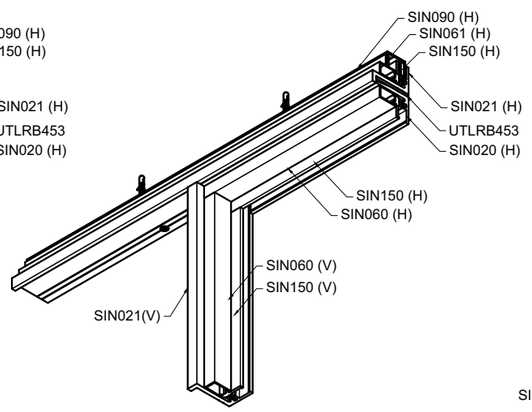


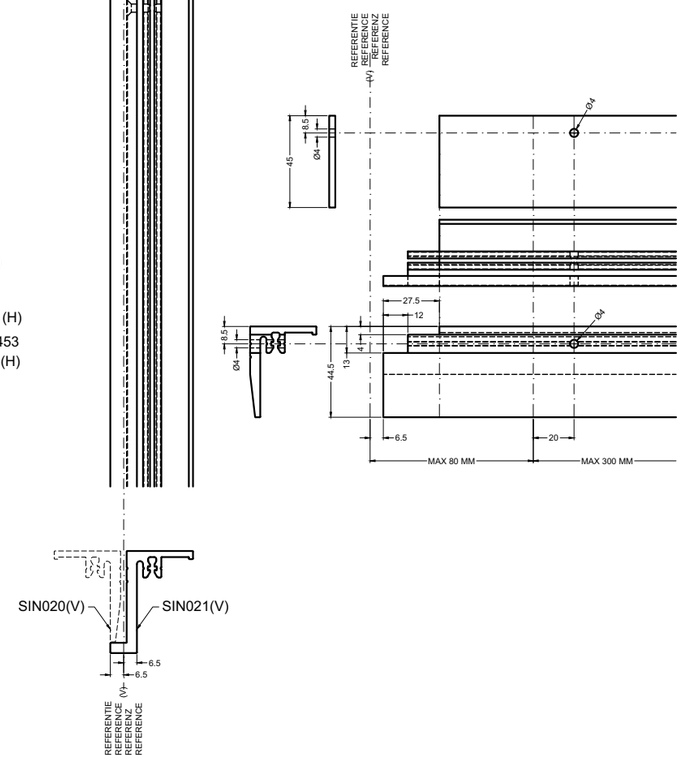


2A-MONTAGE SIN090

aliplast member of CORIALIS

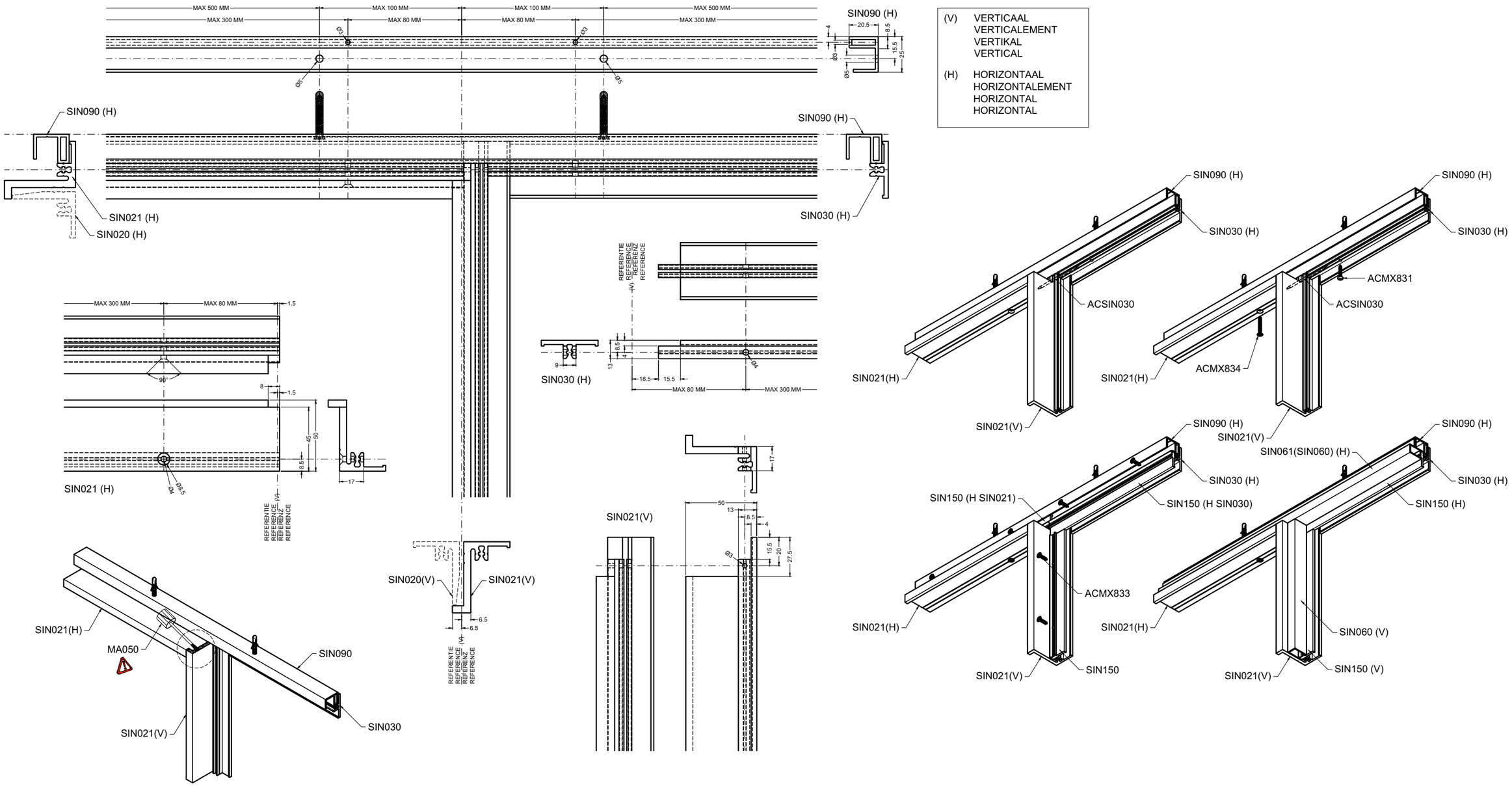


2B-MONTAGE SIN090

IDA

(V) VERTICAAL
VERTICALEMENT
VERTIKAL
VERTICAL

(H) HORIZONTAAL
HORIZONTALEMENT
HORIZONTAL
HORIZONTAL

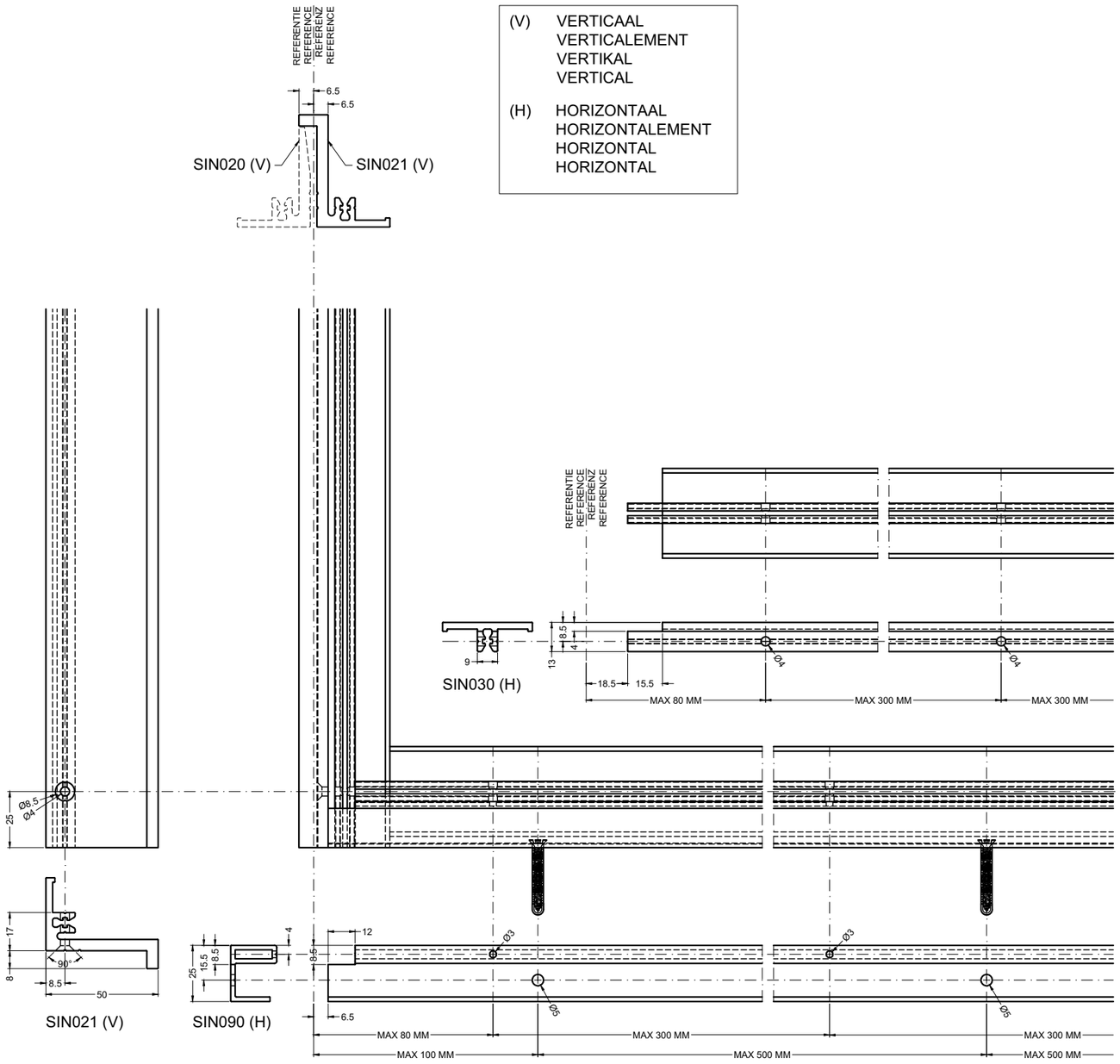


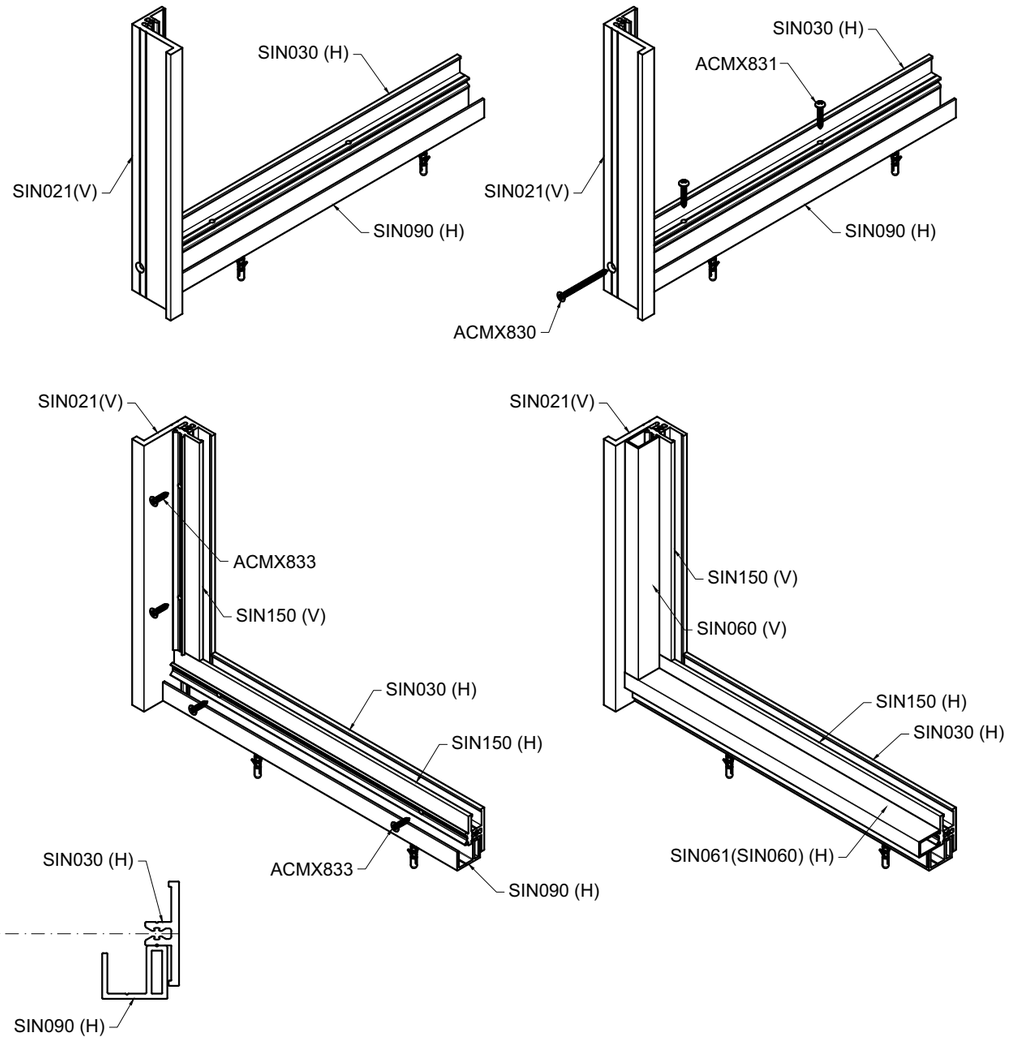


3AB-MONTAGE SIN090

aliplast member of CORIALIS

WERKTEKENINGEN - DESSINS DE CONSTRUCTION - KONSTRUKTIONZEICHNUNGEN - CONSTRUCTION DRAWINGS

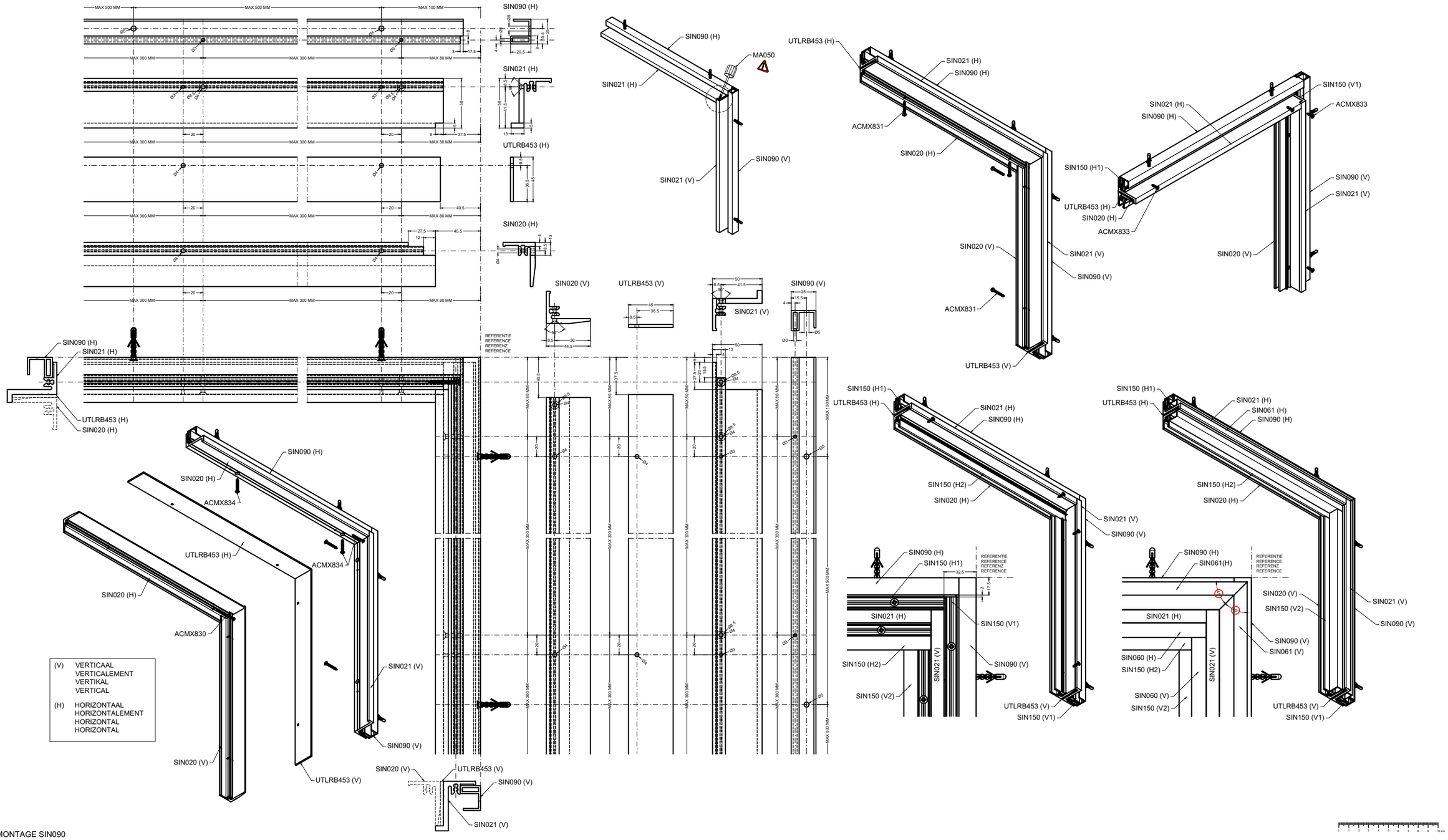


4A-MONTAGE SIN090

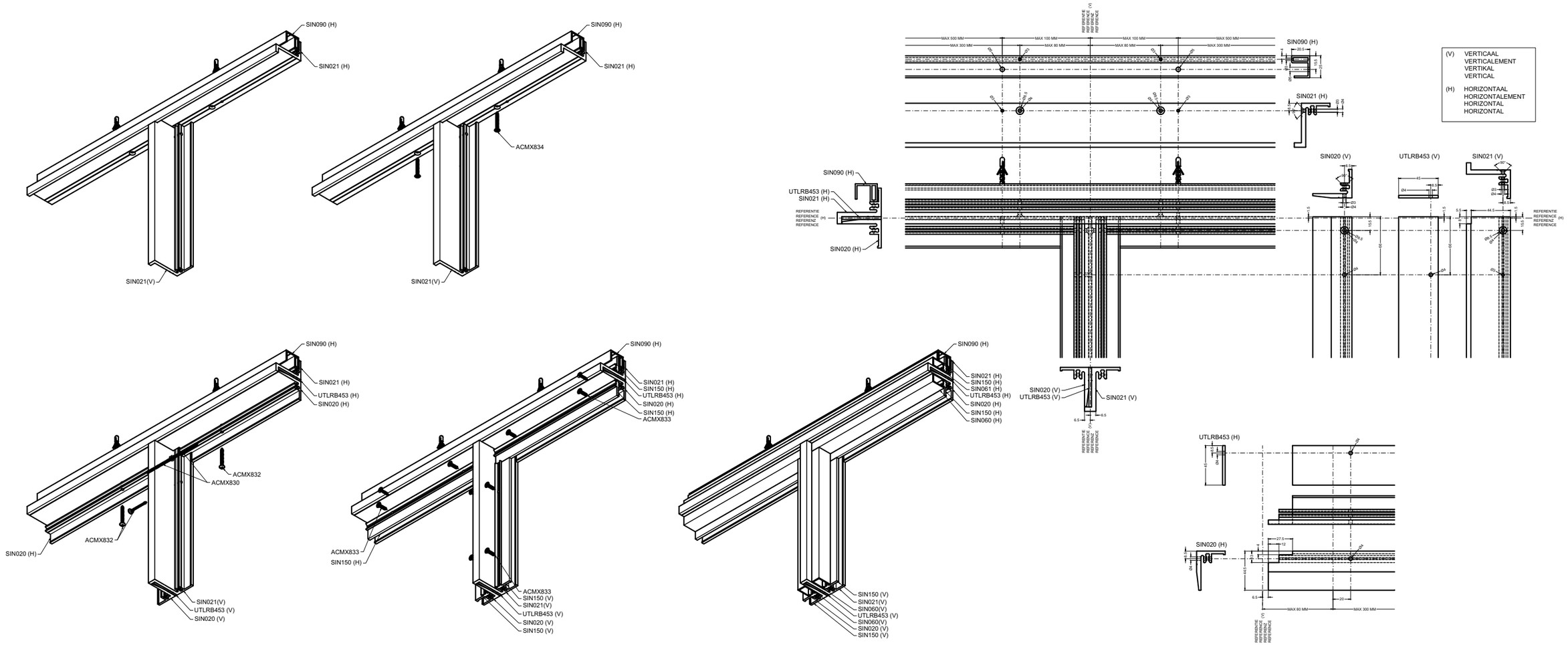


5A-MONTAGE SIN090

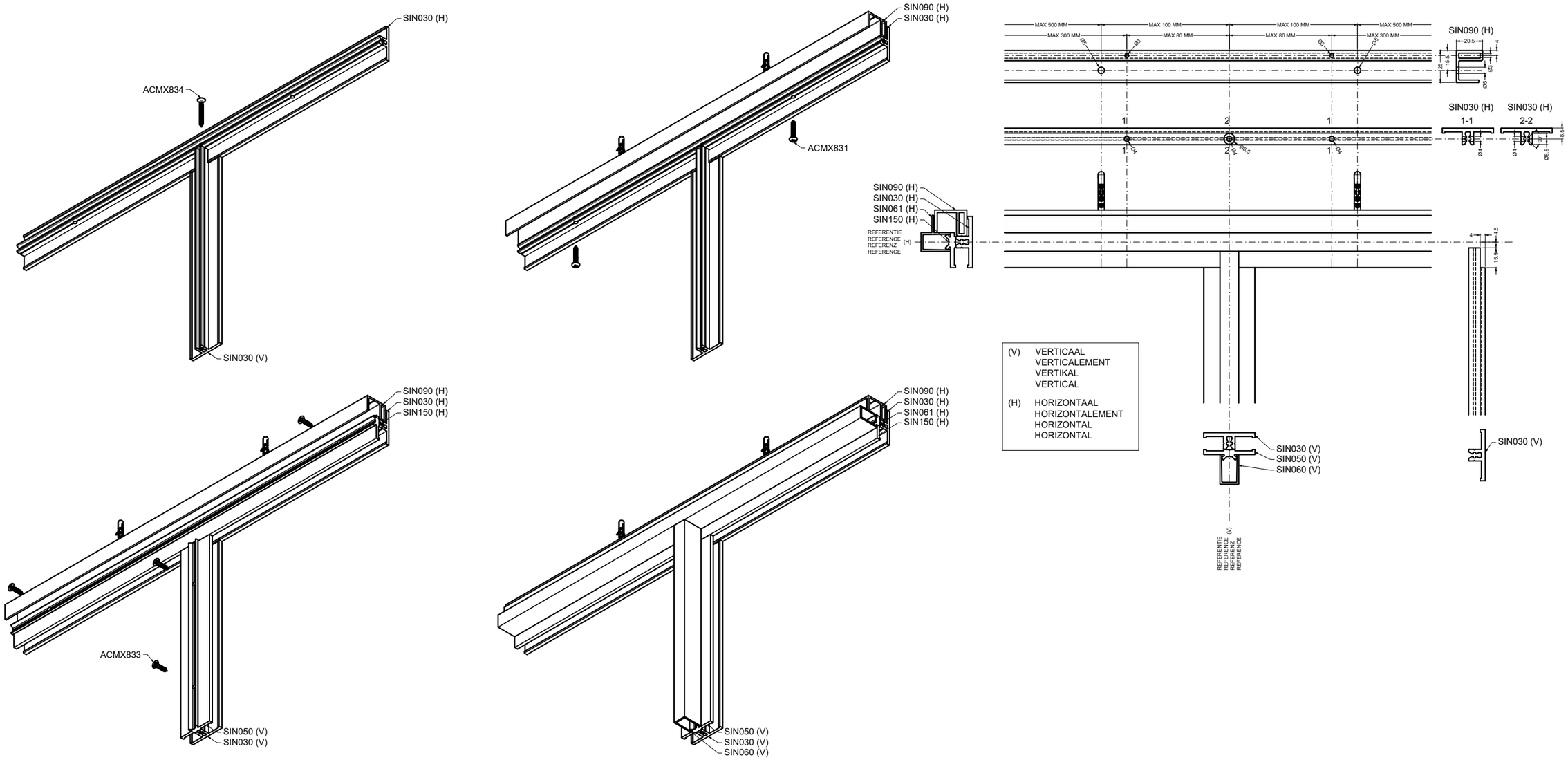


5B-MONTAGE SIN090

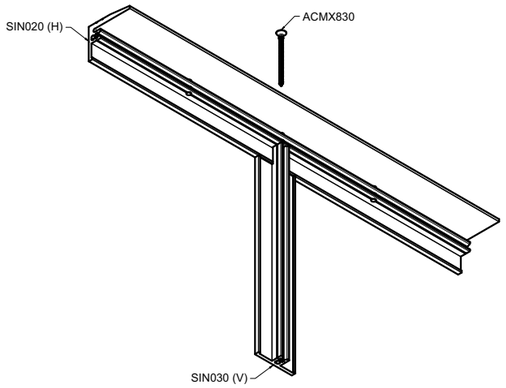


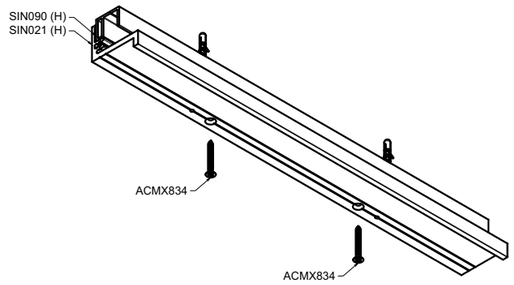


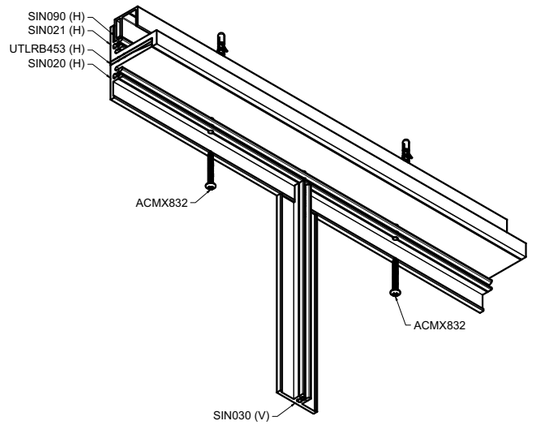


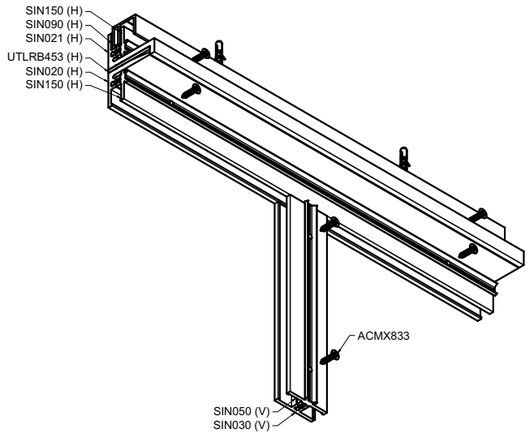


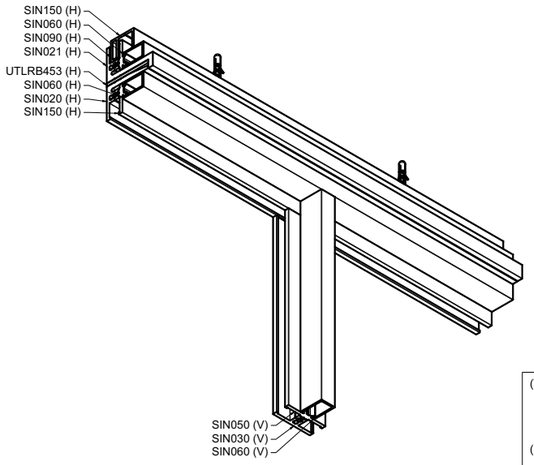


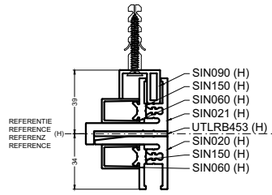


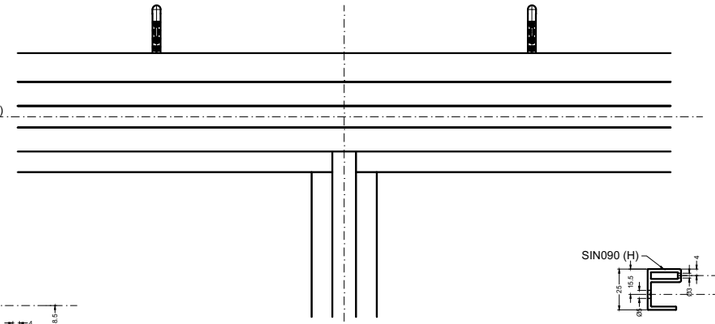

| | |
|---|---|
| (V) | VERTICAAL<br>VERTICALEMENT<br>VERTIKAL<br>VERTICAL |
| (H) | HORIZONTAAL<br>HORIZONTALEMENT<br>HORIZONTAL<br>HORIZONTAL |

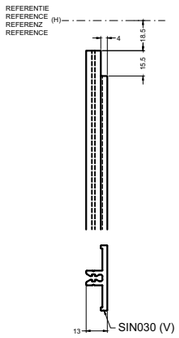


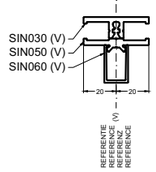


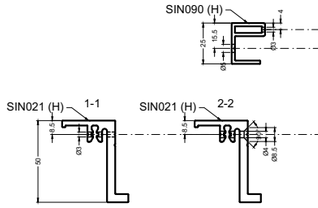


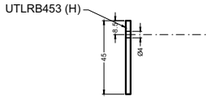


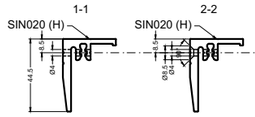


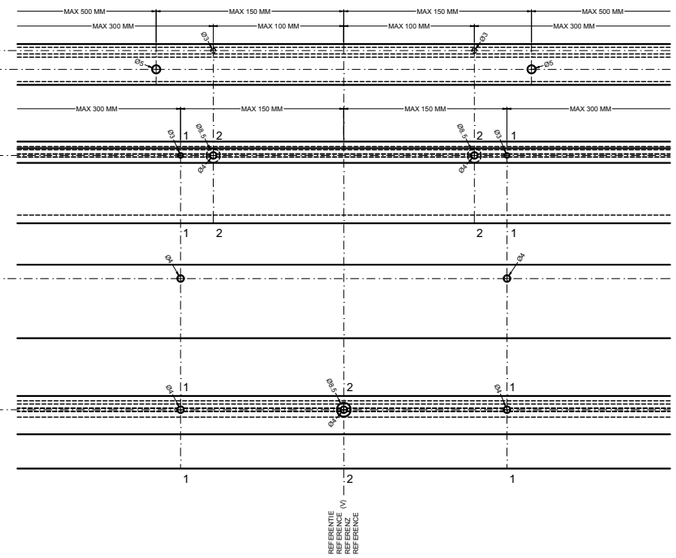


5C-MONTAGE SIN090

aliplast member of CURIALIS

# 5C’

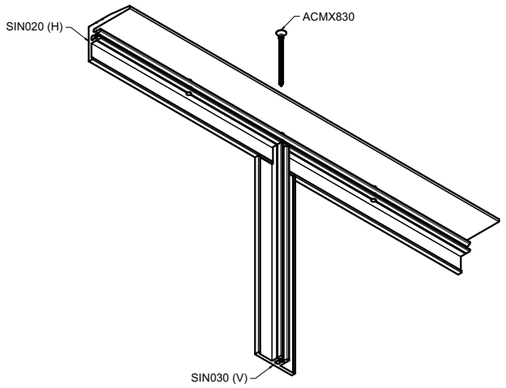


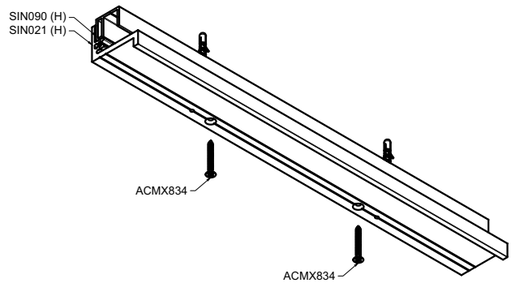


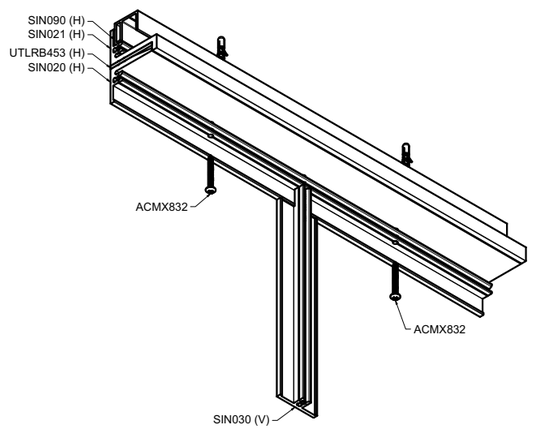


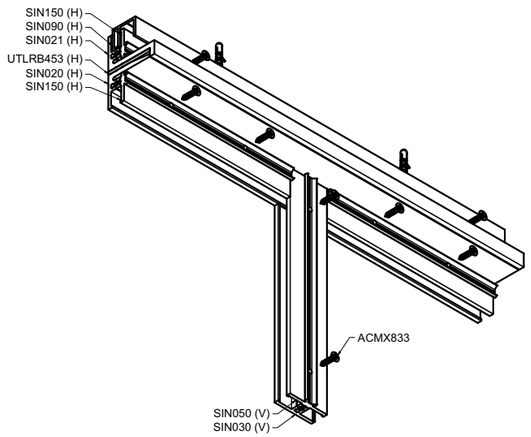


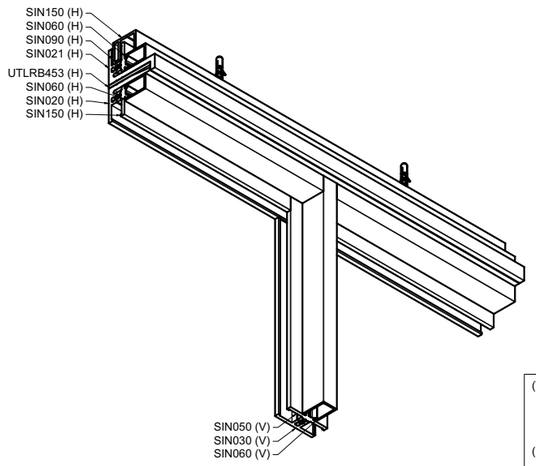


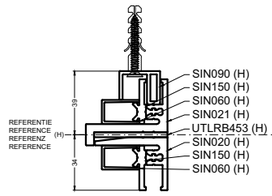


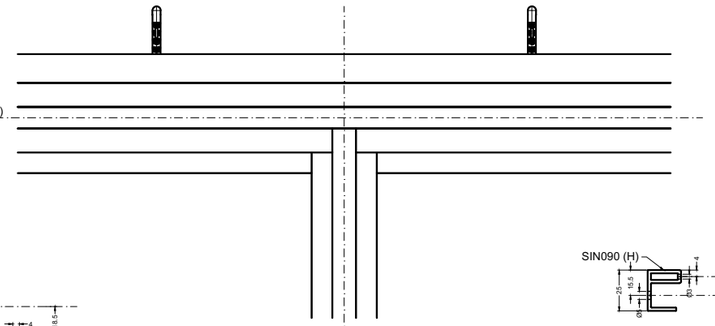

| | |
|---|---|
| (V) | VERTICAAL<br>VERTICALEMENT<br>VERTIKAL<br>VERTICAL |
| (H) | HORIZONTAAL<br>HORIZONTALEMENT<br>HORIZONTAL<br>HORIZONTAL |

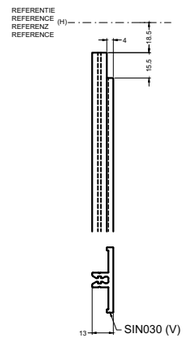


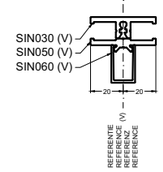


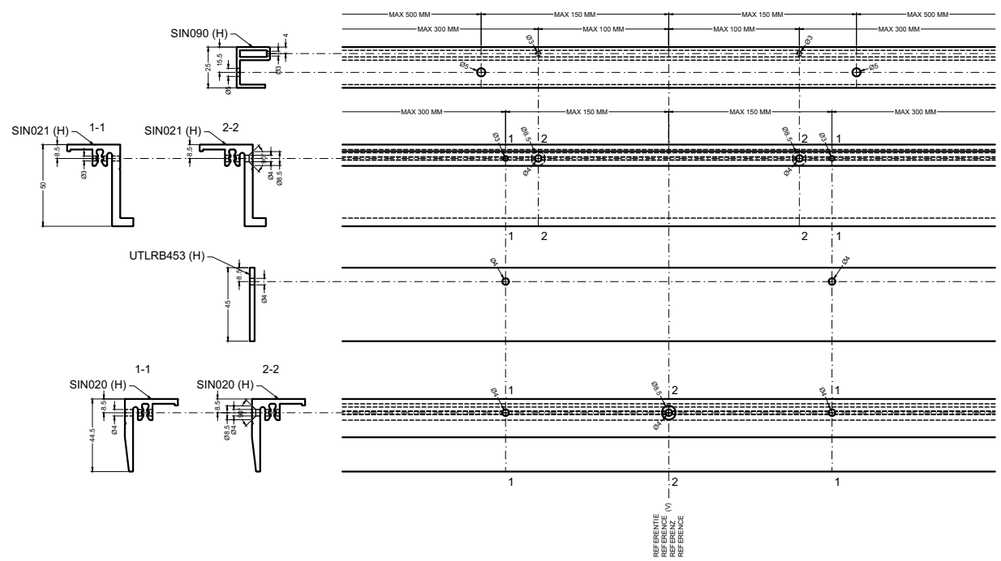


5C'-MONTAGE SIN090

# 5D

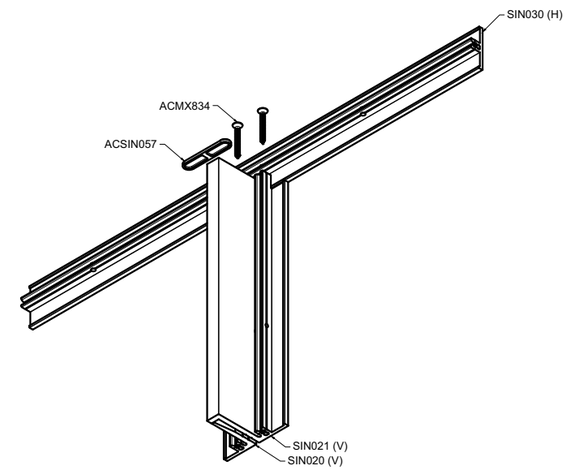


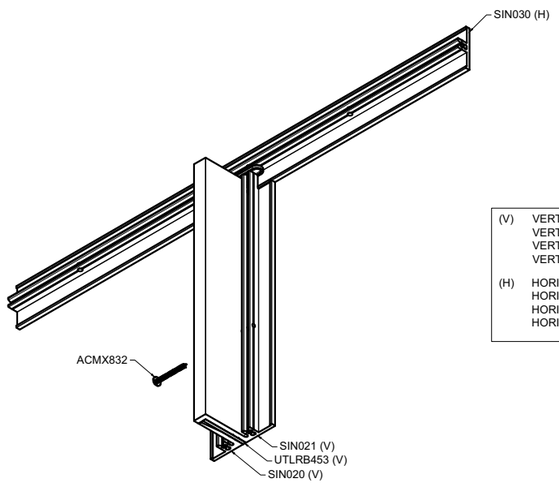


(V) VERTICAAL
VERTICALEMENT
VERTIKAL
VERTICAL

(H) HORIZONTAAL
HORIZONTALEMENT
HORIZONTAL
HORIZONTAL

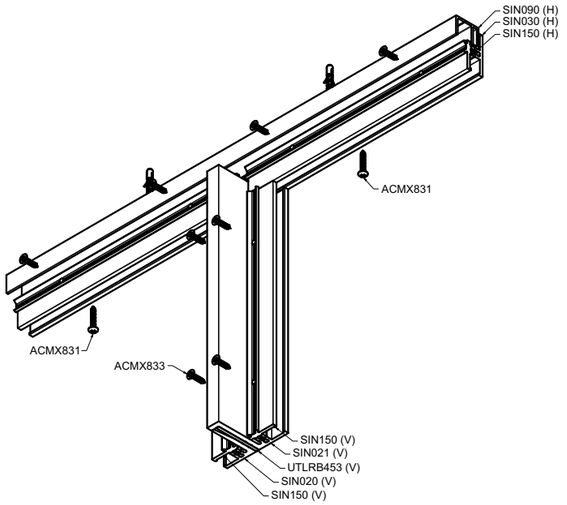


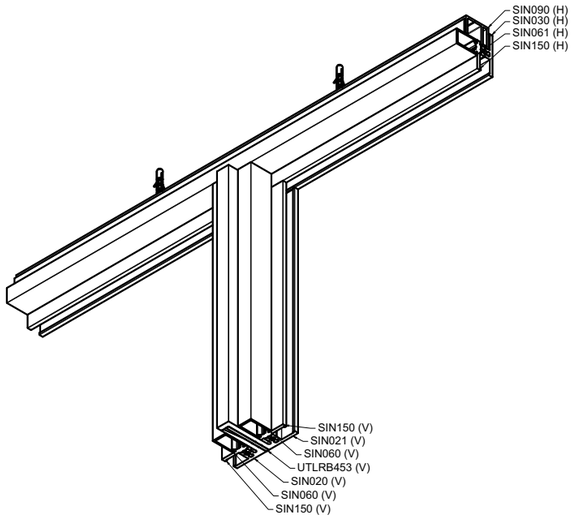


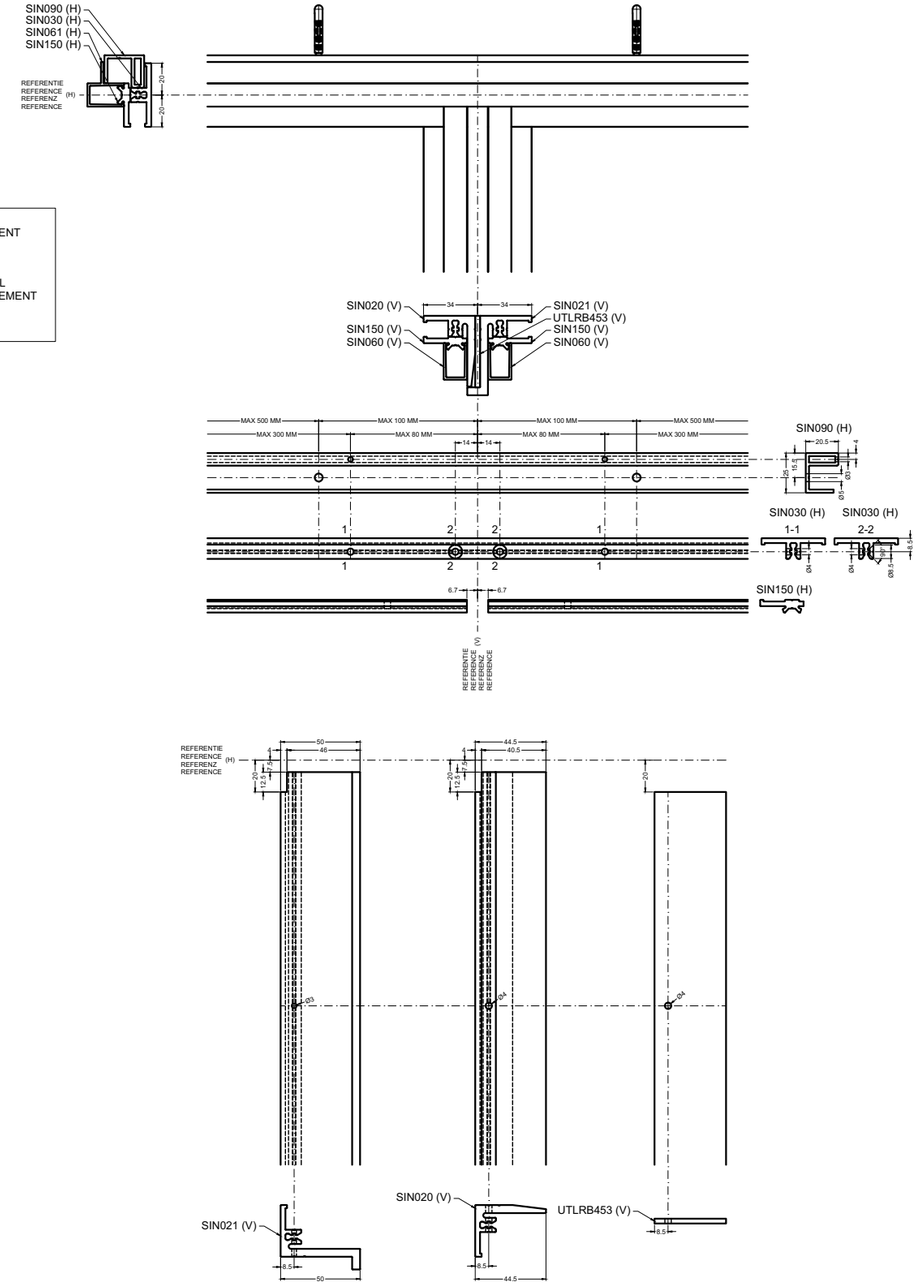


5D-MONTAGE SIN090

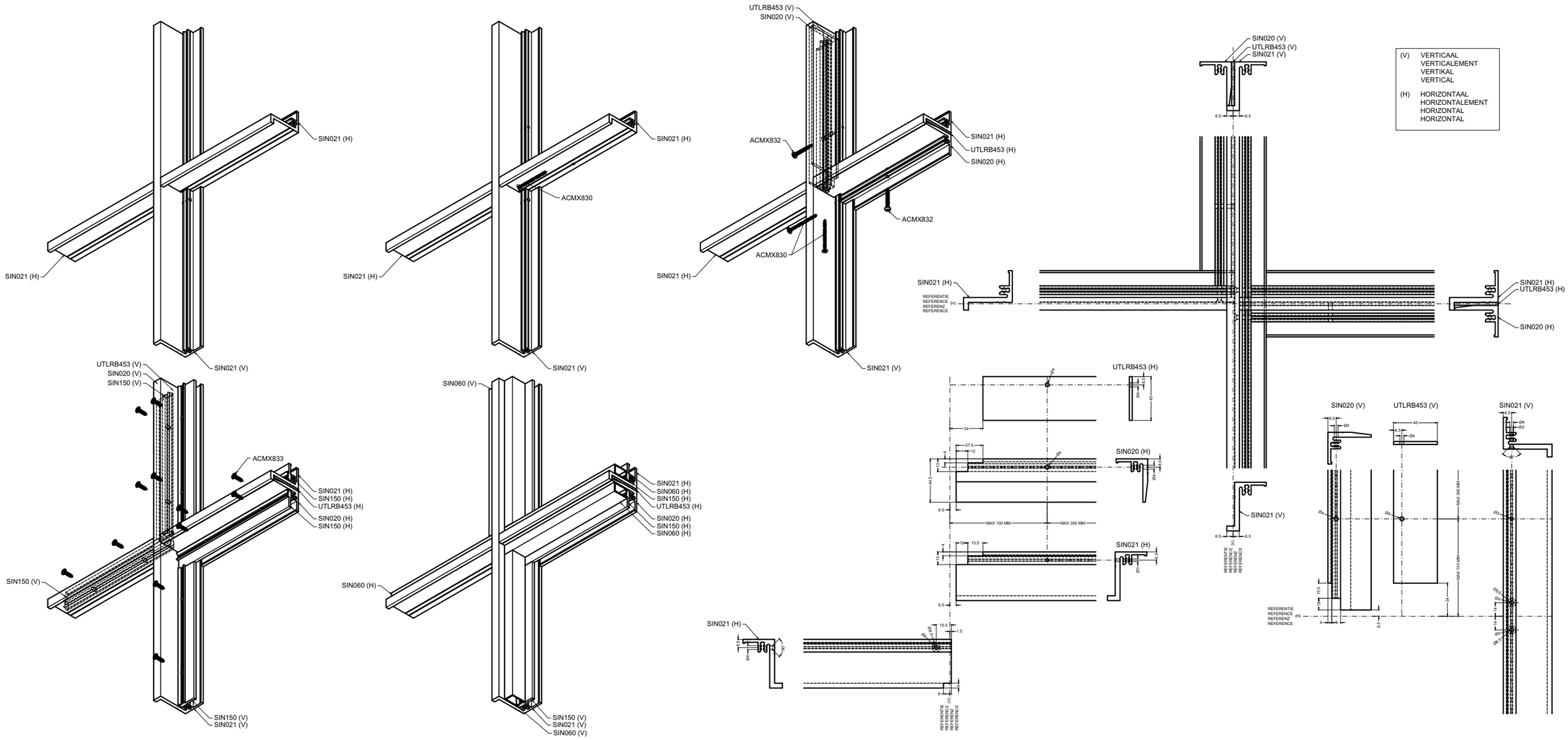


6A-MONTAGE SIN090

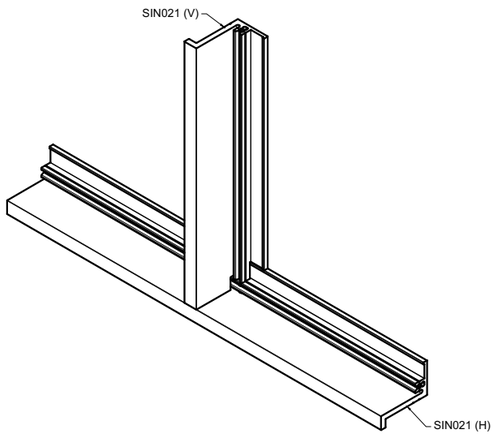


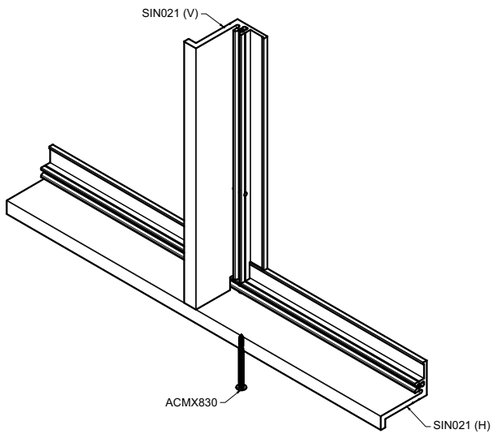


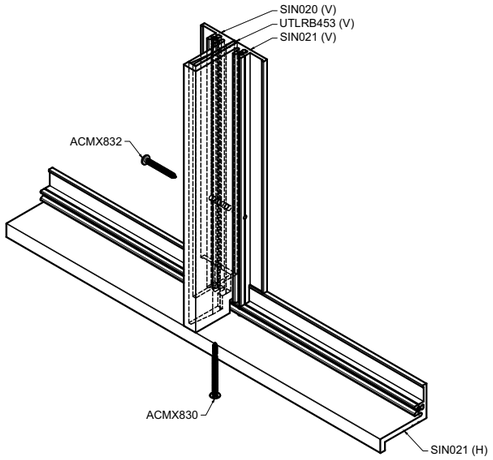


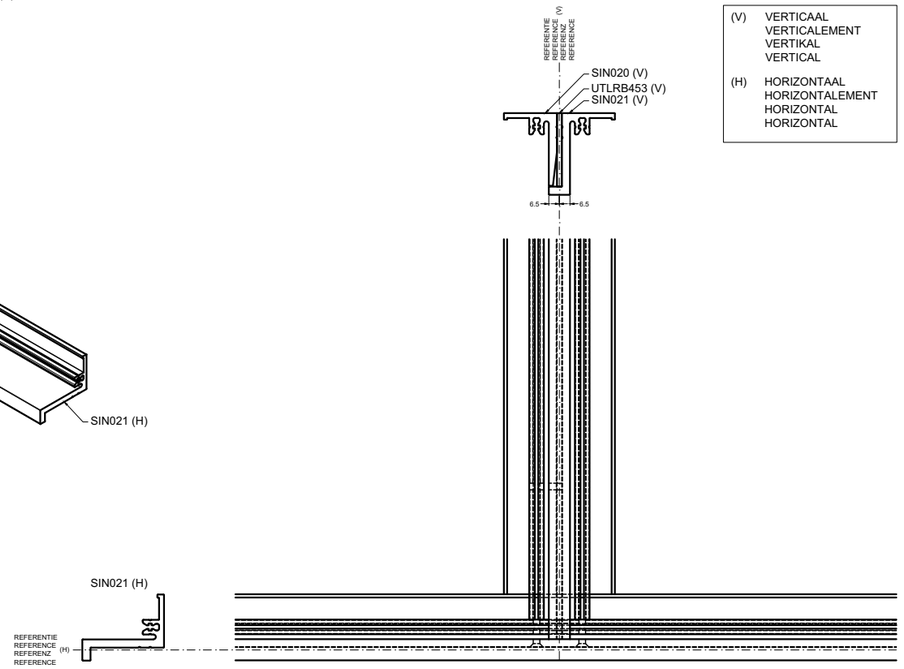


(V) VERTICAAL
VERTICALEMENT
VERTIKAL
VERTICAL

(H) HORIZONTAAL
HORIZONTALEMENT
HORIZONTAL
HORIZONTAL

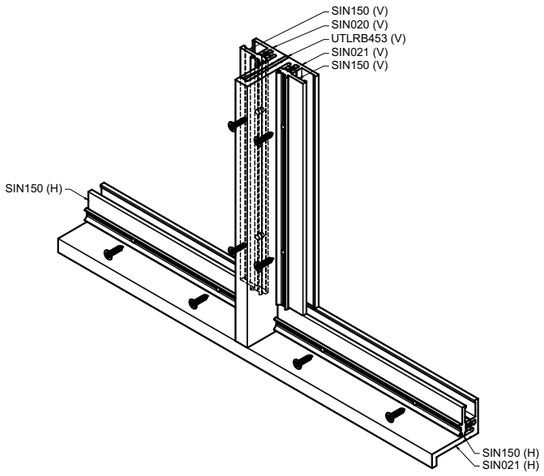


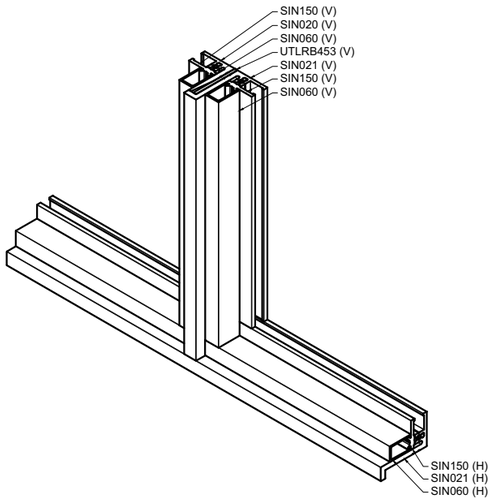


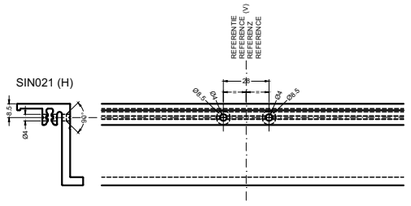


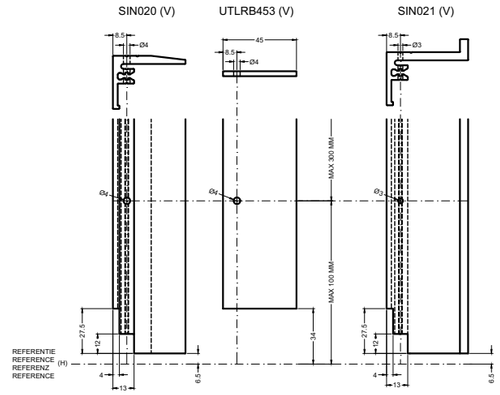


7A-MONTAGE SIN090

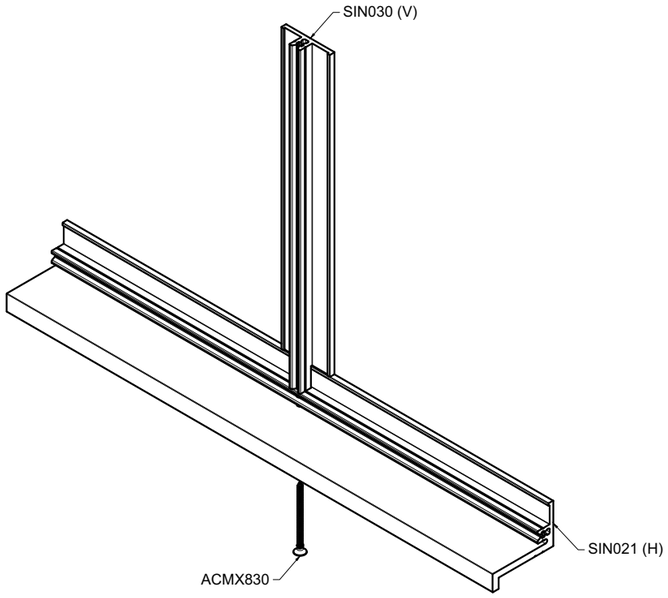


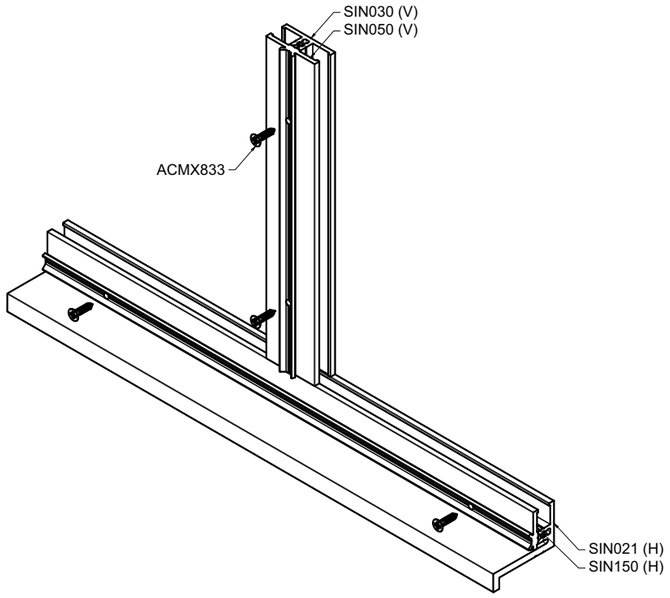


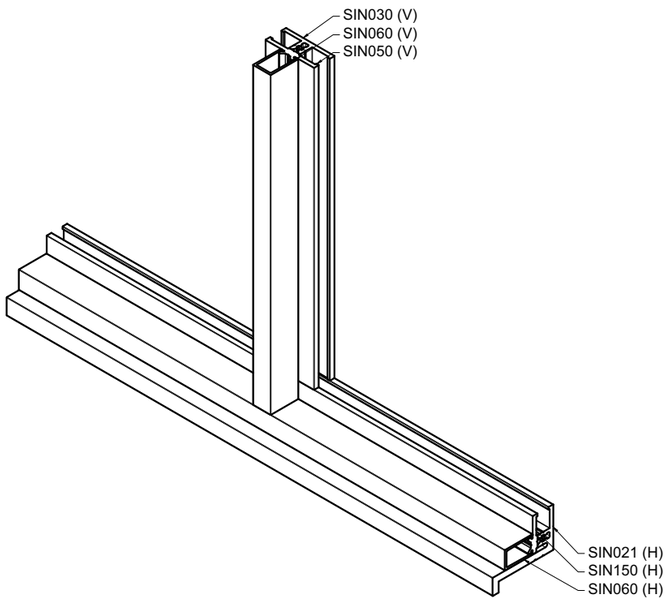


| | |
|---|---|
| (V) | VERTICAAL<br>VERTICALEMENT<br>VERTIKAL<br>VERTICAL |
| (H) | HORIZONTAAL<br>HORIZONTALEMENT<br>HORIZONTAL<br>HORIZONTAL |

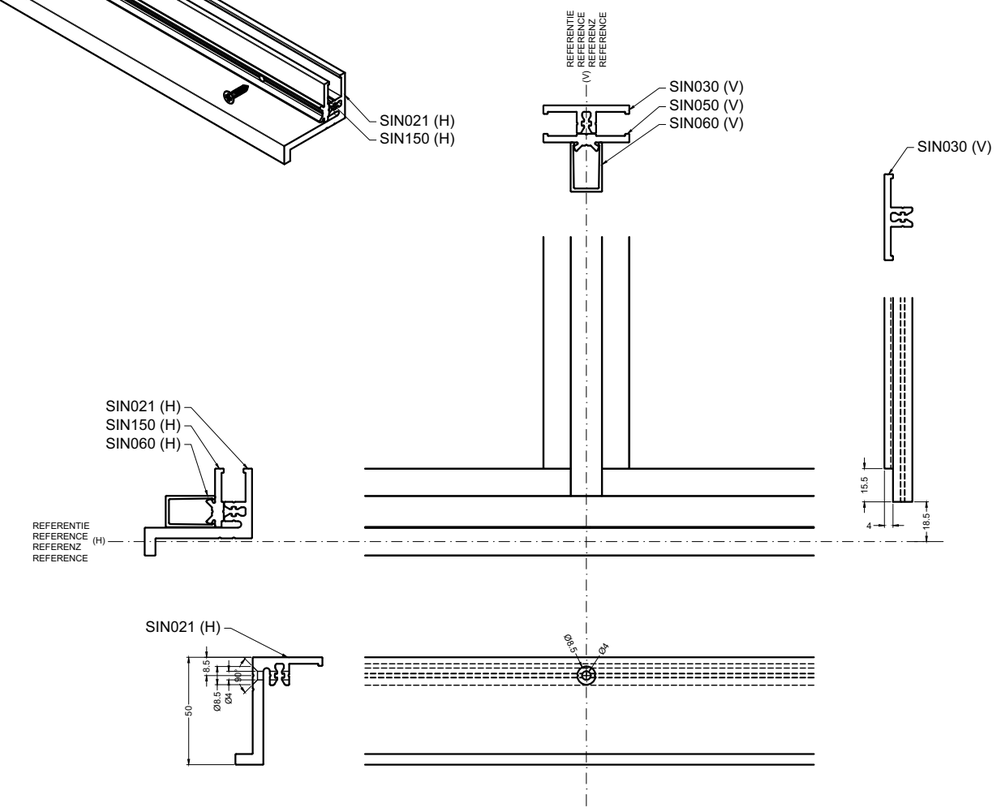


7B-MONTAGE SIN090

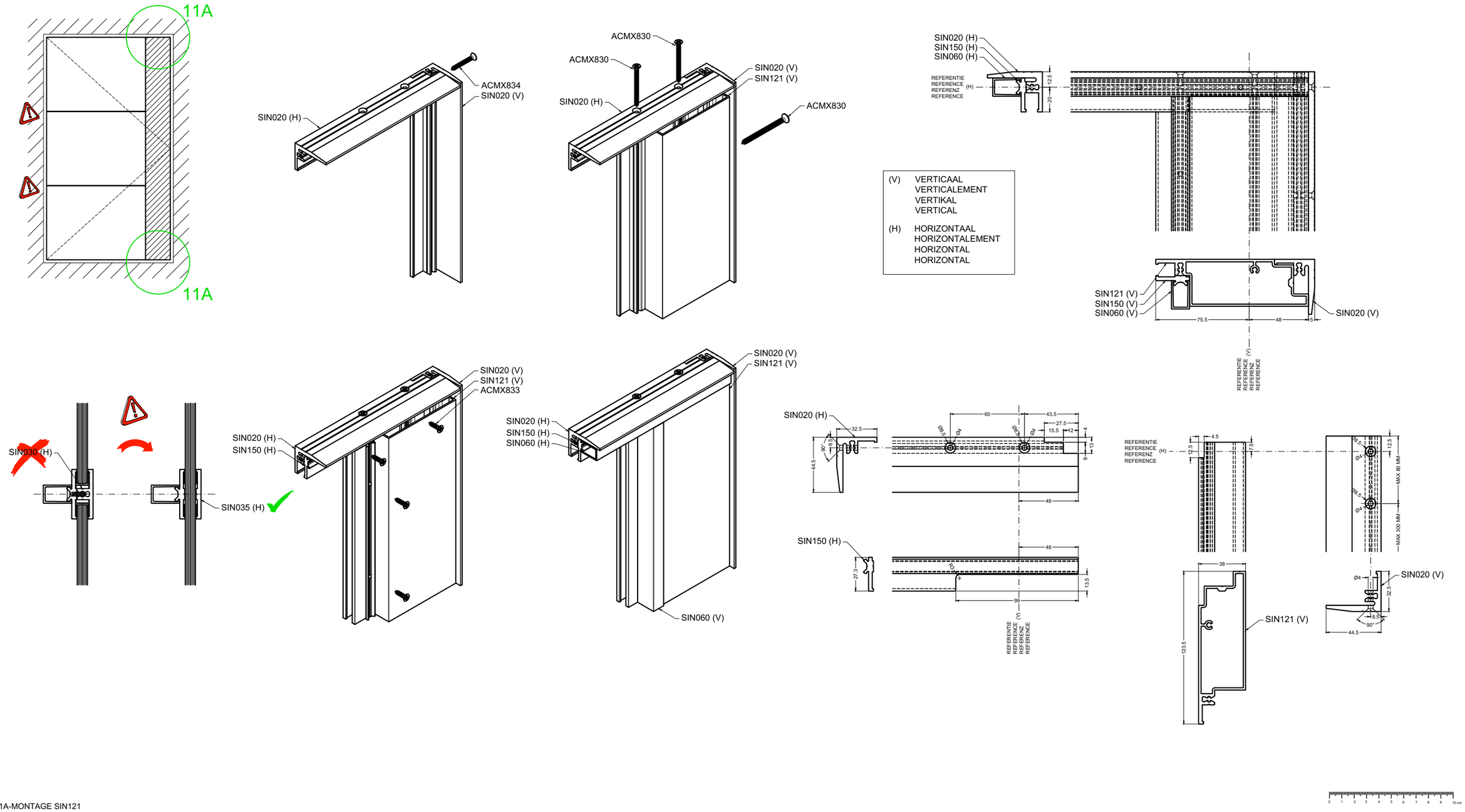


11A-MONTAGE SIN121

OVERZICHT INBOUW - PIVOTDEUR
APERCU MONTAGE - PORTE PIVOTANTE
UEBERSICHT BEFESTIGUNG - SCHWINGTEUR
OVERVIEW FITTING - PIVOT DOOR

**Inbouw in de ruwbouw**
De bevestiging aan de ruwbouw gebeurt ofwel rechtstreeks doorheen de profielen met bijvoorbeeld schroeven en pluggen, ofwel met behulp van bevestigingsankers.
- De bevestigingen mogen niet minder dan 40 mm van de wand van de ruwbouw worden aangebracht.
- De verankering mag geenszins het draagvermogen van de aangrenzende bouwonderdelen beïnvloeden.
- Alle verankeringen, voor zover niet uit aluminium of roestvrij staal, dienen afdoende tegen corrosie te zijn beschermd en mogen zelf ook geen aantasting van het aluminium veroorzaken.
- Er dienen aan alle zijden minstens 2 bevestigingen aangebracht te worden met een maximale afstand tot de hoek van 100 mm. De afstand van de bevestigingen onderling bedraagt maximum 500 mm.
- Op de plaatsen waar een tussenregel of tussenstijl op de zijstijl, boven- of onderregel aansluit, moet de verankering op maximum 100 mm naast de stijl- of regelaansluiting worden aangebracht.

**Montage dans le gros oeuvre**
La fixation au gros oeuvre se fait soit directement à travers les profiles avec par exemple des vis et des chevilles, soit à l'aide d'ancrages de fixation.
- Les fixations ne peuvent pas être appliquées à une distance inférieure à 40 mm du mur du gros oeuvre.
- L'ancrage ne peut surtout pas influencer la force portante des éléments de construction contigus.
- Tous les ancrages, pour autant qu'ils ne soient pas en aluminium ou en acier inoxydable, doivent être efficacement protégés contre la corrosion et ne peuvent pas corroder l'aluminium.
- De tous les côtés il doit y avoir au moins 2 fixations avec une distance maximale jusqu'à l'angle de 100 mm. La distance entre les fixations est de 500 mm au maximum.
- A l'endroit ou des profils T et des profils dormants se rencontrent, l'ancrage doit être appliqué à une distance maximale de 100 mm des deux côtés de profile T.
De cette façon, une dilatation ou un rétrécissement du profile T (dus aux fluctuations de température) sont possibles sans dégâts.

**Befestigung am Baukörper**
Die Befestigung am Baukörper erfolgt durch systemabhängige Befestigungsanker, Rohrrahmendübel oder andere Befestigungsteile.
- Beim Einsatz von Schrauben und Dübeln ist zu gewährleisten, dass die Mindestrandabstände 40 mm gemäß den Verarbeitungsrichtlinien der Befestigungshersteller eingehalten werden.
- Verankerungen sollen aus Aluminium oder Edelstahl bzw. korrosionsgeschützt sein, damit die Aluminiumprofile nicht angegriffen werden.
- Rahmenseite müssen mind. zwei Befestigungen eingebracht werden. Der max. Abstand zur Rahmenecke darf 100 mm nicht unterschreiten. Der max. Abstand der Befestigungspunkte untereinander darf 500 mm nicht unterschreiten.
- Im Bereich von Pfosten- und Riegelanschluss sind die Befestigungspunkte ebenfalls 100 mm aus der Ecke vorzunehmen. Es wird empfohlen, die Befestigungspunkte in den Bereich der Eck- und Scherenlager.

**Fitting in the structural work**
The fixing to the structural work is done either directly through the profiles by means of for instance screws and plugs, or by means of fixing lugs.
- The fixings may not be applied less than 40 mm of the wall of the structural work.
- The anchoring may in no way influence the bearing power of the adjacent building parts.
- All anchoring, as far as they are not made of Aluminum or stainless steel, should be adequately corrosion protected and may not attack the Aluminum themselves.
- At least two fixings should be applied on all sides; the maximum distance to the corner is at least 100 mm. The distance between the fixings is maximum 500 mm.
- Where transom/mullions and outer frame profiles meet, the fixing must be applied maximum 100 mm from both sides of the transom/mullion.

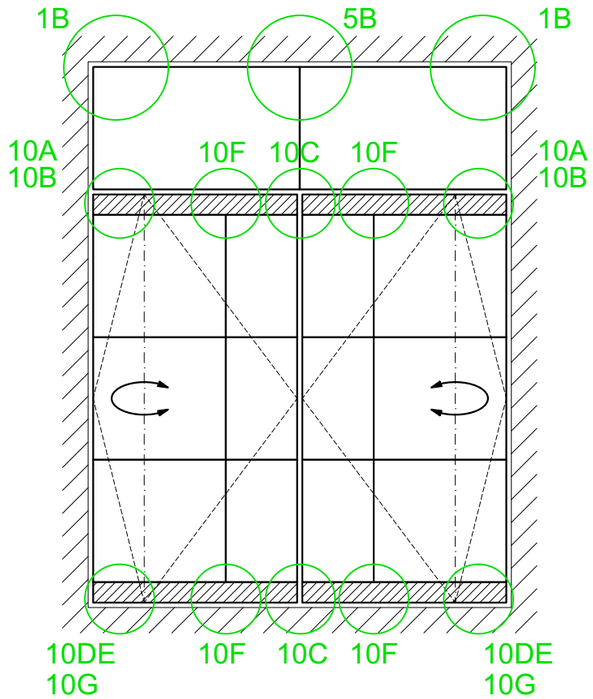

PIVOTDEUR NAAR BINNEN DRAAIENDE
PORTE PIVOTANTE OUVRANT VERS L'INTERIEUR
SCHWINGTEUR NACH INNEN OEFFNENDE
INWARD OPENING PIVOT DOOR

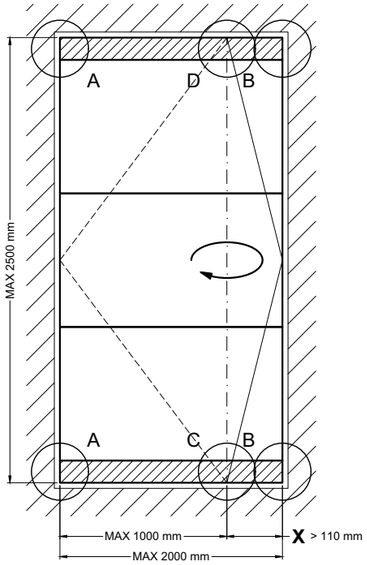


ENKELE PENDELDEUR
PORTE VA ET VIENT SIMPLE
EINIGE PENDELTUR
SINGLE SWINGDOOR

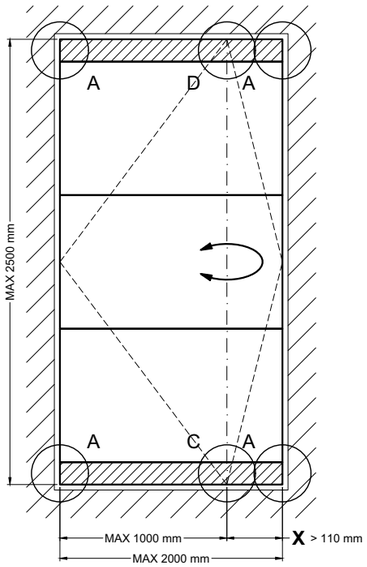


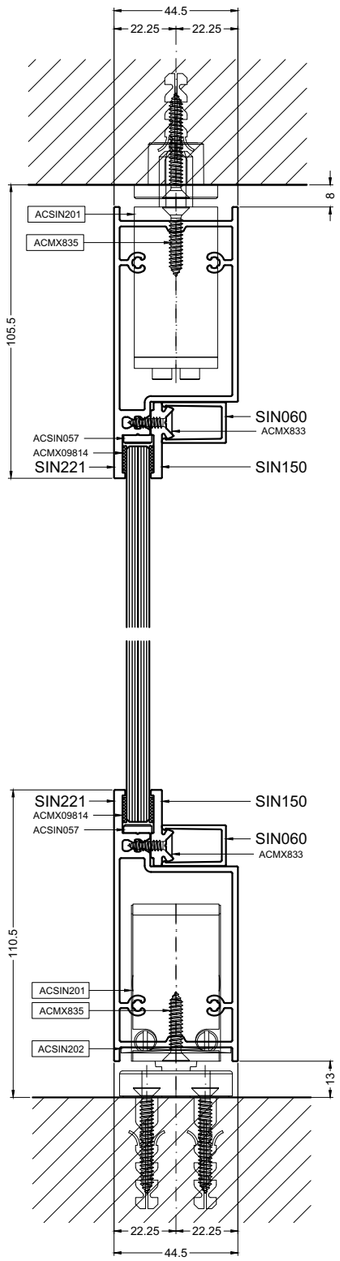


## ACSIN201 (+ 2 x ACSIN202)

| | |
|---|---|
| MAXIMAAL VLEUGELGEWICHT<br>POIDS MAXIMUM PAR VANTAIL<br>MAXIMAL FLUGELGEWICHT<br>MAX. WEIGHT OF THE VENT | 100 kg |

DETAIL A

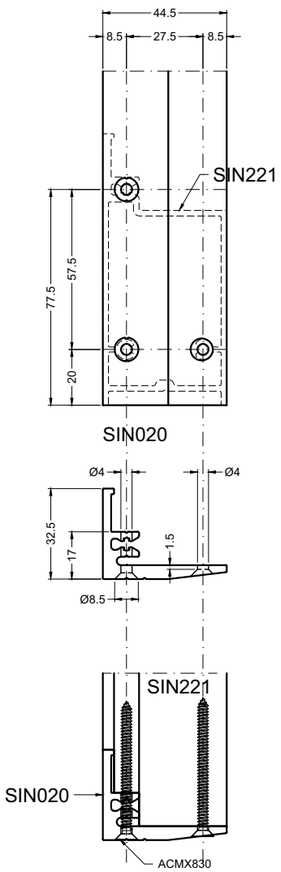


DETAIL B

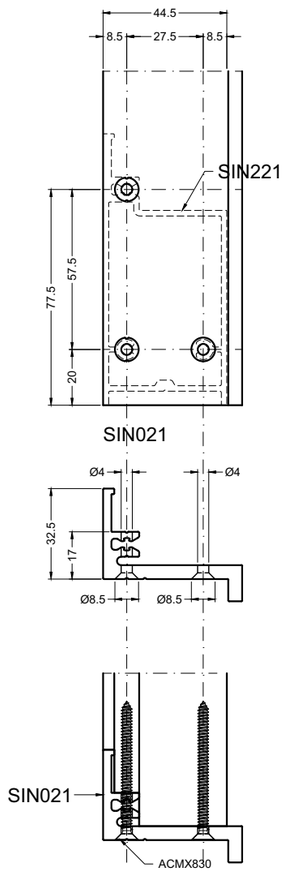


DETAIL C

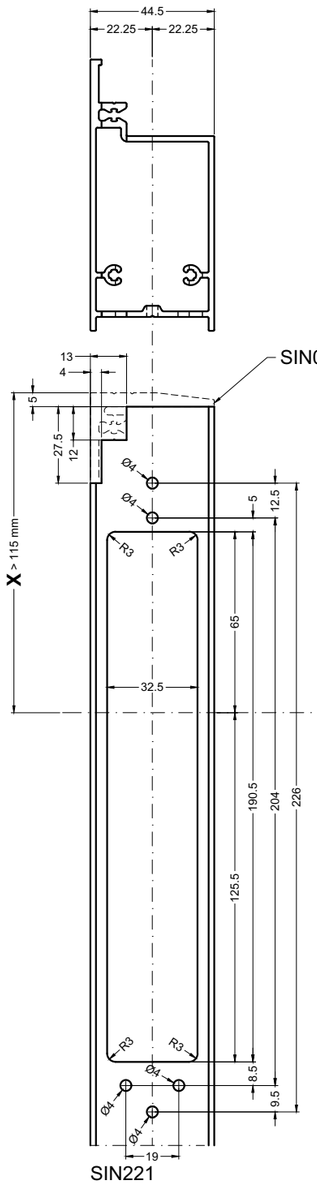


DETAIL D

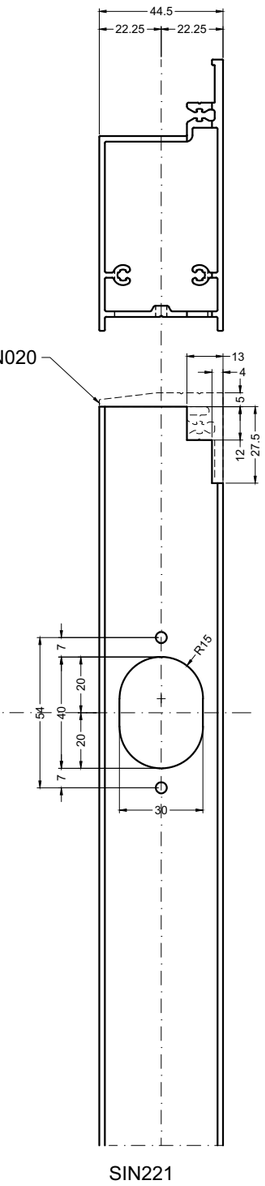


MONTAGE TAATS002

aliplast
member of
CORIALIS

IDA

PIVOTDEUR NAAR BINNEN DRAAIENDE
PORTE PIVOTANTE OUVRANT VERS L'INTERIEUR
SCHWINGTEUR NACH INNEN OEFFNENDE
INWARD OPENING PIVOT DOOR

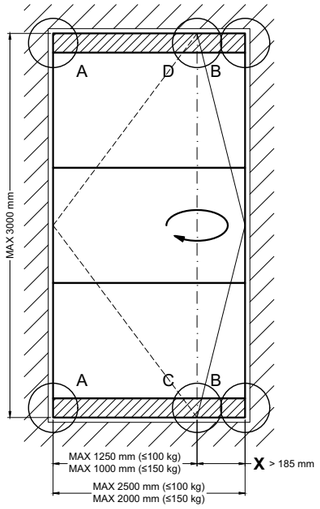


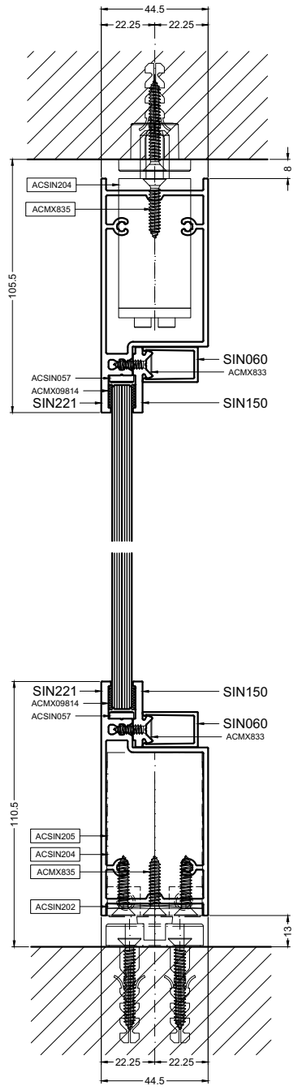


ENKELE PENDELDEUR
PORTE VA ET VIENT SIMPLE
EINIGE PENDELTUR
SINGLE SWINGDOOR

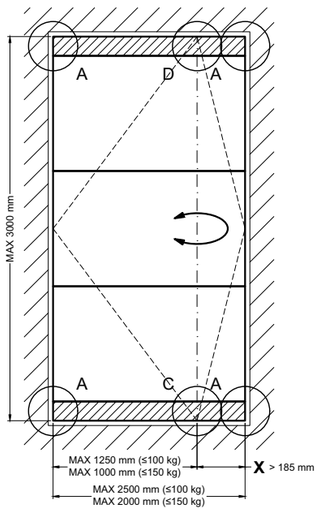


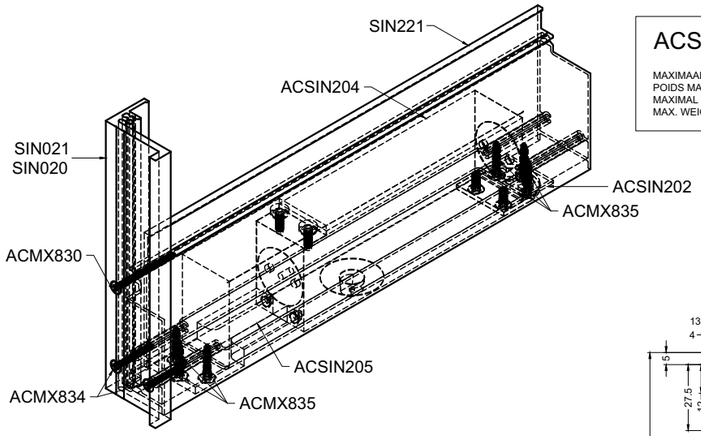


ACSIN204 (+ 1 x ACSIN205 & 1 x ACSIN202)

| | |
|---|---|
| MAXIMAAL VLEUGELGEWICHT<br>POIDS MAXIMUM PAR VANTAIL<br>MAXIMAL FLUGELGEWICHT<br>MAX. WEIGHT OF THE VENT | (*)100 kg<br>150 kg |

DETAIL A

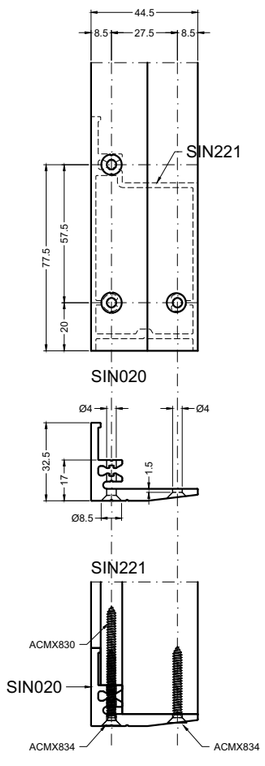


DETAIL B

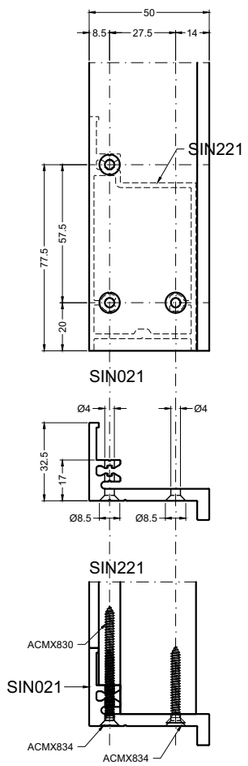


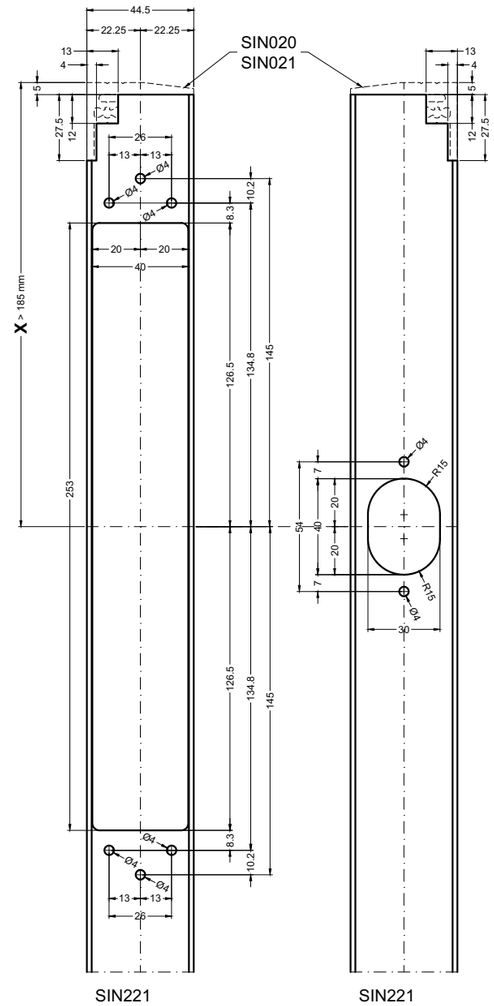


MONTAGE TAATS004



aliplast
member of
CORIALIS

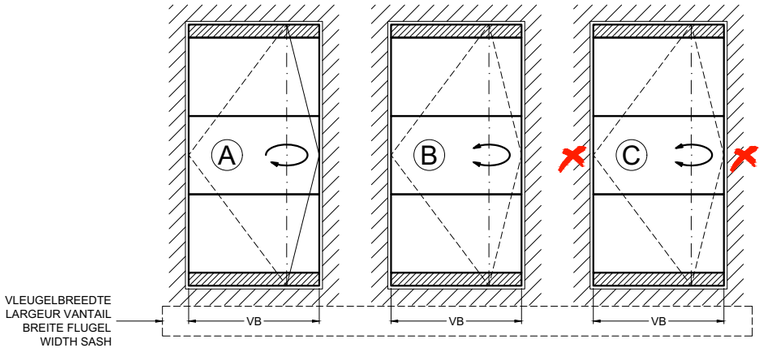


| ACSIN201 (+ 2 x ACSIN202) | |
|---|---|
| MAXIMAAL VLEUGELGEWICHT<br>POIDS MAXIMUM PAR VANTAIL<br>MAXIMAL FLUGELGEWICHT<br>MAX. WEIGHT OF THE VENT | 100 kg |

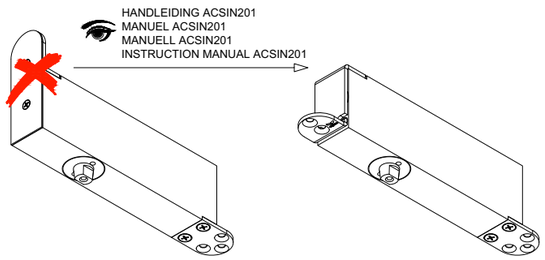


ONDER
DESSOUS
UNTER
BELOW

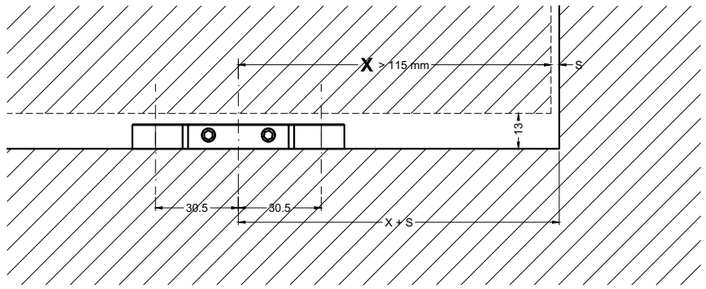


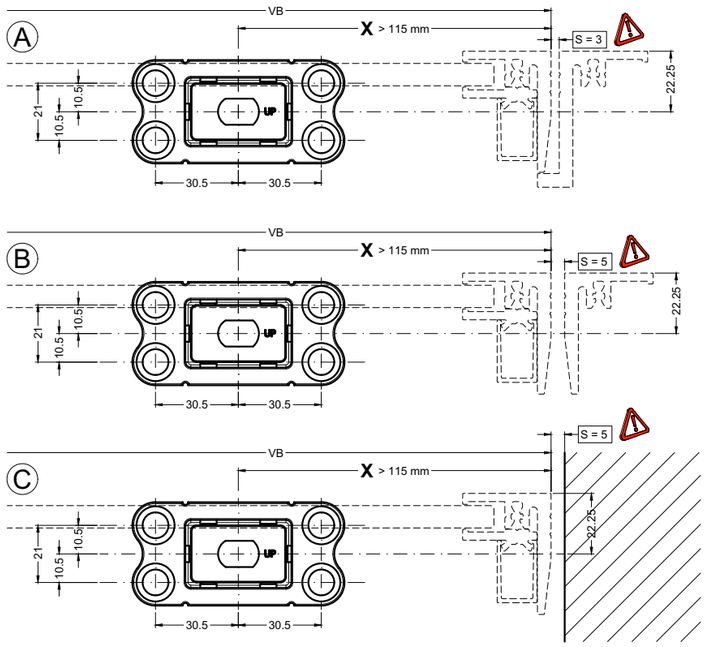


BOVEN
AU-DESSUS
OBEN
UPPER

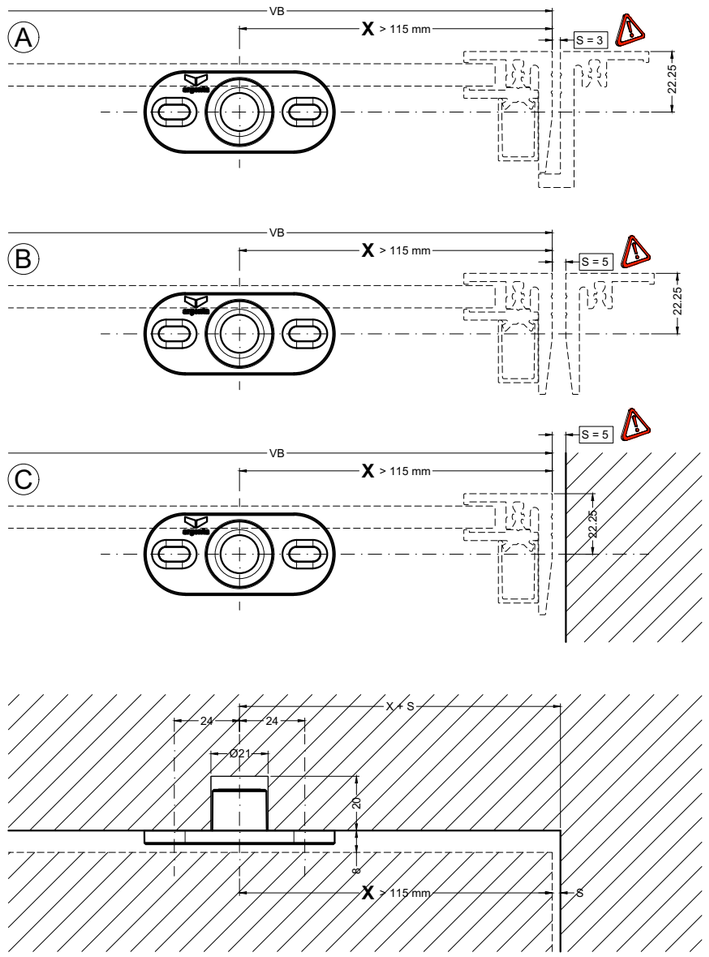


MONTAGE TAATS003

aliplast member of CORIALIS

IDA

## ACSIN204 (+ 1 x ACSIN205 & 1 x ACSIN202)

| | |
|---|---|
| MAXIMAAL VLEUGELGEWICHT<br>POIDS MAXIMUM PAR VANTAIL | (*)100 kg |
| MAXIMAL FLUGELGEWICHT<br>MAX. WEIGHT OF THE VENT | 150 kg |

ONDER
DESSOUS
UNTER
BELOW

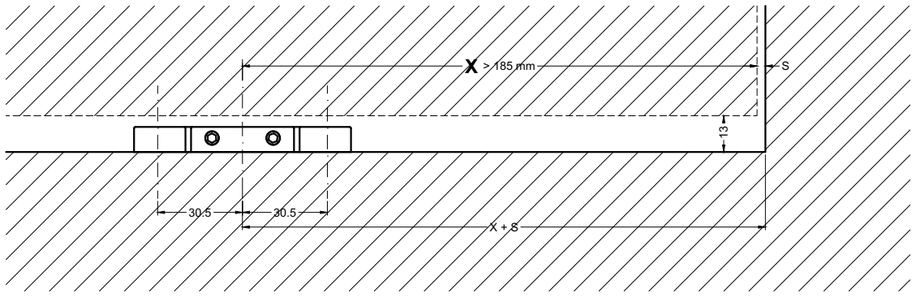


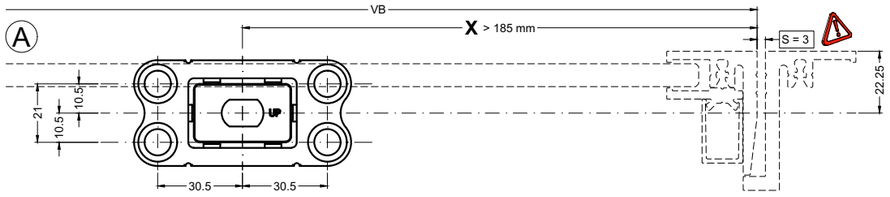


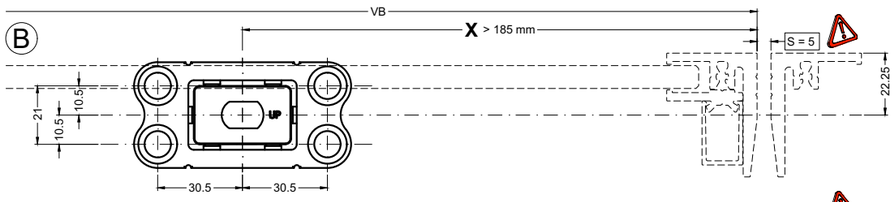


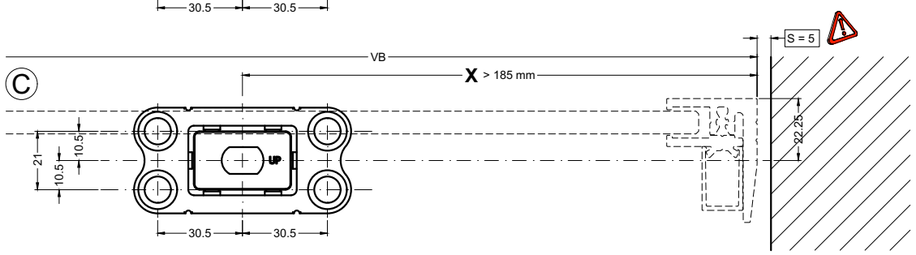


BOVEN
AU-DESSUS
OBEN
UPPER

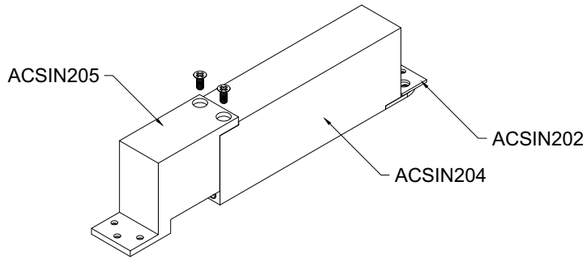


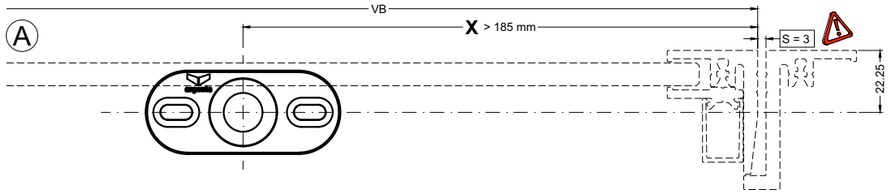


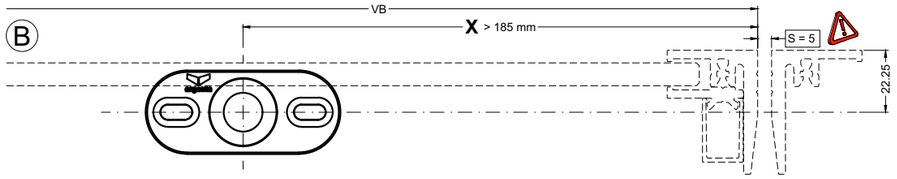


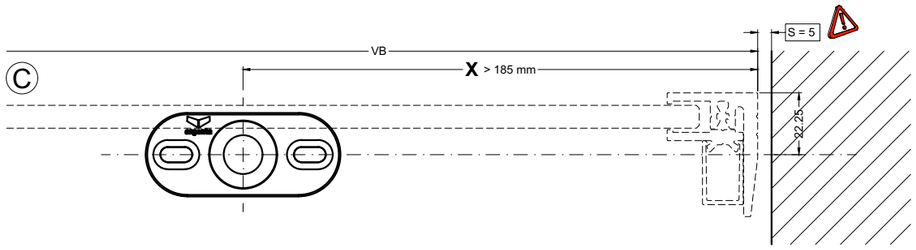


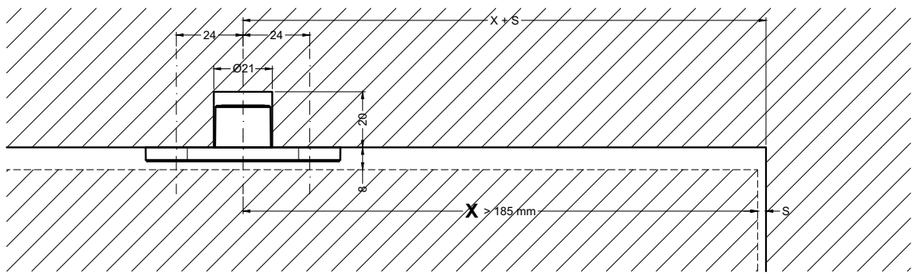


MONTAGE TAATS005



aliplast
member of
CORIALIS

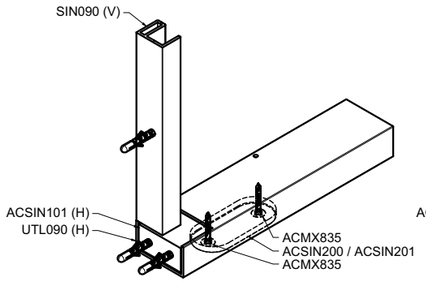


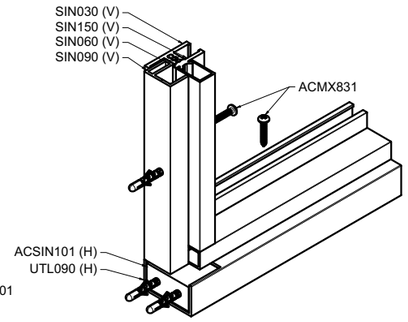


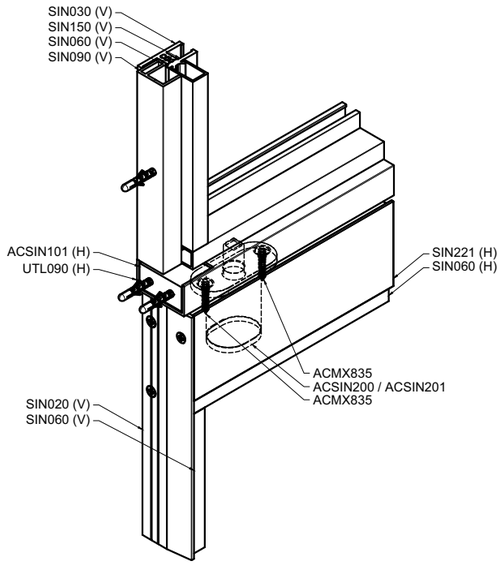


| | |
|---|---|
| (V) | VERTICAAL<br>VERTICALEMENT<br>VERTIKAL<br>VERTICAL |
| (H) | HORIZONTAAL<br>HORIZONTALEMENT<br>HORIZONTAL<br>HORIZONTAL |

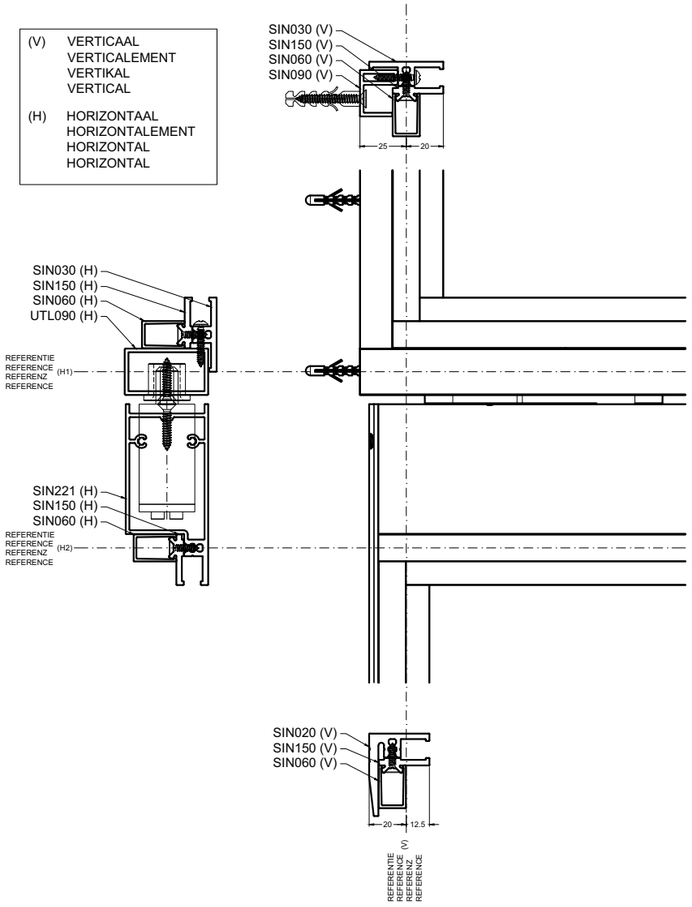


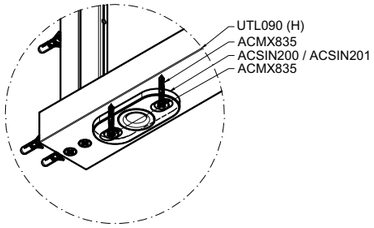


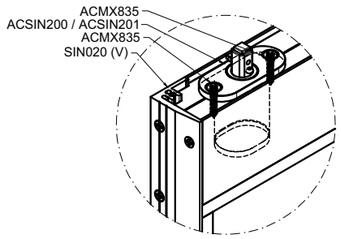


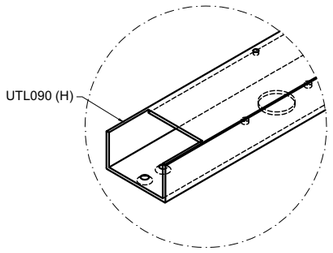


| ACSIN200 | |
|---|---|
| MAXIMAAL VLEUGELGEWICHT<br>POIDS MAXIMUM PAR VANTAIL<br>MAXIMAL FLUGELGEWICHT<br>MAX. WEIGHT OF THE VENT | **X** > 70 mm<br>**X** > 75 mm<br>60 kg* |

* max 45 kg om goede werking deurdruker te garanderen
max 45 kg pour garantir le bon fonctionnement du ferme-porte
max 45 kg um das ordnungsgemässe funktionieren der türschliesser sicherzustellen
max 45 kg to guarantee the good work of the door closer

| ACSIN201 (+ ACSIN202) | |
|---|---|
| MAXIMAAL VLEUGELGEWICHT<br>POIDS MAXIMUM PAR VANTAIL<br>MAXIMAL FLUGELGEWICHT<br>MAX. WEIGHT OF THE VENT | **X** > 115 mm<br>**X** > 120 mm<br>100 kg |

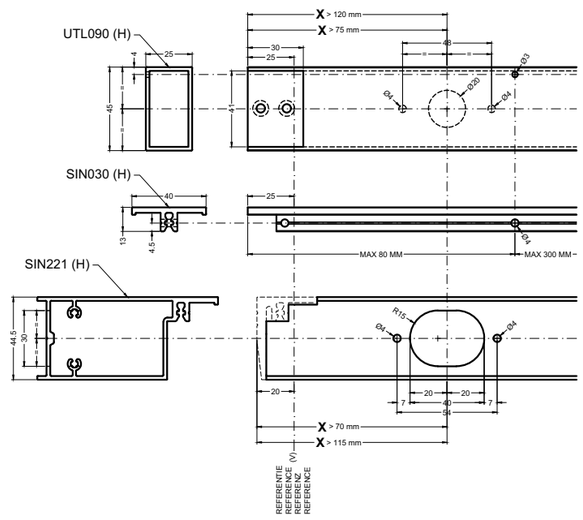


10A-MONTAGE UTL090

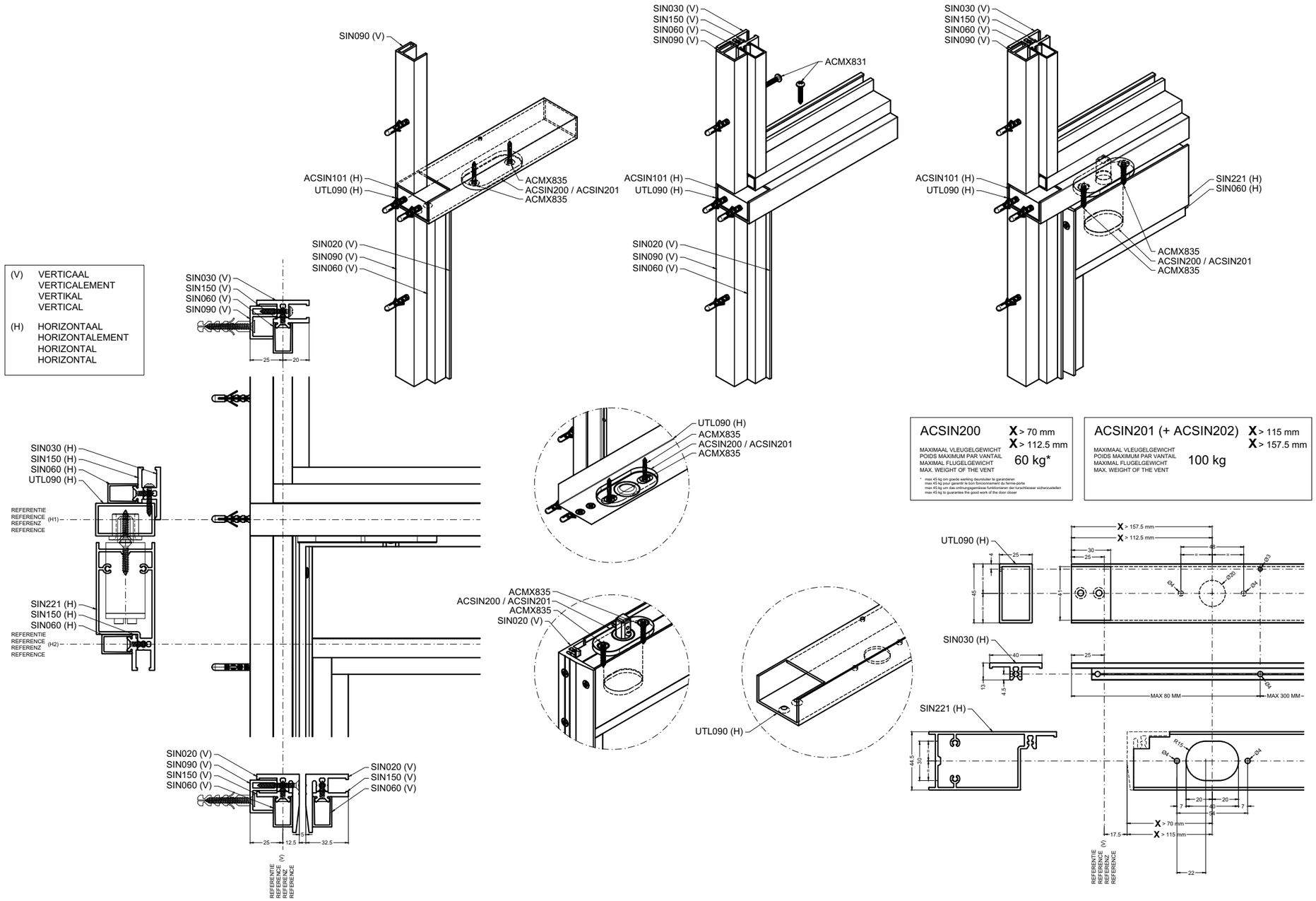


10B-MONTAGE UTL090

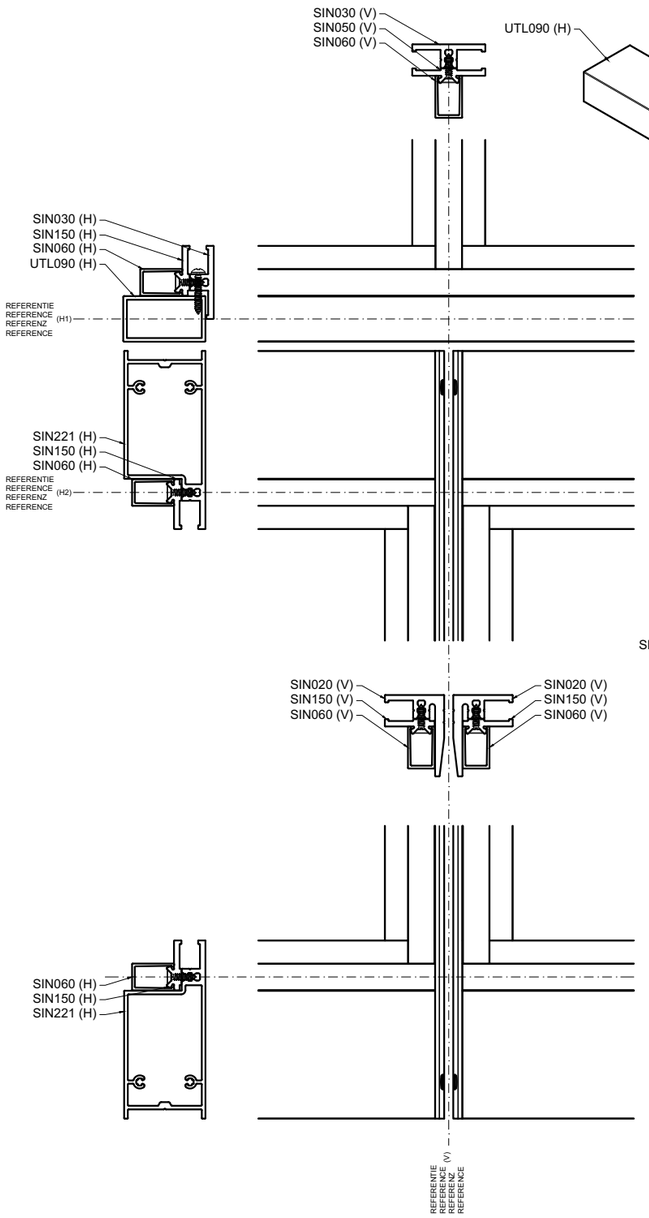


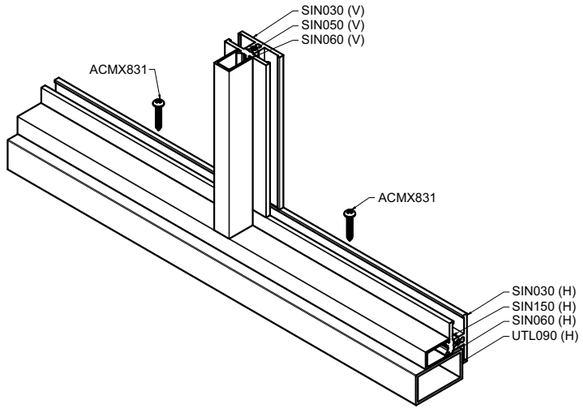


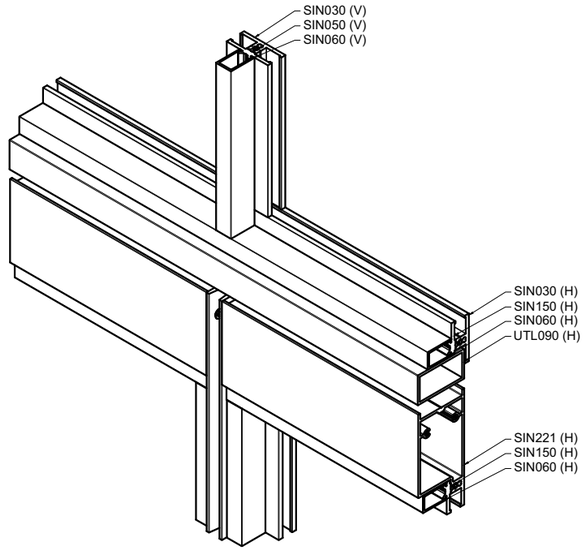


| | |
|---|---|
| (V) | VERTICAAL<br>VERTICALEMENT<br>VERTIKAL<br>VERTICAL |
| (H) | HORIZONTAAL<br>HORIZONTALEMENT<br>HORIZONTAL<br>HORIZONTAL |

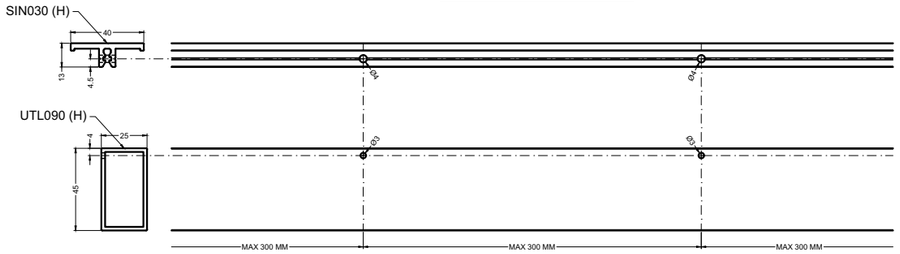


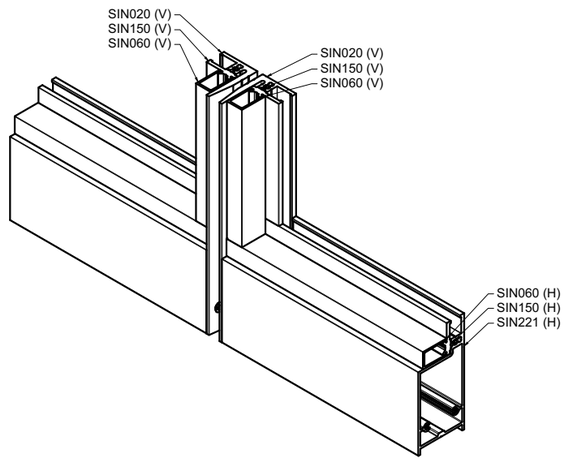


10C-MONTAGE UTL090

aliplast
member of
CORIALIS

# 10DE

## 10D

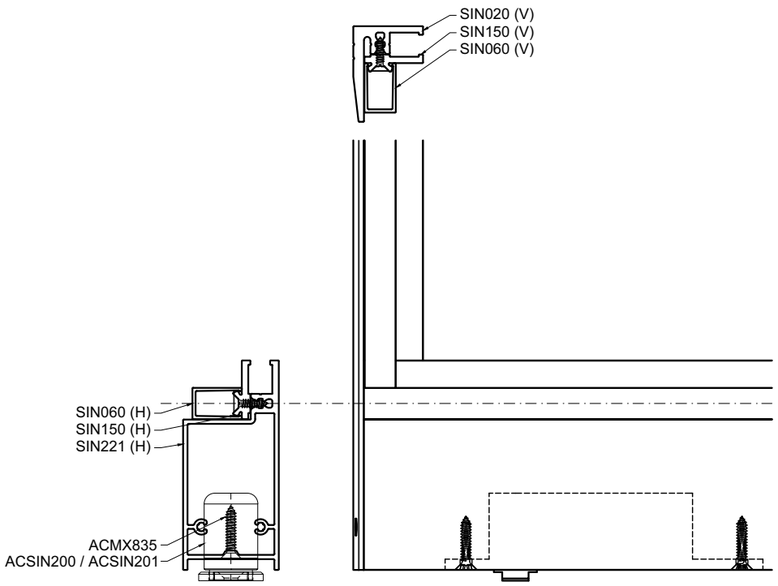


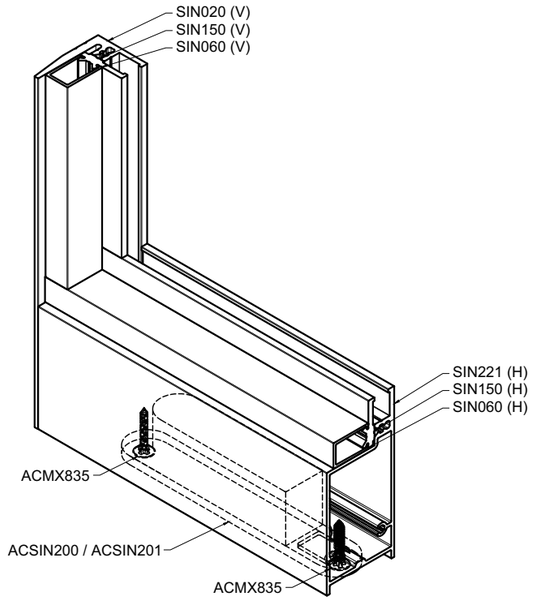


## 10E

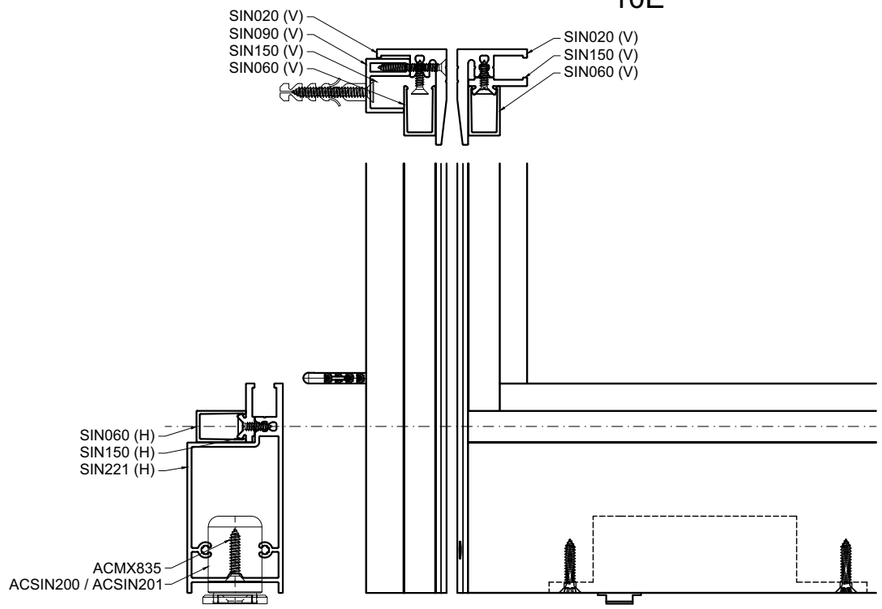


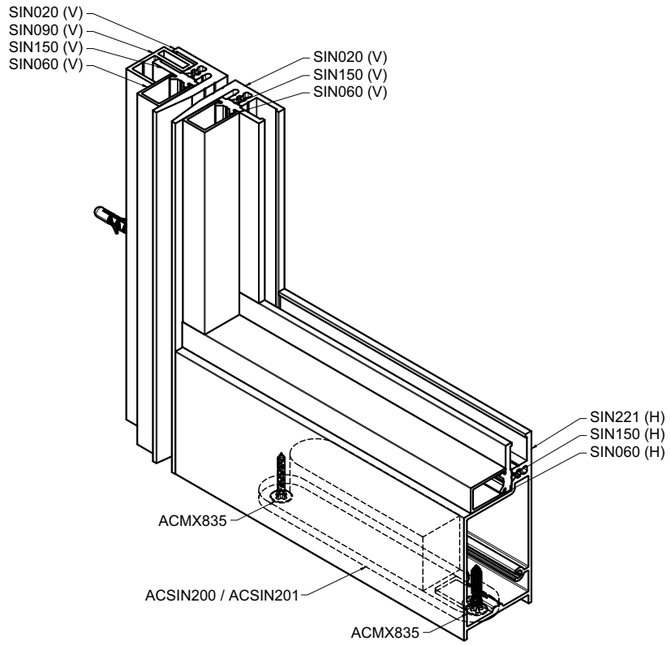


10DE-MONTAGE UTL090

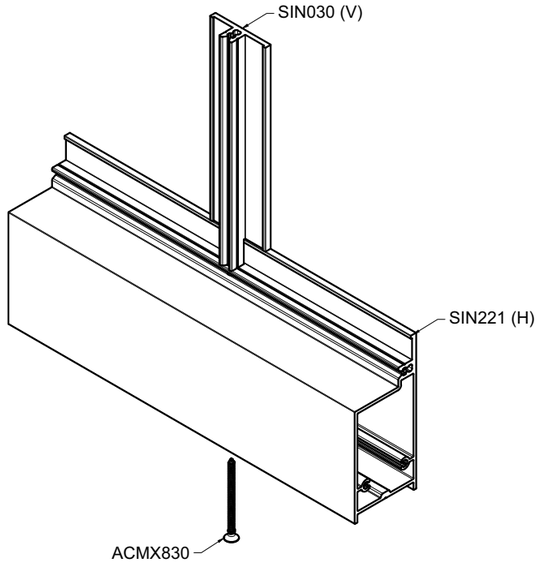


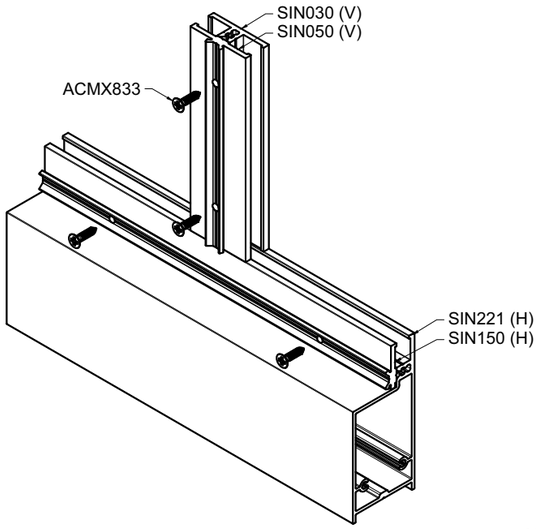


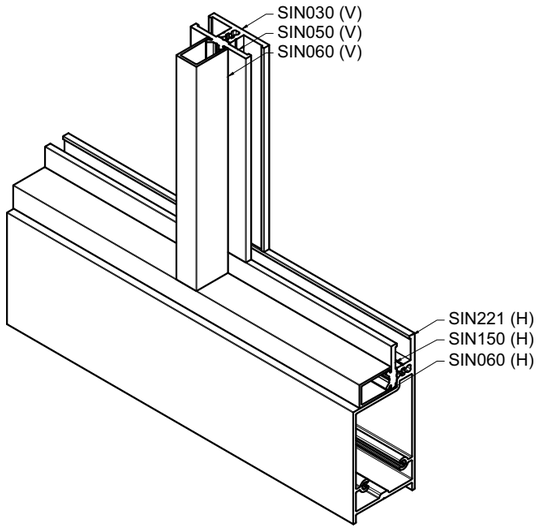


(V) VERTICAAL
VERTICALEMENT
VERTIKAL
VERTICAL

(H) HORIZONTAAL
HORIZONTALEMENT
HORIZONTAL
HORIZONTAL

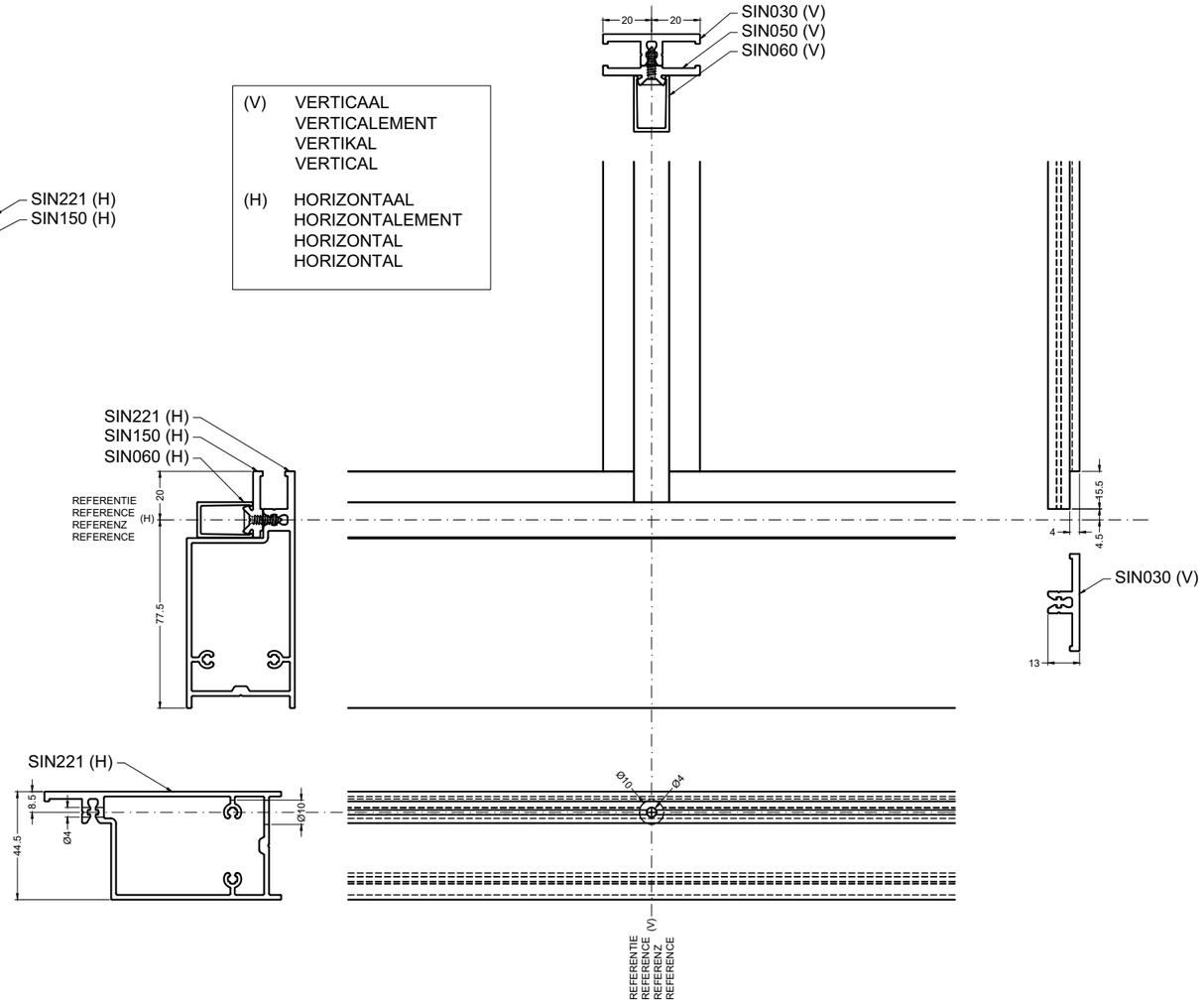


10F-MONTAGE SIN221

aliplast member of CORIALIS

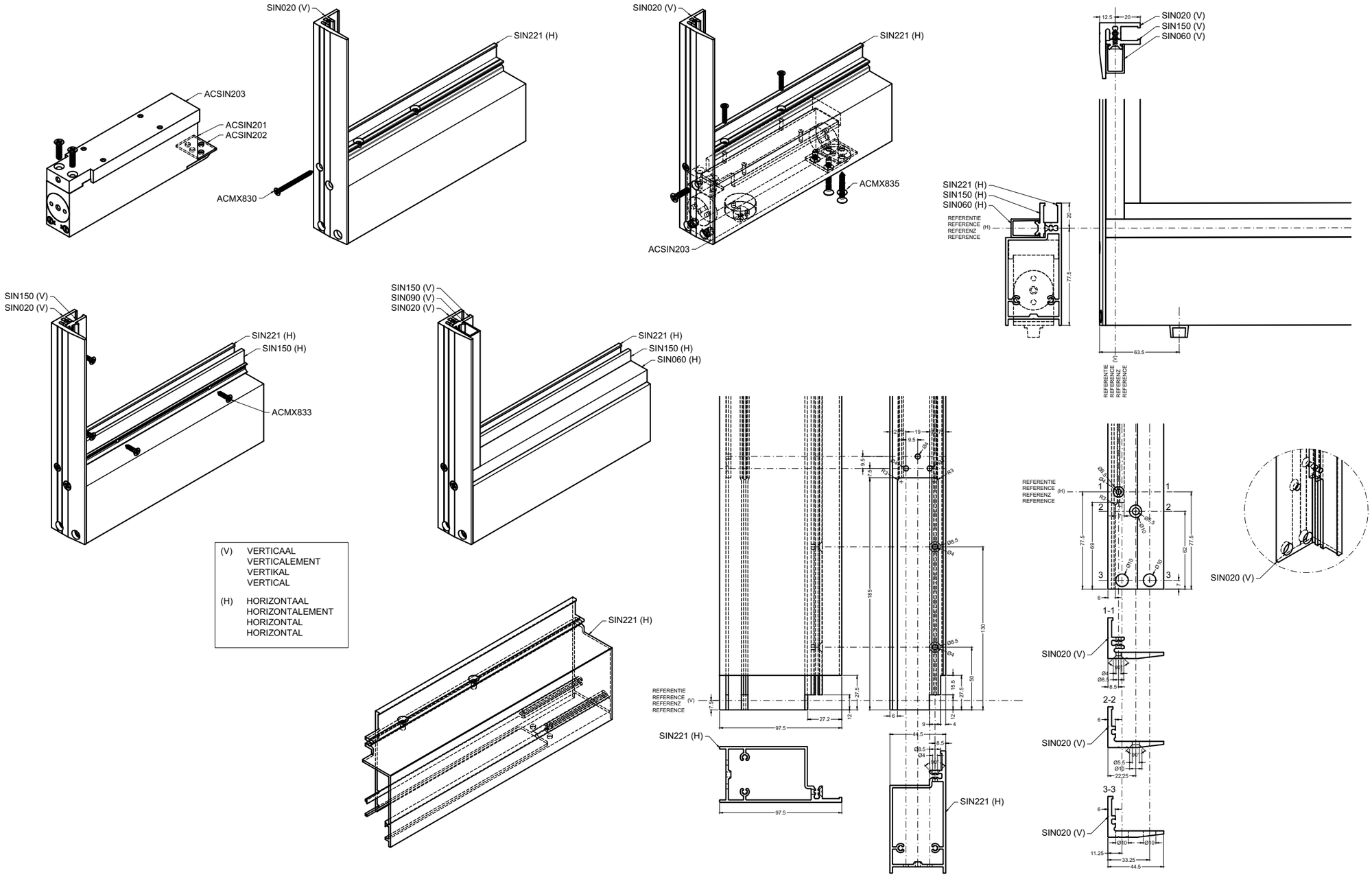


(V) VERTICAAL
VERTICALEMENT
VERTIKAL
VERTICAL

(H) HORIZONTAAL
HORIZONTALEMENT
HORIZONTAL
HORIZONTAL

10G-MONTAGE ACSIN203

OVERZICHT INBOUW - VERBORGEN SCHARNIER
APERCU MONTAGE - CHARNIERE CACHE
UEBERSICHT BEFESTIGUNG - VERBORGEN BAND
OVERVIEW FITTING - CONCEALED HINGE

**Inbouw in de ruwbouw**
De bevestiging aan de ruwbouw gebeurt ofwel rechtstreeks doorheen de profielen met bijvoorbeeld schroeven en pluggen, ofwel met behulp van bevestigingsankers.
- De bevestigingen mogen niet minder dan 40 mm van de wand van de ruwbouw worden aangebracht.
- De verankering mag geenszins het draagvermogen van de aangrenzende bouwonderdelen beïnvloeden.
- Alle verankeringen, voor zover niet uit aluminium of roestvrij staal, dienen afdoende tegen corrosie te zijn beschermd en mogen zelf ook geen aantasting van het aluminium veroorzaken.
- Er dienen aan alle zijden minstens 2 bevestigingen aangebracht te worden met een maximale afstand tot de hoek van 100 mm. De afstand van de bevestigingen onderling bedraagt maximum 500 mm.
- Op de plaatsen waar een tussenregel of tussenstijl op de zijstijl, boven- of onderregel aansluit, moet de verankering op maximum 100 mm naast de stijl- of regelaansluiting worden aangebracht.

**Montage dans le gros oeuvre**
La fixation au gros oeuvre se fait soit directement à travers les profiles avec par exemple des vis et des chevilles, soit à l'aide d'ancrages de fixation.
- Les fixations ne peuvent pas être appliquées à une distance inférieure à 40 mm du mur du gros oeuvre.
- L'ancrage ne peut surtout pas influencer la force portante des éléments de construction contigus.
- Tous les ancrages, pour autant qu'ils ne soient pas en aluminium ou en acier inoxydable, doivent être efficacement protégés contre la corrosion et ne peuvent pas corroder l'aluminium.
- De tous les côtés il doit y avoir au moins 2 fixations avec une distance maximale jusqu'à l'angle de 100 mm. La distance entre les fixations est de 500 mm au maximum.
- A l'endroit ou des profils T et des profils dormants se rencontrent, l'ancrage doit être appliqué à une distance maximale de 100 mm des deux côtés de profile T.
De cette façon, une dilatation ou un rétrécissement du profile T (dus aux fluctuations de température) sont possibles sans dégâts.

**Befestigung am Baukörper**
Die Befestigung am Baukörper erfolgt durch systemabhängige Befestigungsanker, Rohrrahmendübel oder andere Befestigungsteile.
- Beim Einsatz von Schrauben und Dübeln ist zu gewährleisten, dass die Mindestrandabstände 40 mm gemäß den Verarbeitungsrichtlinien der Befestigungshersteller eingehalten werden.
- Verankerungen sollen aus Aluminium oder Edelstahl bzw. korrosionsgeschützt sein, damit die Aluminiumprofile nicht angegriffen werden.
- Rahmenseite müssen mind. zwei Befestigungen eingebracht werden. Der max. Abstand zur Rahmenecke darf 100 mm nicht unterschreiten. Der max. Abstand der Befestigungspunkte untereinander darf 500 mm nicht unterschreiten.
- Im Bereich von Pfosten- und Riegelanschluss sind die Befestigungspunkte ebenfalls 100 mm aus der Ecke vorzunehmen. Es wird empfohlen, die Befestigungspunkte in den Bereich der Eck- und Scherenlager.

**Fitting in the structural work**
The fixing to the structural work is done either directly through the profiles by means of for instance screws and plugs, or by means of fixing lugs.
- The fixings may not be applied less than 40 mm of the wall of the structural work.
- The anchoring may in no way influence the bearing power of the adjacent building parts.
- All anchoring, as far as they are not made of Aluminum or stainless steel, should be adequately corrosion protected and may not attack the Aluminum themselves.
- At least two fixings should be applied on all sides; the maximum distance to the corner is at least 100 mm. The distance between the fixings is maximum 500 mm.
- Where transom/mullions and outer frame profiles meet, the fixing must be applied maximum 100 mm from both sides of the transom/mullion.

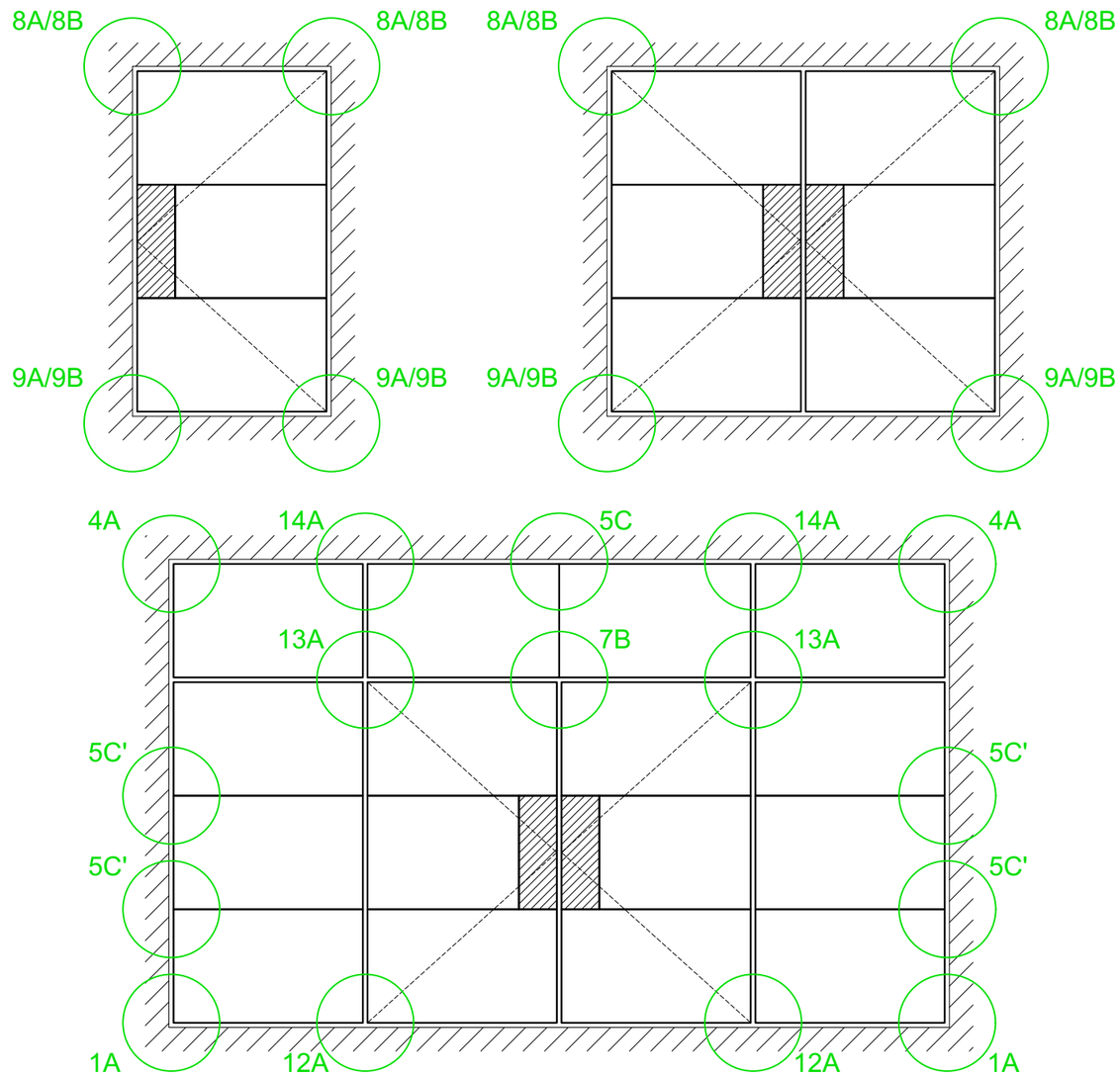


WERKTEKENINGEN - DESSINS DE CONSTRUCTION - KONSTRUKTIONZEICHNUNGEN - CONSTRUCTION DRAWINGS

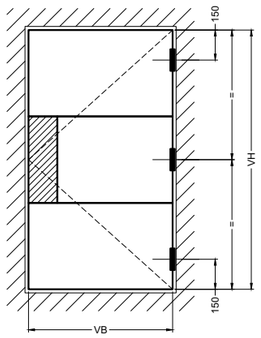


| | | | |
|---|---|---|---|
| VB | VLEUGELBREEDTE<br>LARGEUR VANTAIL<br>BREITE FLUGEL<br>WIDTH SASH | MAX 1000 MM | MAX 60 Kg |
| VH | VLEUGELHOOGTE<br>HAUTEUR D'OUVRANT<br>FLUGEL HOHE<br>VENT HEIGHT | MAX 2300 MM | |

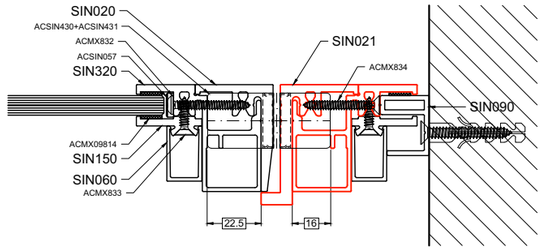


SIN021

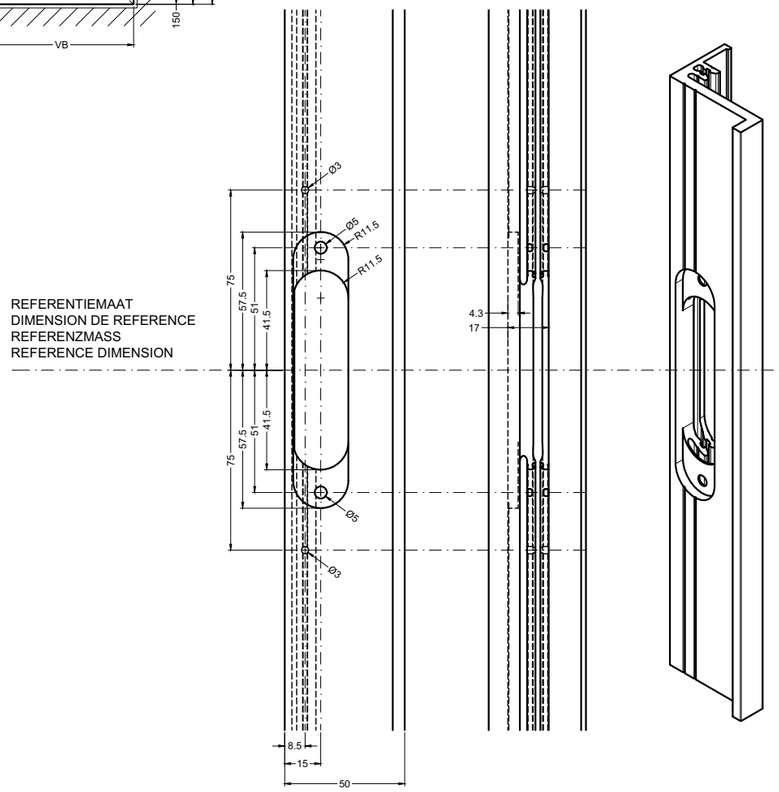


SIN320

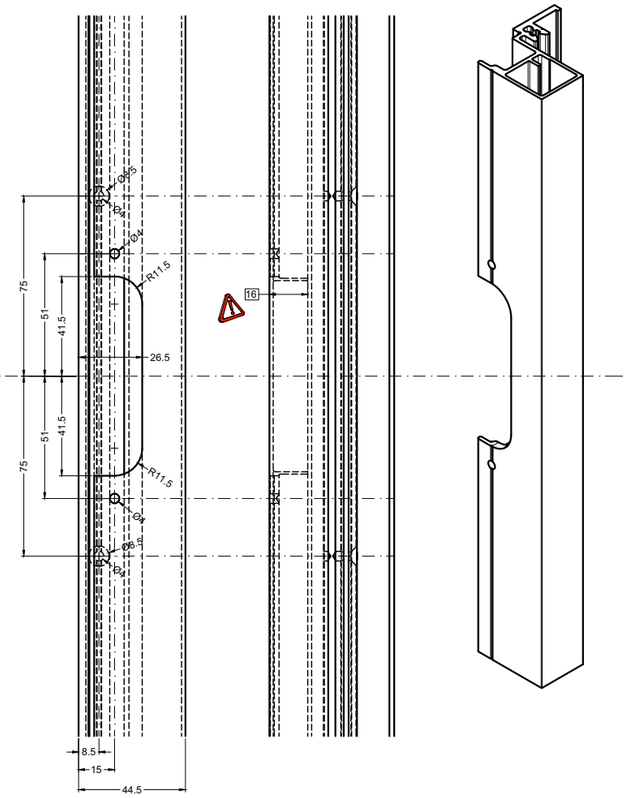


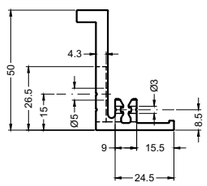


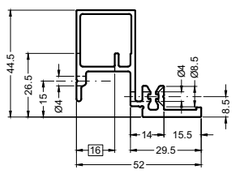


MONTAGE ACSIN430_1

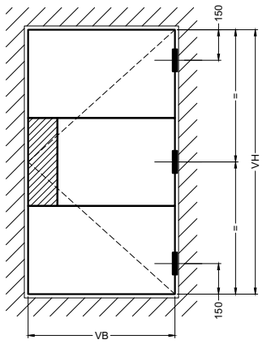


| | | | |
|---|---|---|---|
| VB | VLEUGELBREEDTE<br>LARGEUR VANTAIL<br>BREITE FLUGEL<br>WIDTH SASH | MAX 1000 MM | MAX 60 Kg |
| VH | VLEUGELHOOGTE<br>HAUTEUR D'OUVRANT<br>FLUGEL HOHE<br>VENT HEIGHT | MAX 2300 MM | |

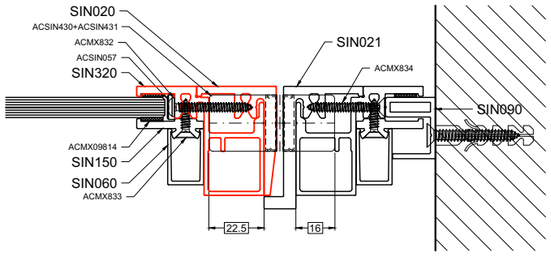


REFERENTIEMAAT
DIMENSION DE REFERENCE
REFERENZMASS
REFERENCE DIMENSION

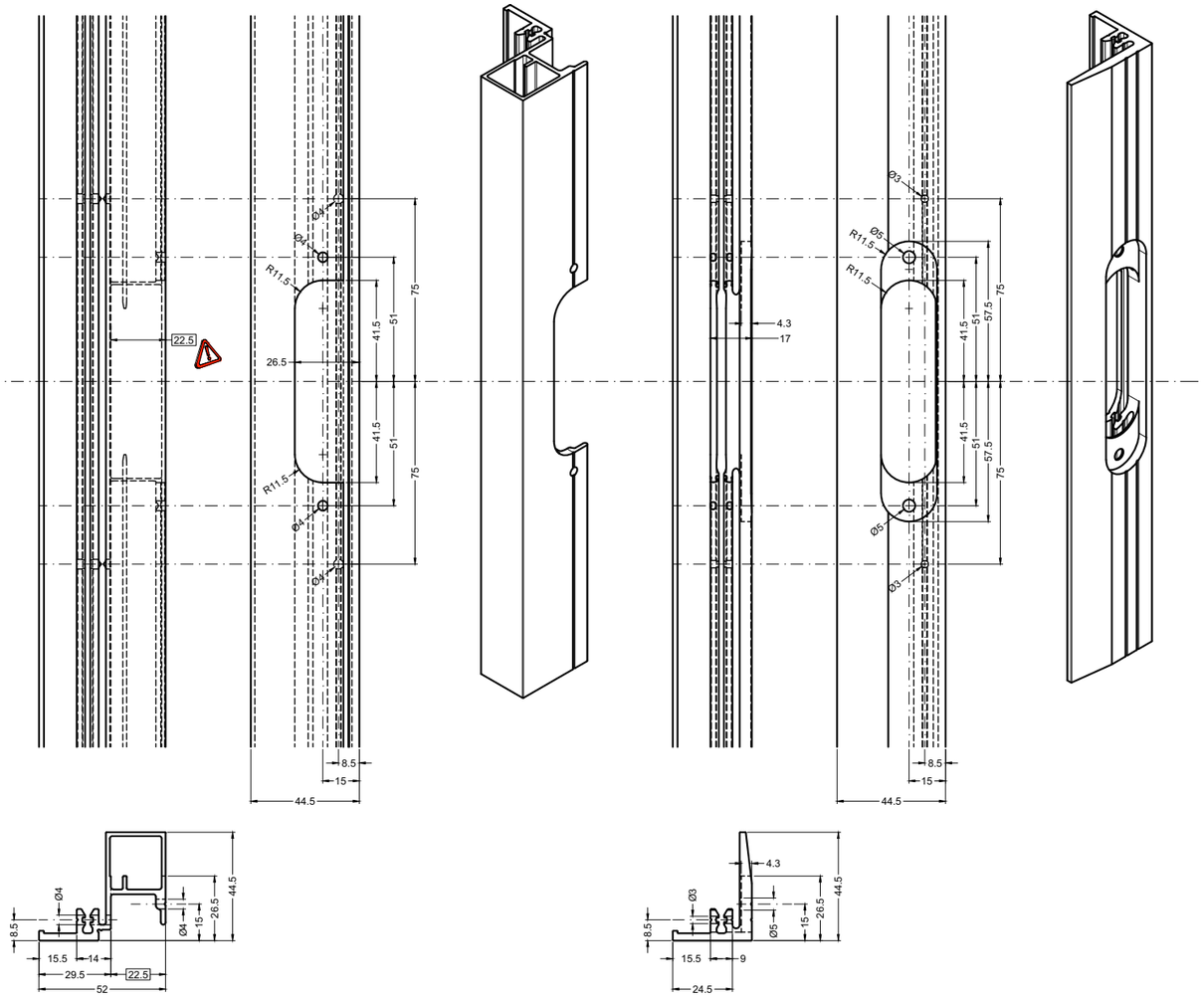


MONTAGE ACSIN430_2

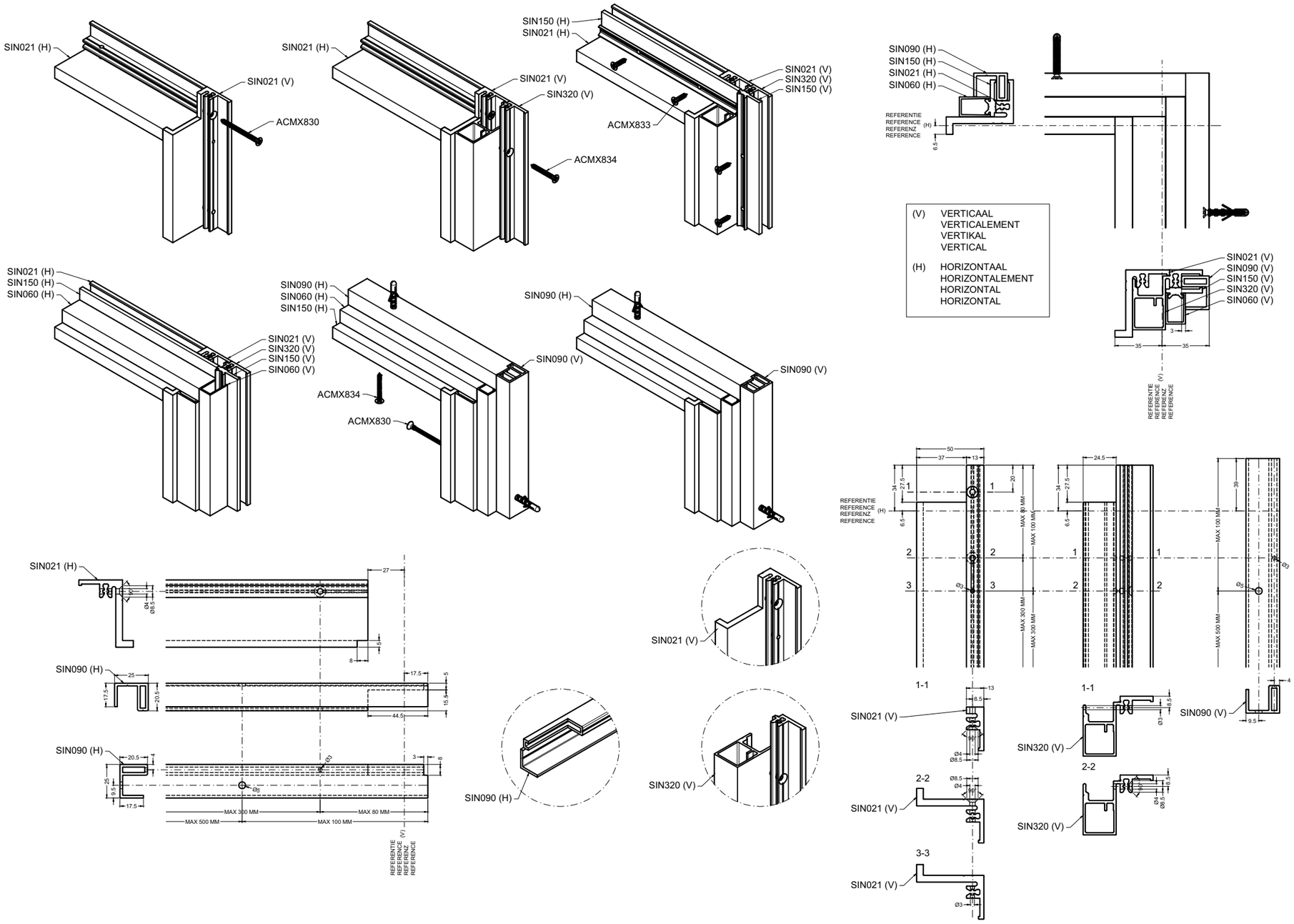


8A-MONTAGE BUITENKADER BOVEN

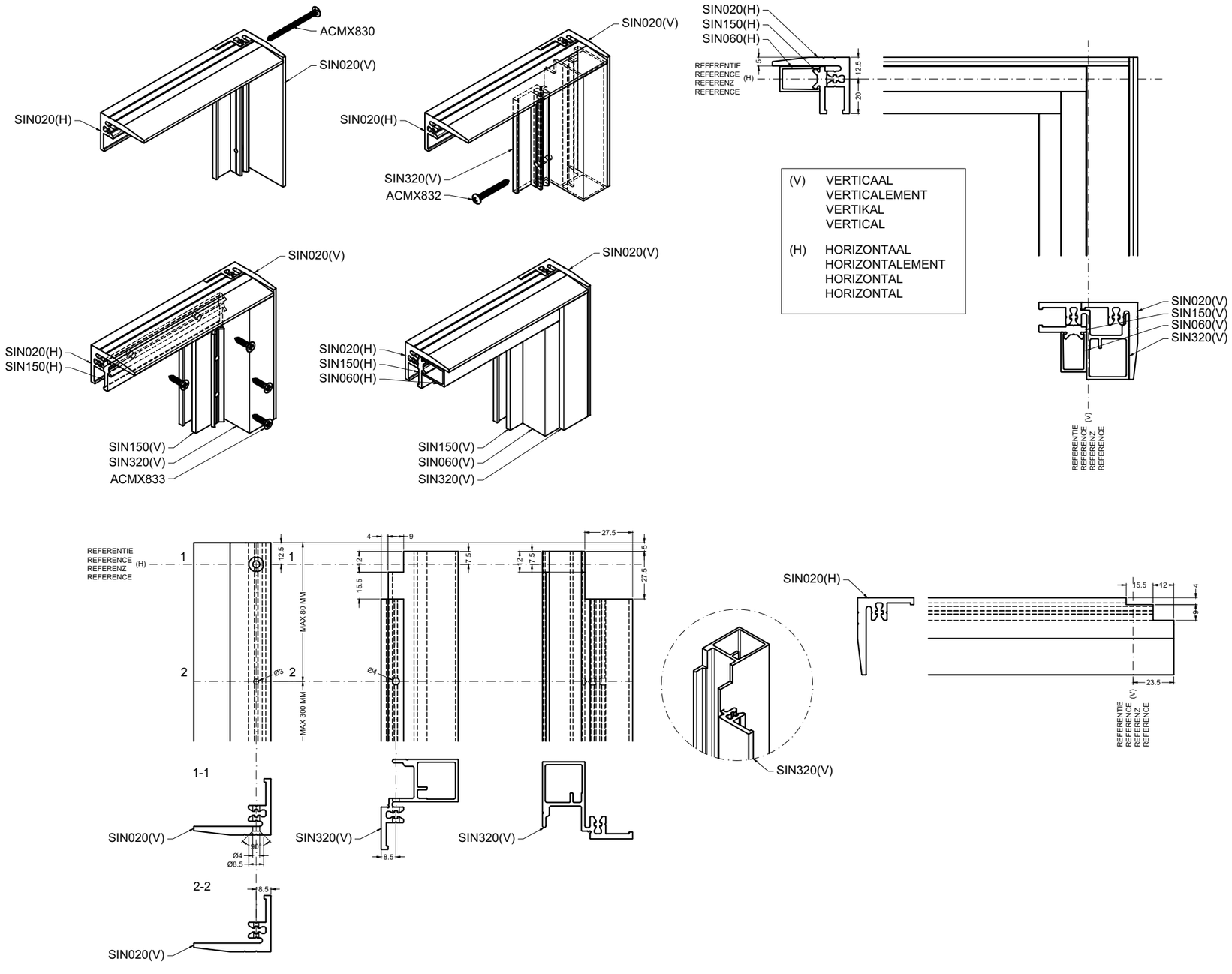


8B-MONTAGE VLEUGEL BOVEN

aliplast member of CORIALIS

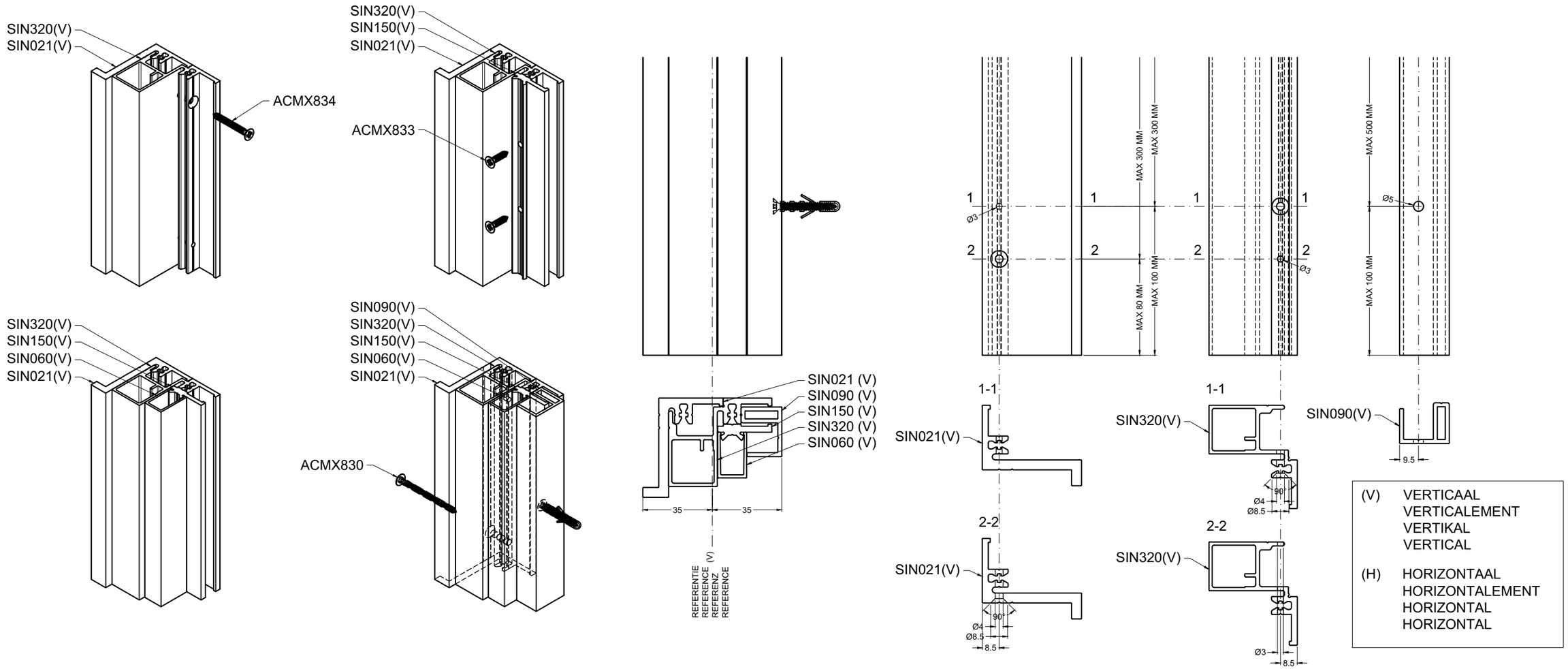


9A-MONTAGE BUITENKADER ONDER

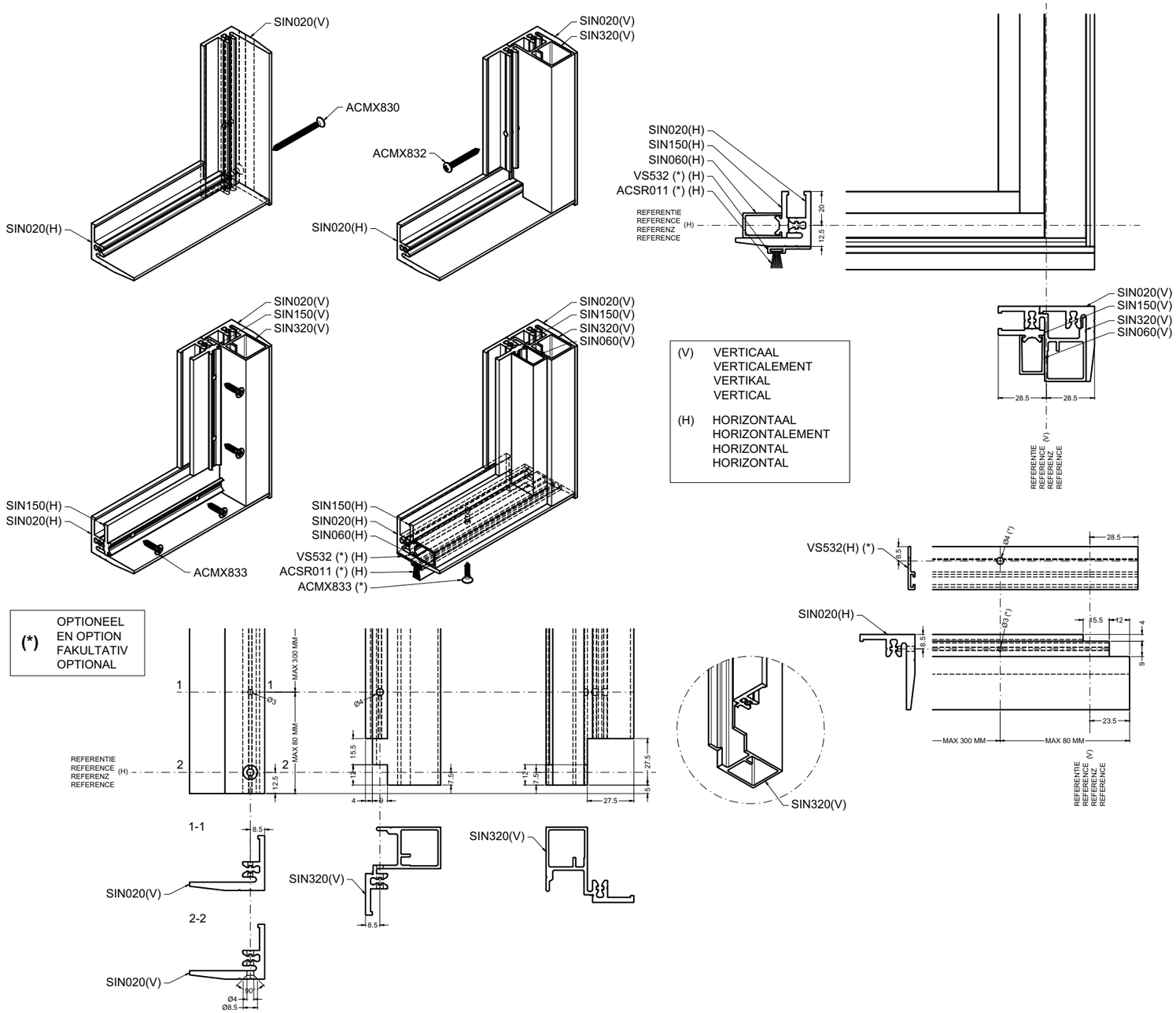


9B-MONTAGE VLEUGEL ONDER

aliplast member of CORIALIS

WERKTEKENINGEN - DESSINS DE CONSTRUCTION - KONSTRUKTIONZEICHNUNGEN - CONSTRUCTION DRAWINGS

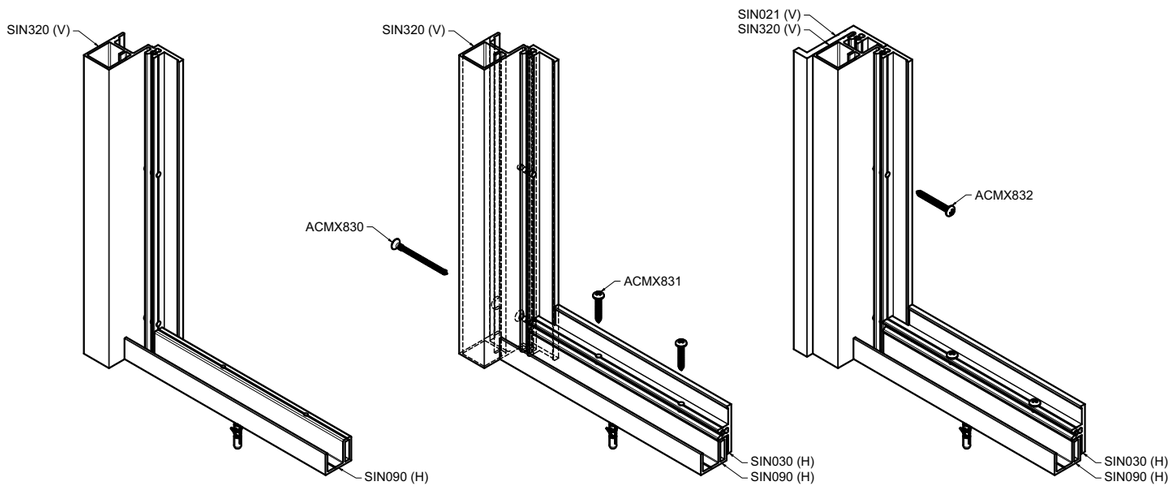


(V) VERTICAAL
VERTICALEMENT
VERTIKAL
VERTICAL

(H) HORIZONTAAL
HORIZONTALEMENT
HORIZONTAL
HORIZONTAL

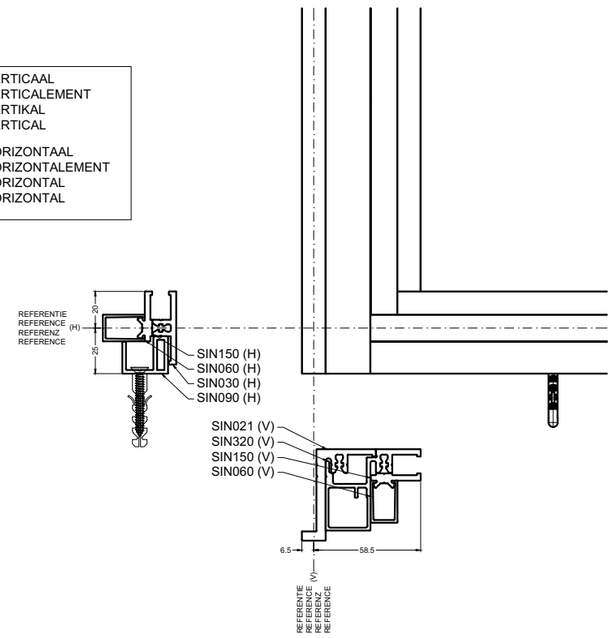


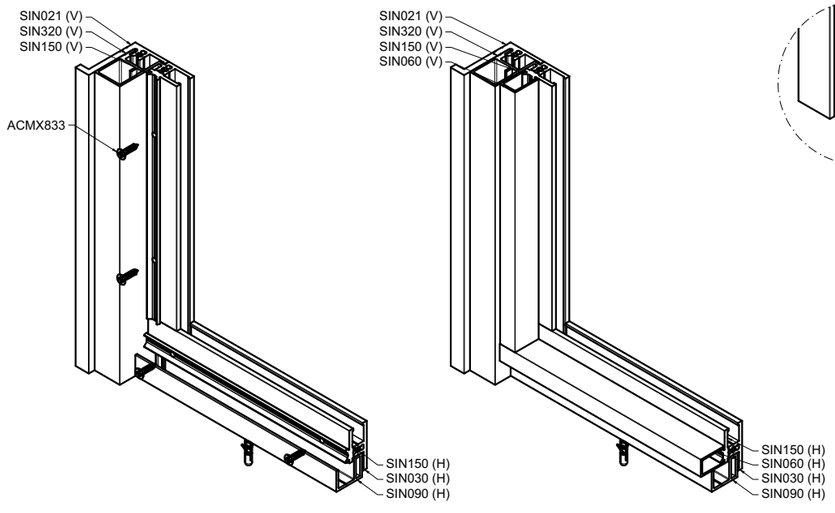


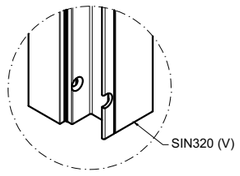


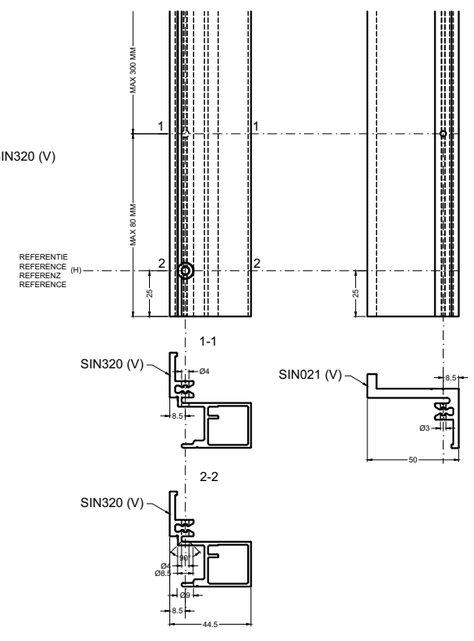


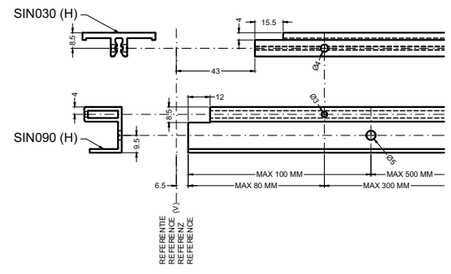


12A-MONTAGE SIN320

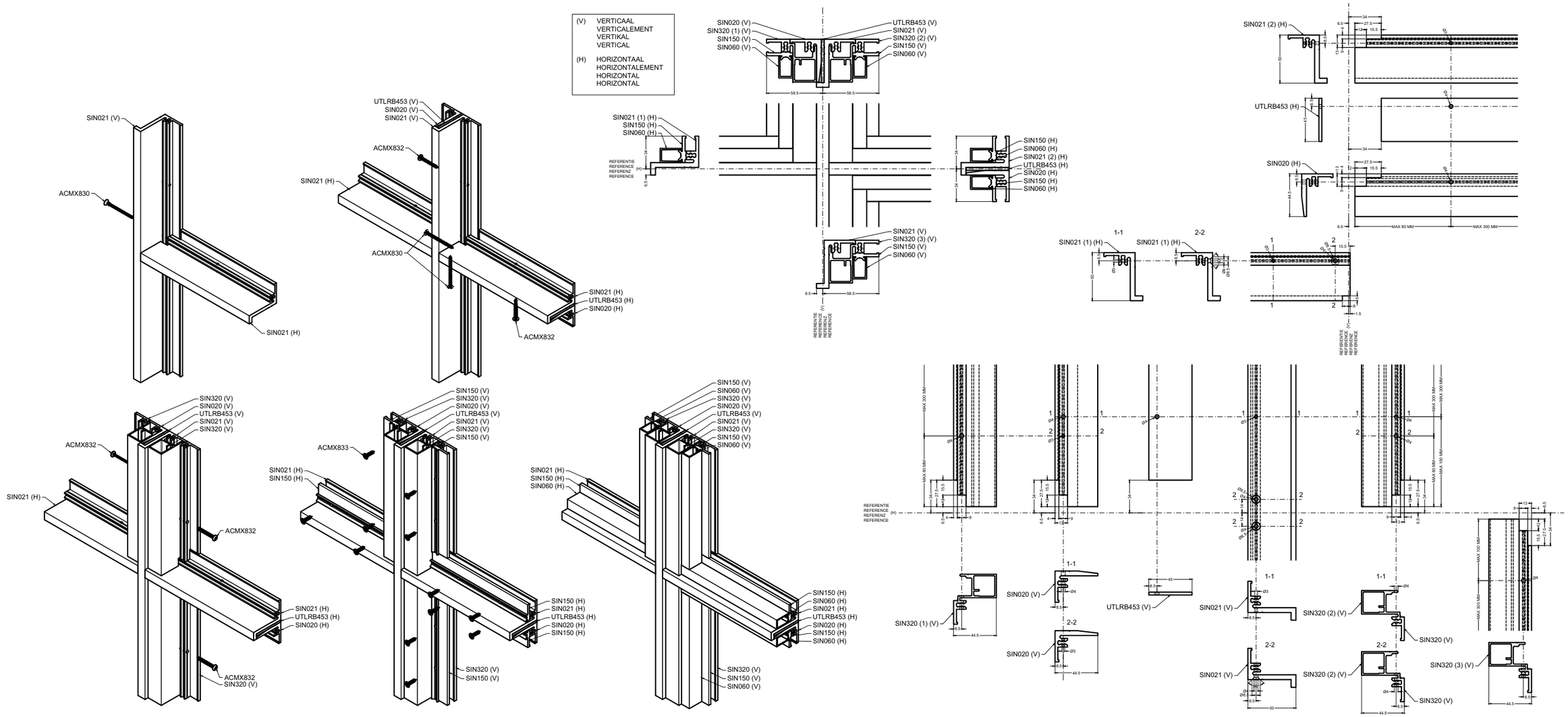


13A-MONTAGE SIN320

aliplast member of CORIALIS

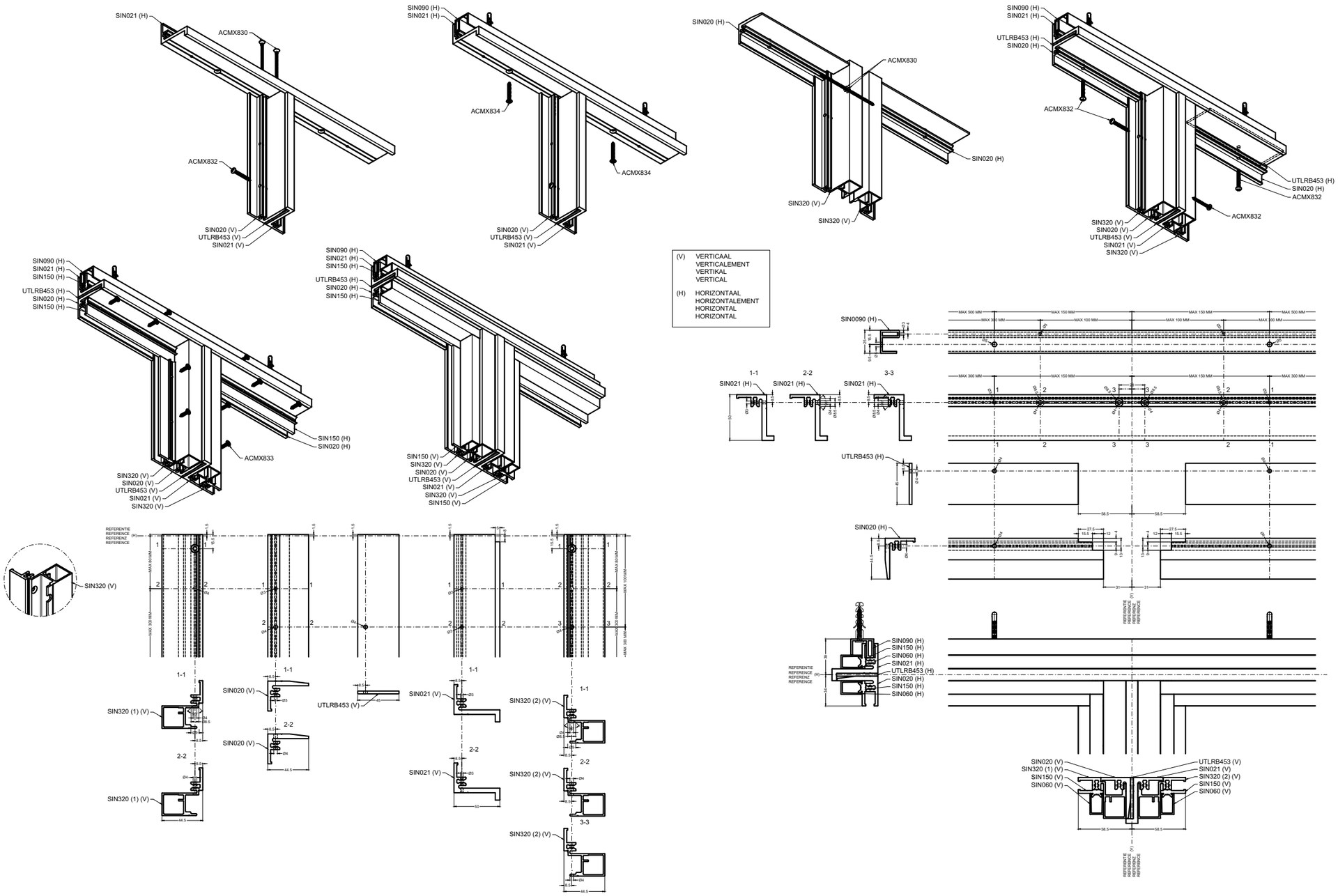


14A-MONTAGE SIN320

BUITENKADER SIN092 - TUSSENREGEL SIN094
DORMANT SIN092 - TRAVERS SIN094
RAHMENPROFIL SIN092 - SPROSSENPROFIL SIN094
OUTER FRAME SIN092 - TRAMSON SIN094

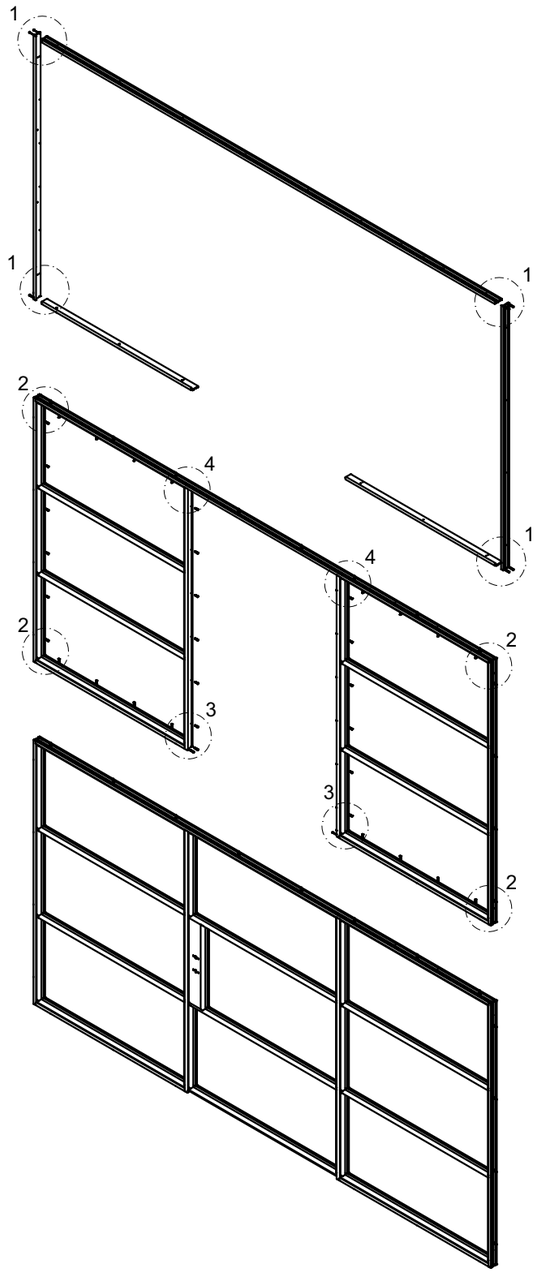


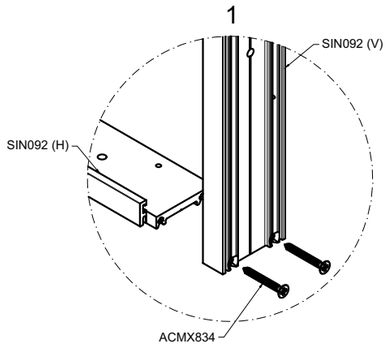


(V) VERTICAAL
VERTICALEMENT
VERTIKAL
VERTICAL

(H) HORIZONTAAL
HORIZONTALEMENT
HORIZONTAL
HORIZONTAL

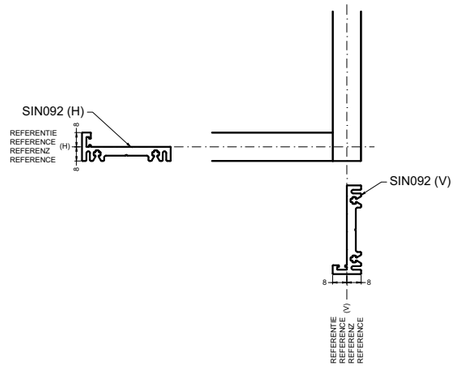


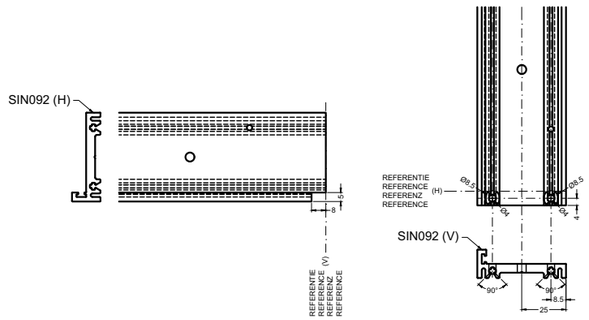


MONTAGE_SIN092_SIN094_1

aliplast
member of
CORIALIS

BUITENKADER SIN092 - TUSSENREGEL SIN094
DORMANT SIN092 - TRAVERS SIN094
RAHMENPROFIL SIN092 - SPROSSENPROFIL SIN094
OUTER FRAME SIN092 - TRAMSON SIN094

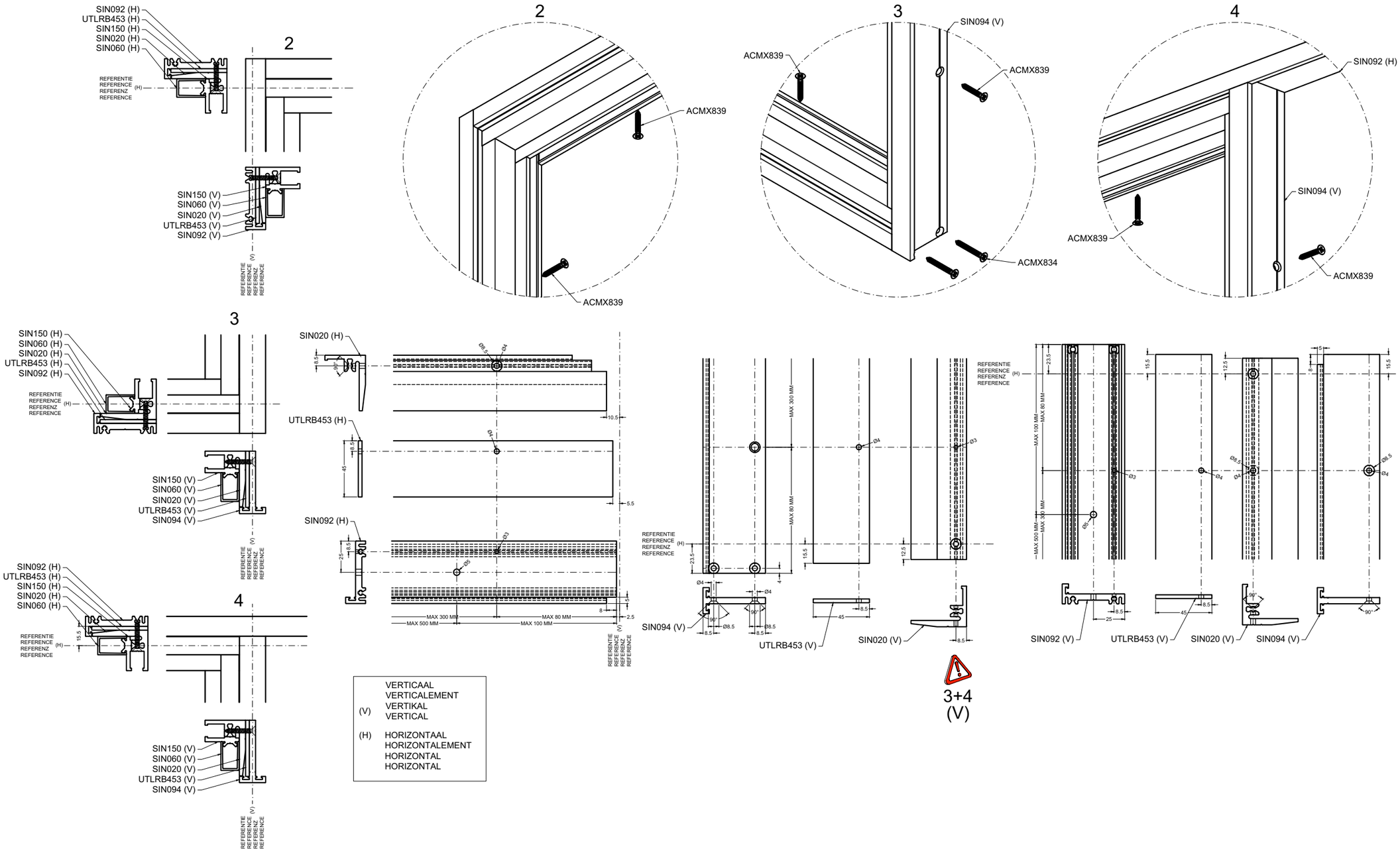


MONTAGE_SIN092_SIN094_2

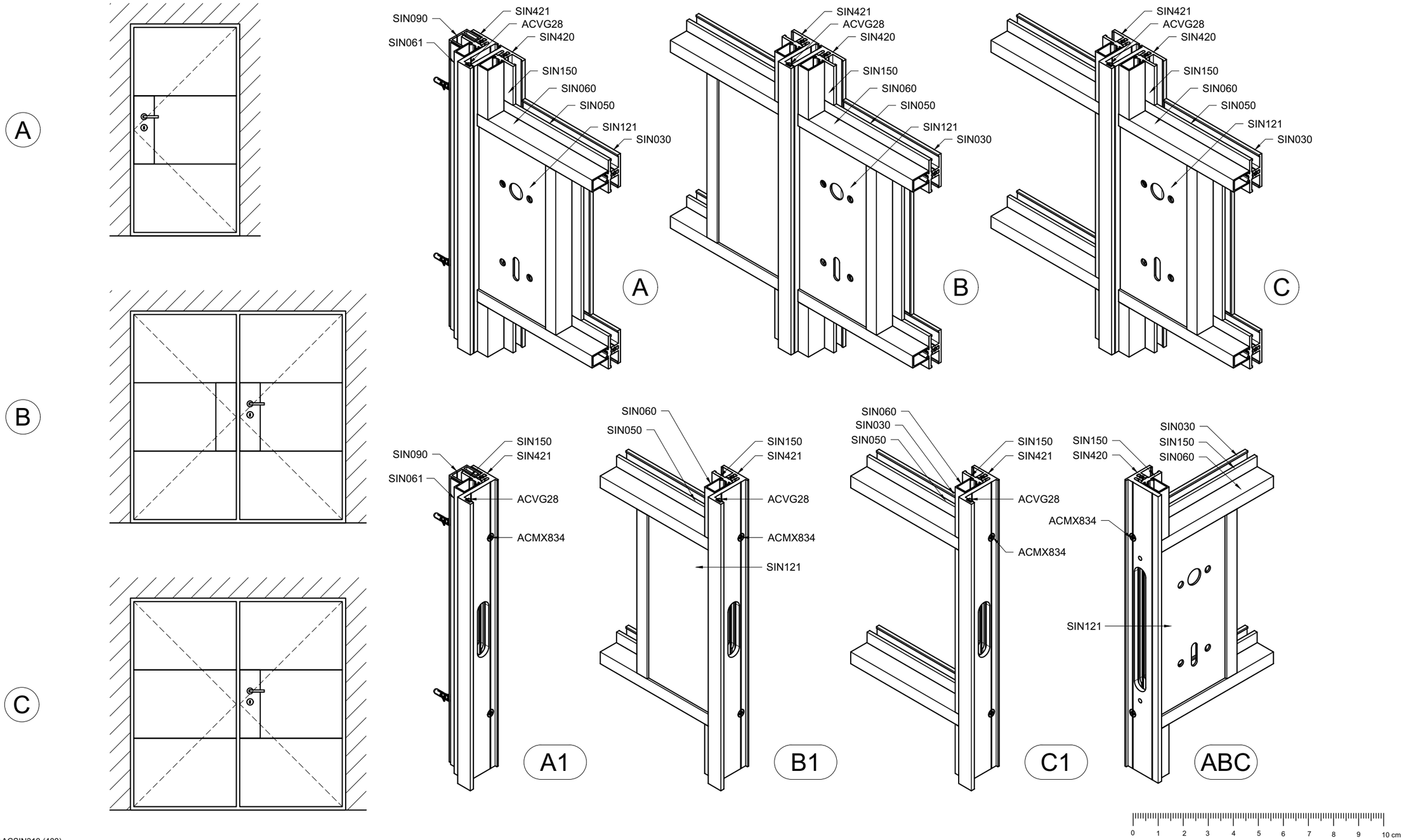


MONTAGE ACSIN300+ACSIN310 (400)

aliplast member of CORIALIS

WERKTEKENINGEN - DESSINS DE CONSTRUCTION - KONSTRUKTIONZEICHNUNGEN - CONSTRUCTION DRAWINGS

A1

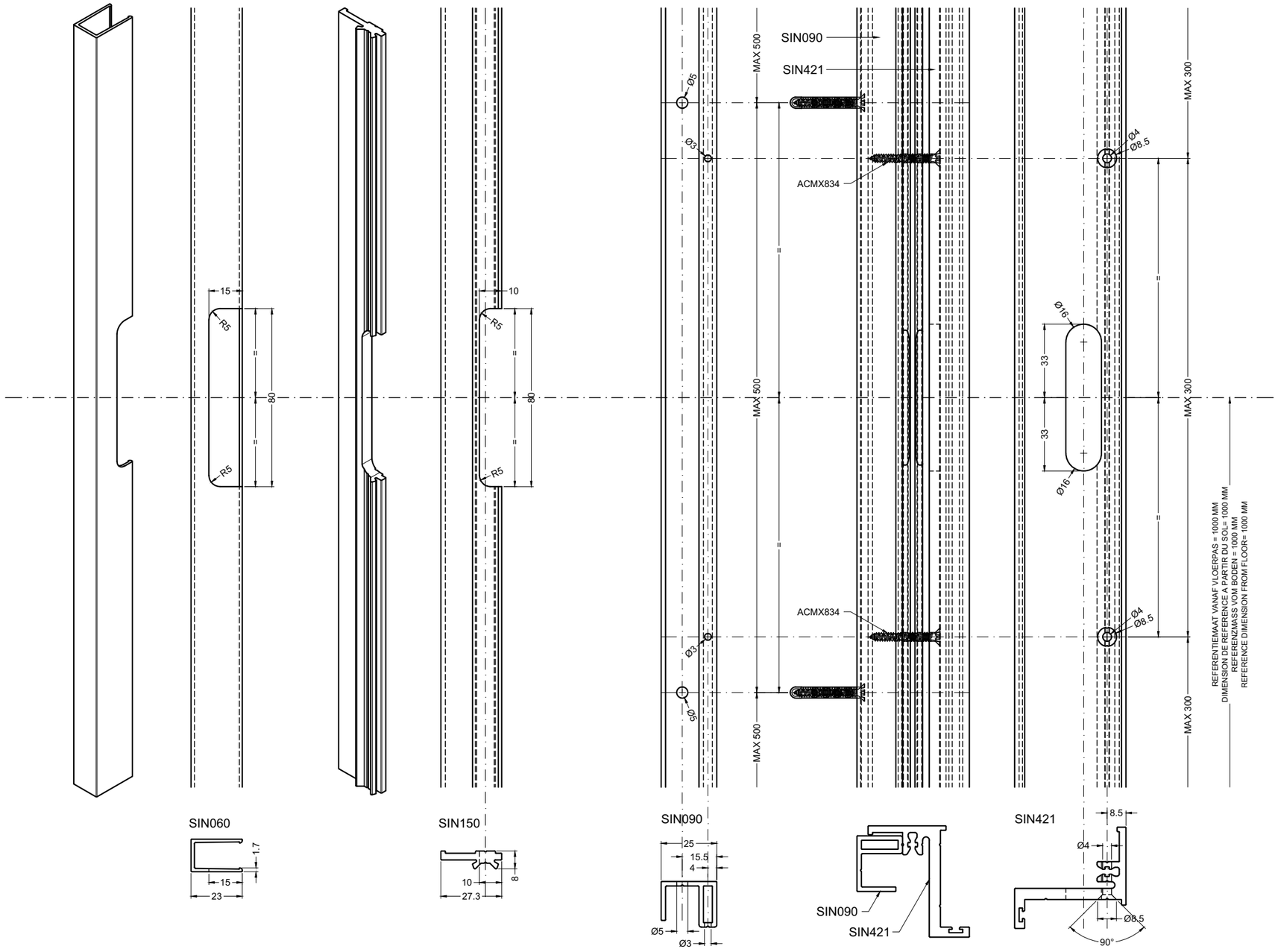


MONTAGE ACSIN310_1 (400)

B1

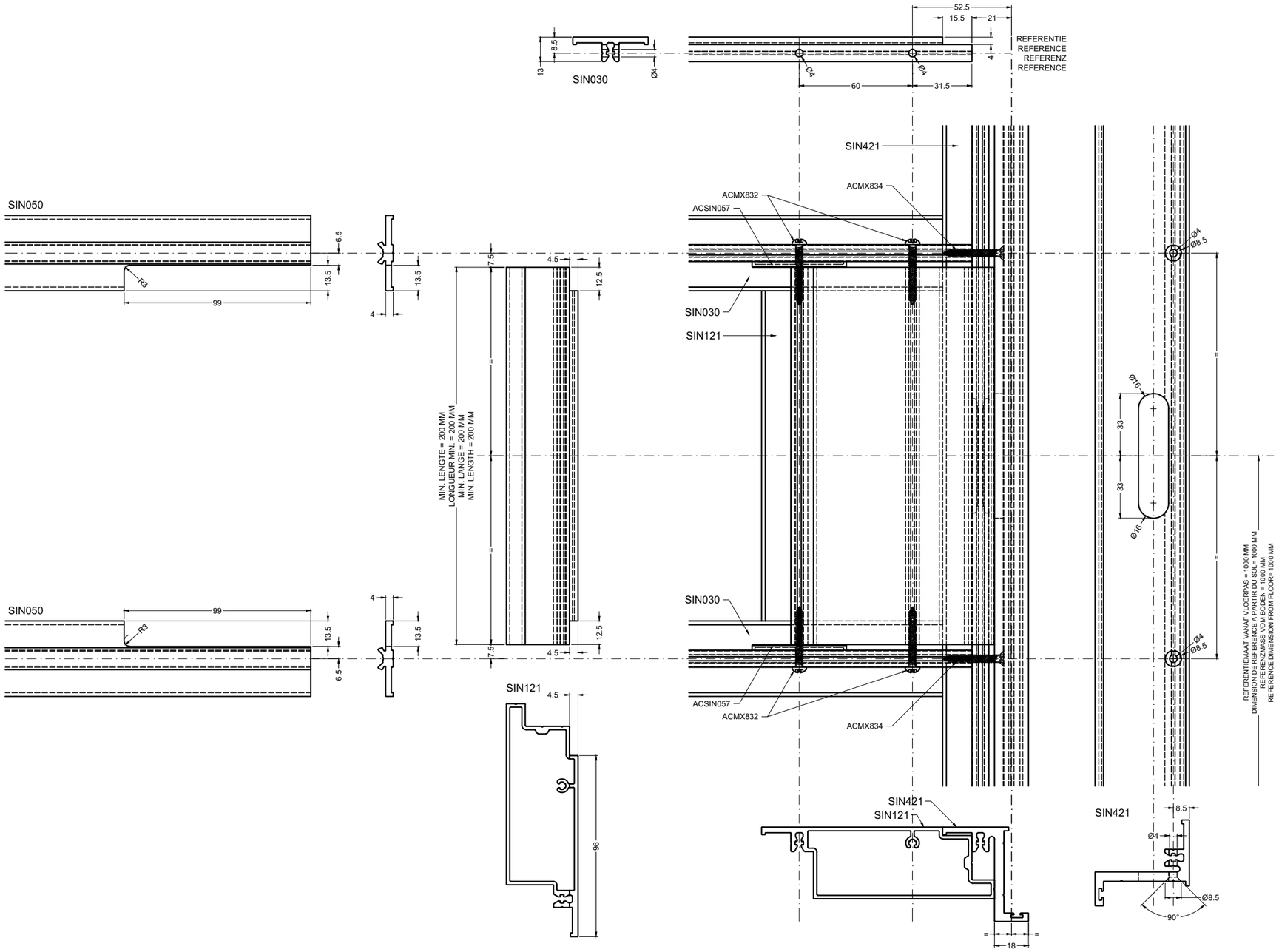


MONTAGE ACSIN310_2 (400)

aliplast member of CORIALIS

C1

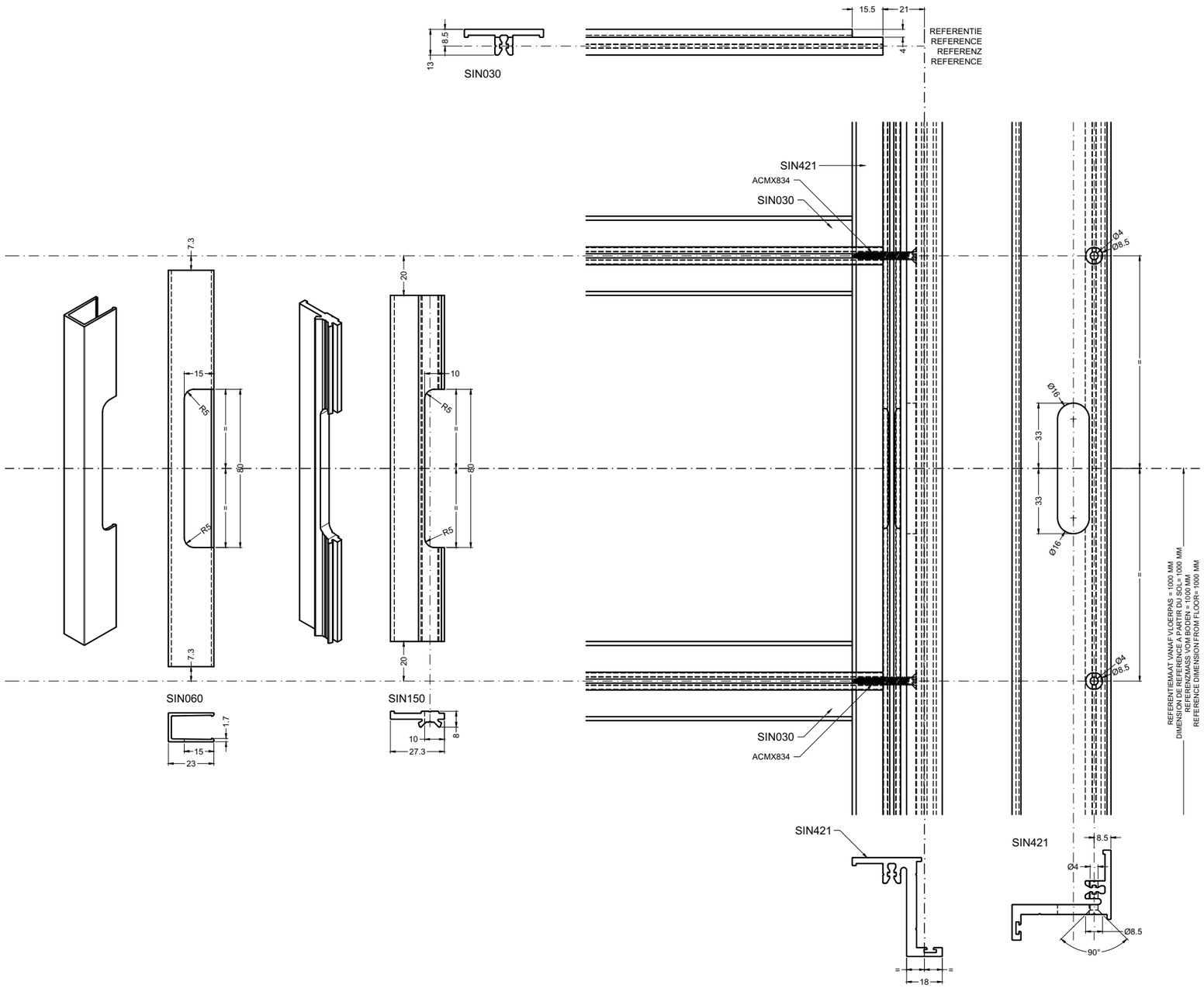


MONTAGE ACSIN310_3 (400)

ABC

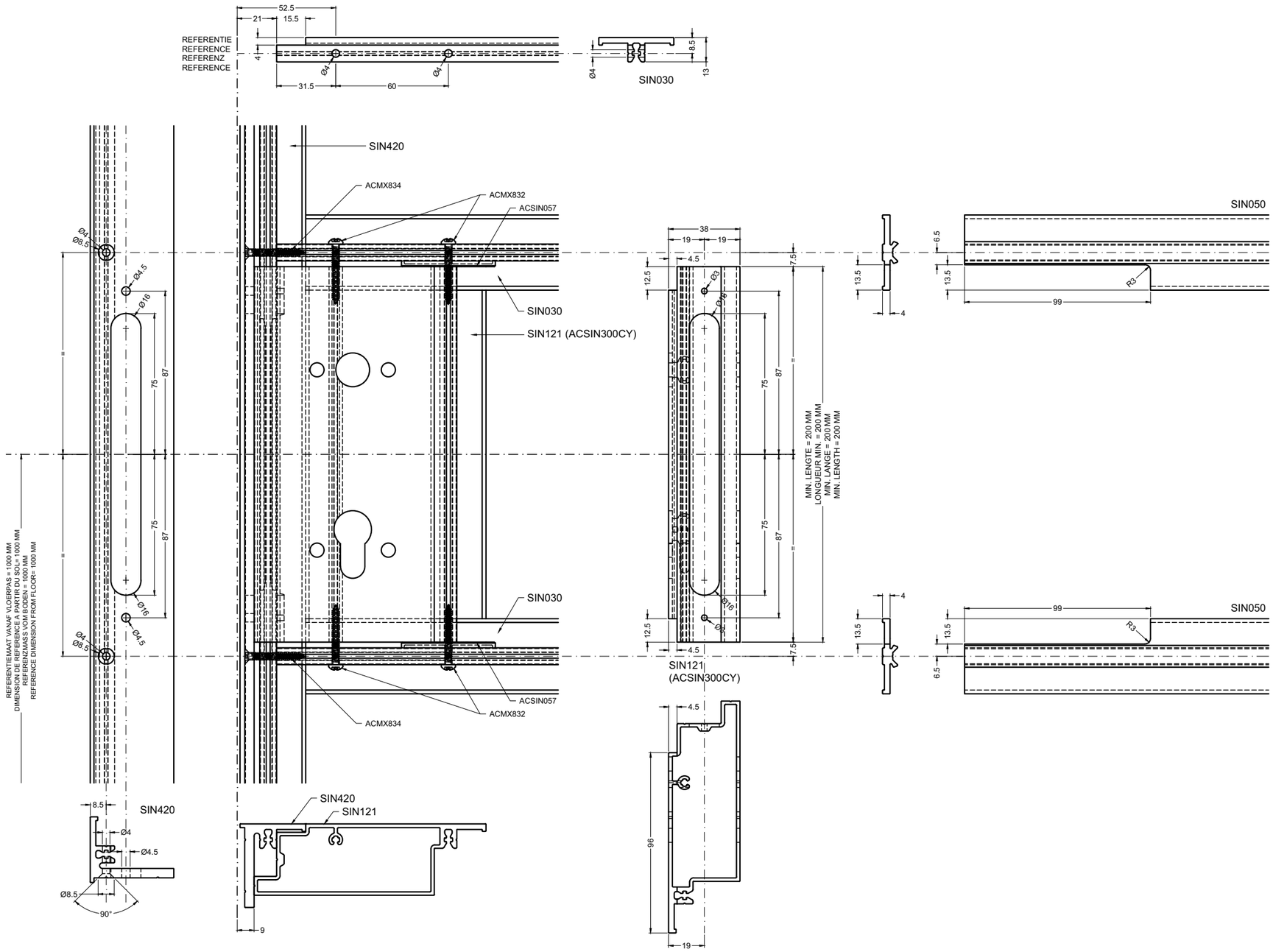


MONTAGE ACSIN300_1 (400)

aliplast
member of
CORIALIS

ABC

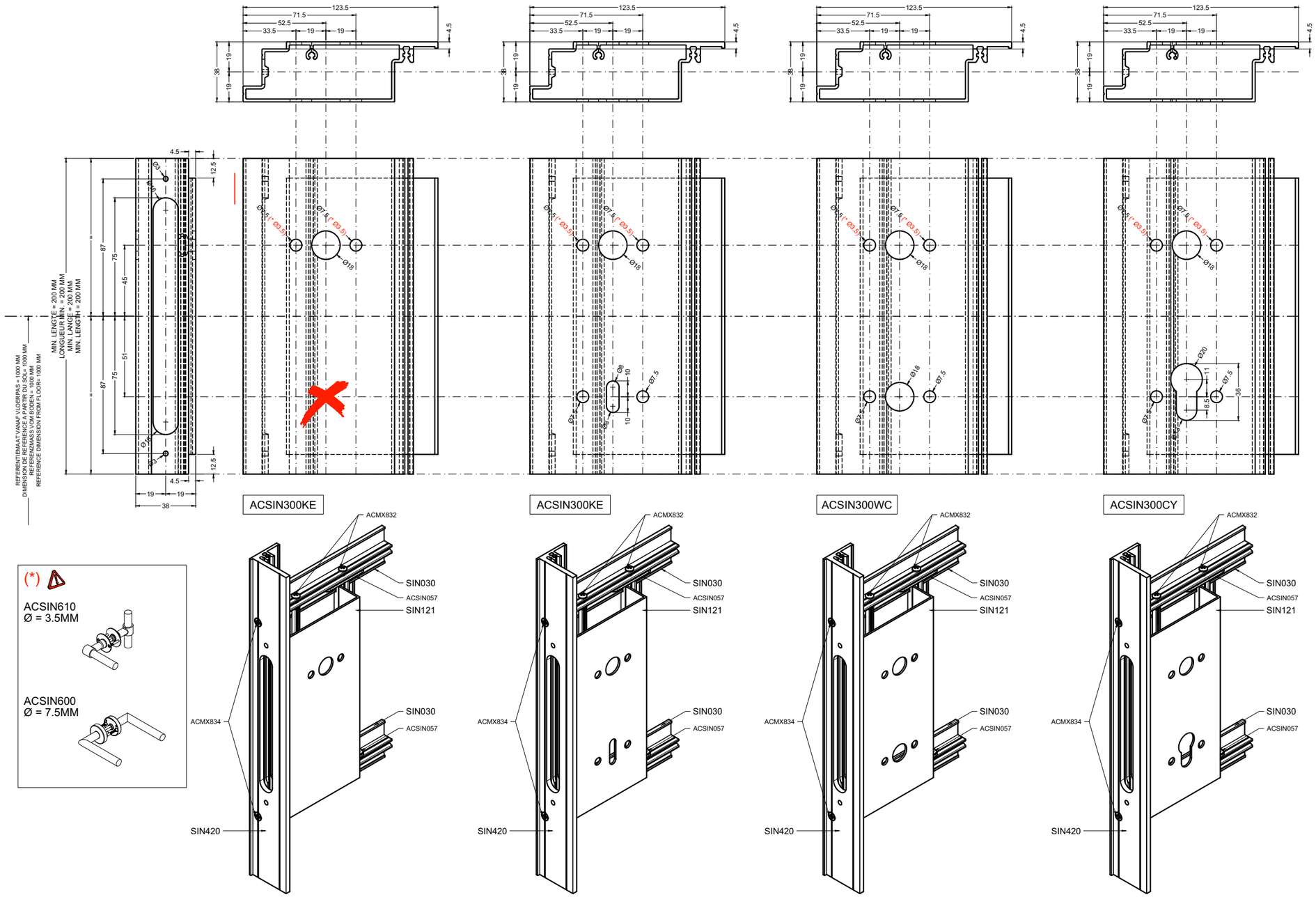


MONTAGE ACSIN300_2 (400)



aliplast
member of
CORIALIS

IDA

A

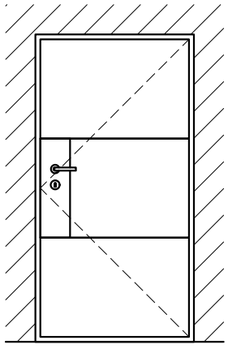

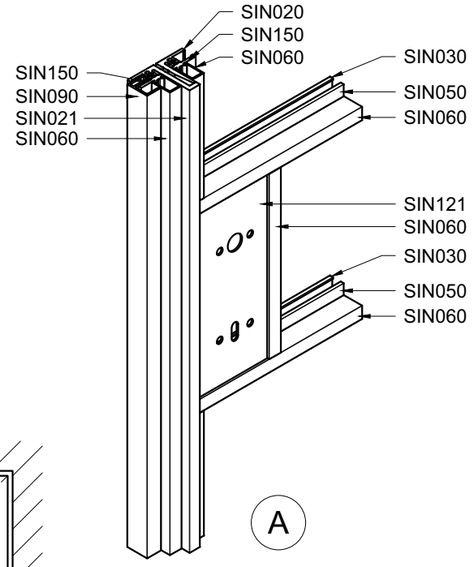


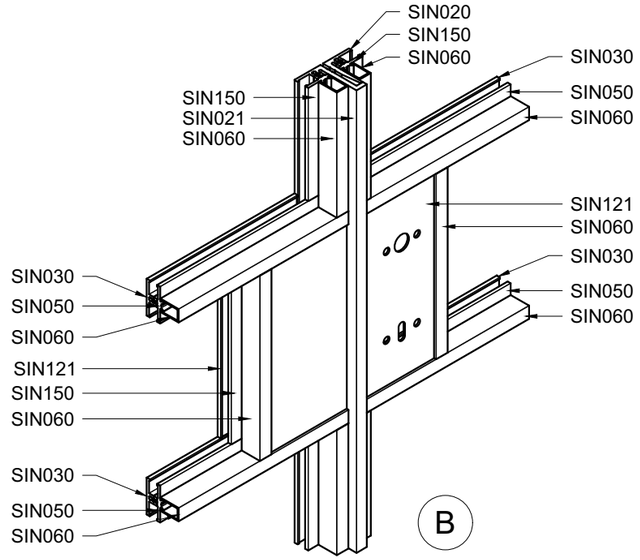


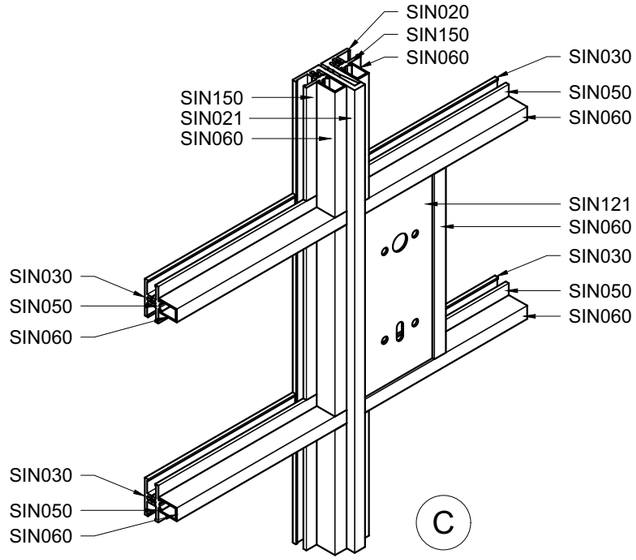


B

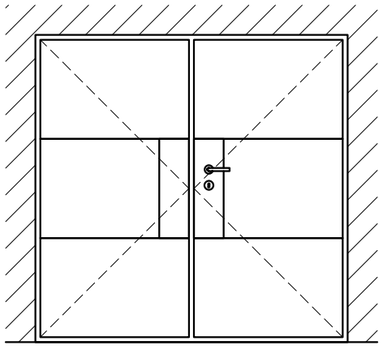

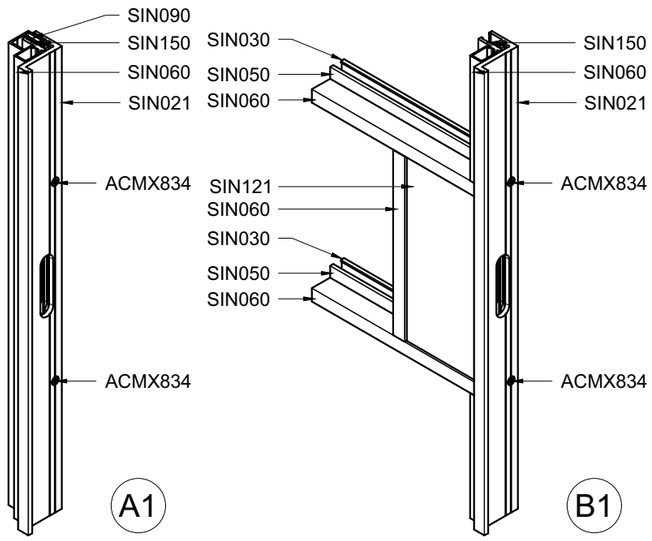


C

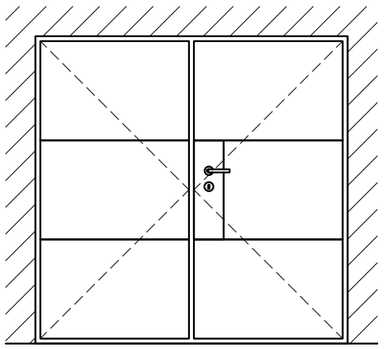

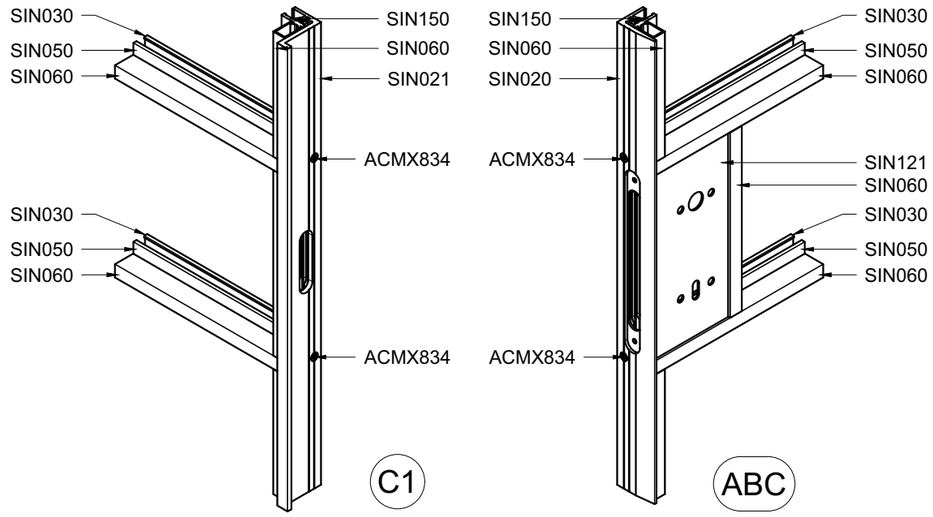

MONTAGE ACSIN300+ACSIN310

aliplast member of CORIALIS

WERKTEKENINGEN - DESSINS DE CONSTRUCTION - KONSTRUKTIONZEICHNUNGEN - CONSTRUCTION DRAWINGS

A1

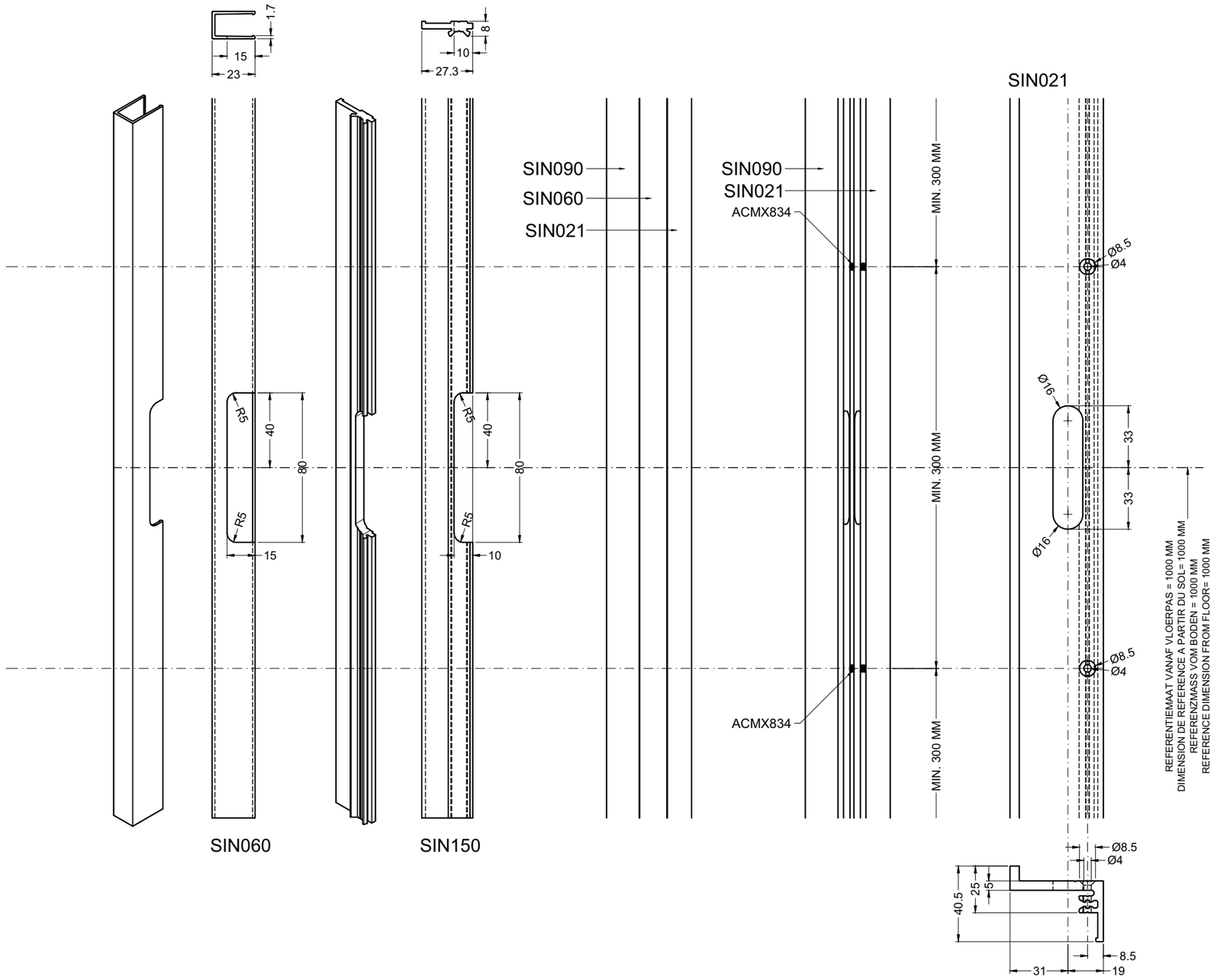


MONTAGE ACSIN310_3

B1

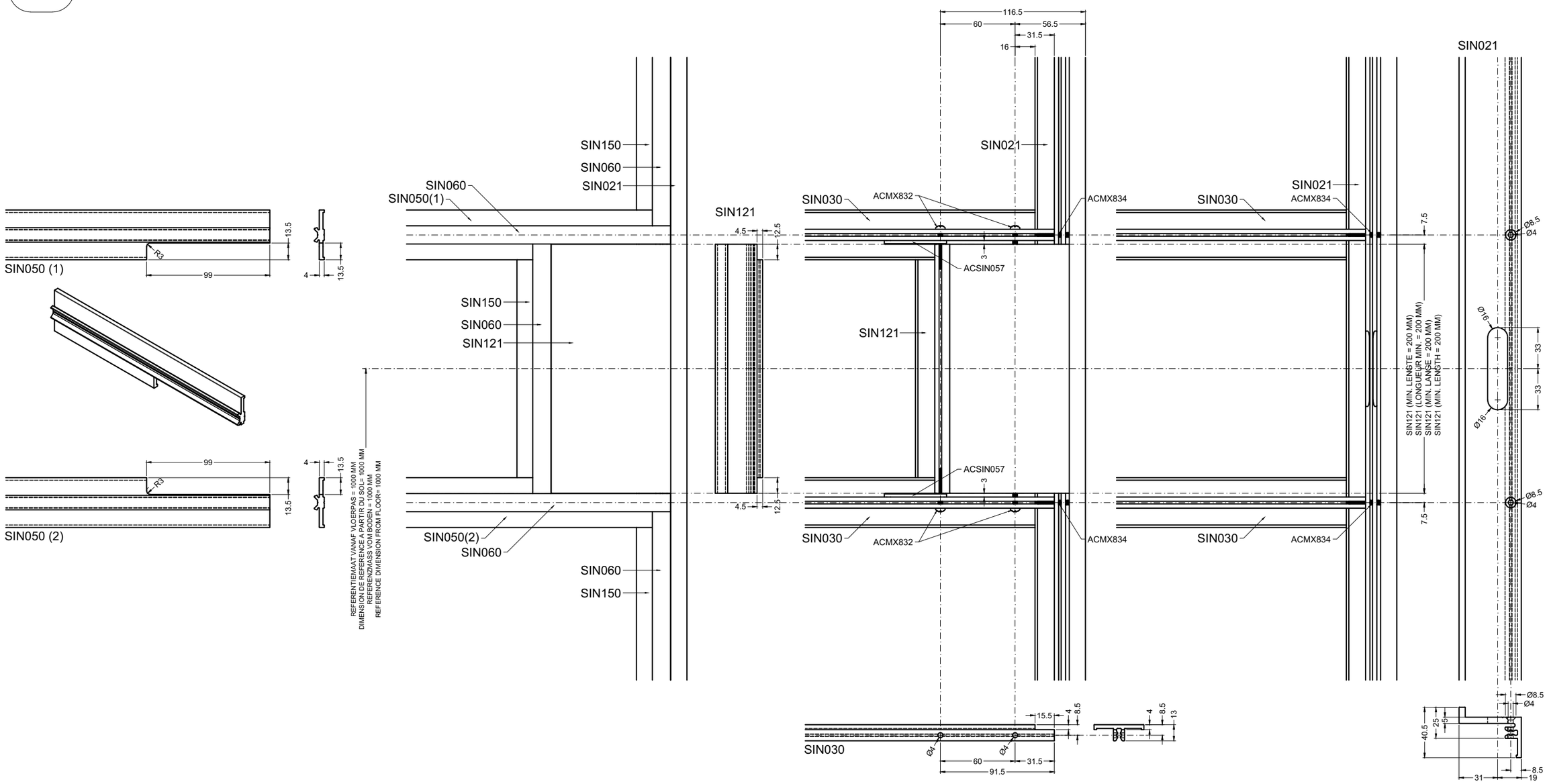


MONTAGE ACSIN310_1

aliplast member of CORIALIS

C1

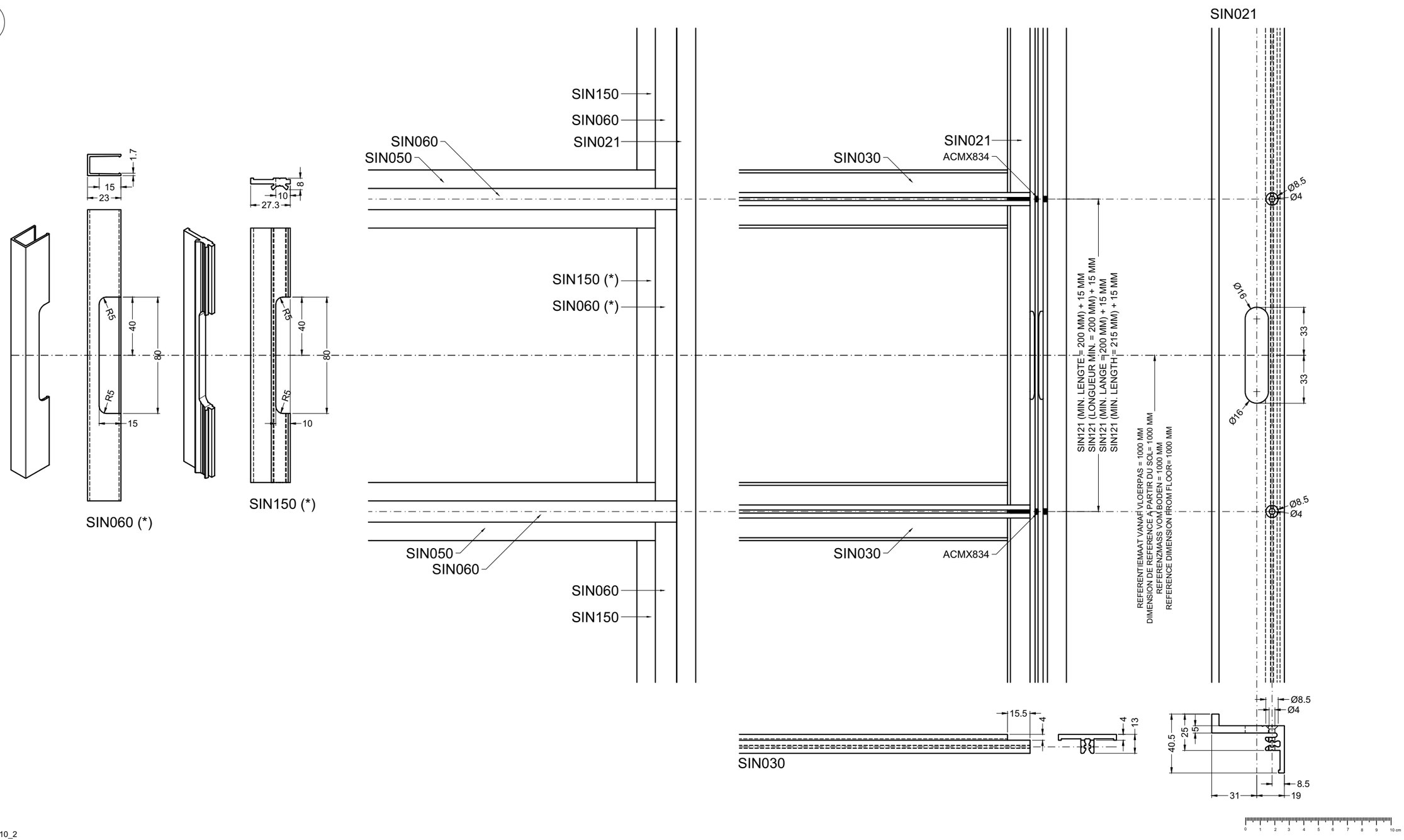


MONTAGE ACSIN310_2



aliplast
member of
CORIALIS

ABC

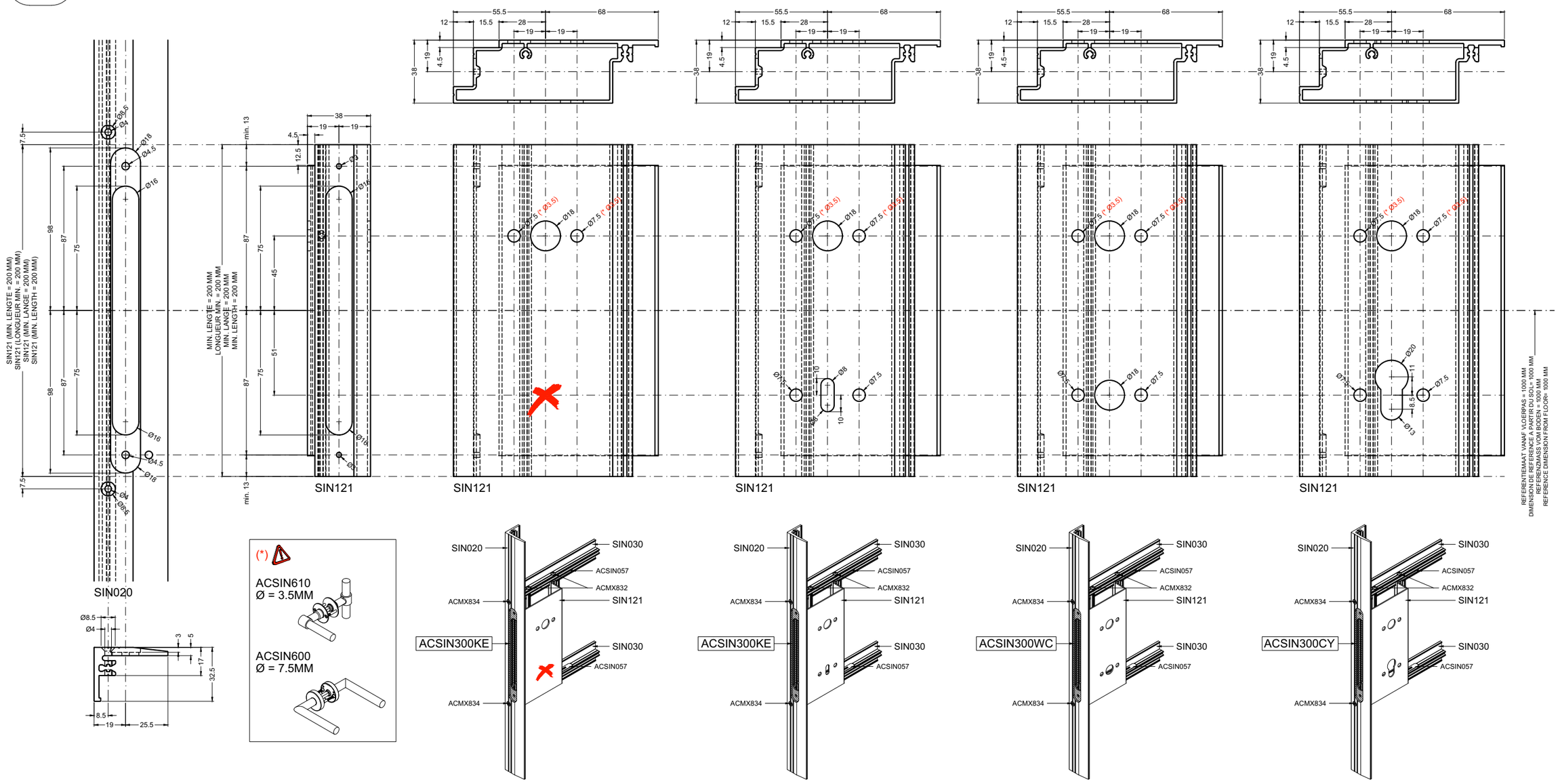


MONTAGE ACSIN300_1

aliplast member of CORIALIS

WERKTEKENINGEN - DESSINS DE CONSTRUCTION - KONSTRUKTIONZEICHNUNGEN - CONSTRUCTION DRAWINGS

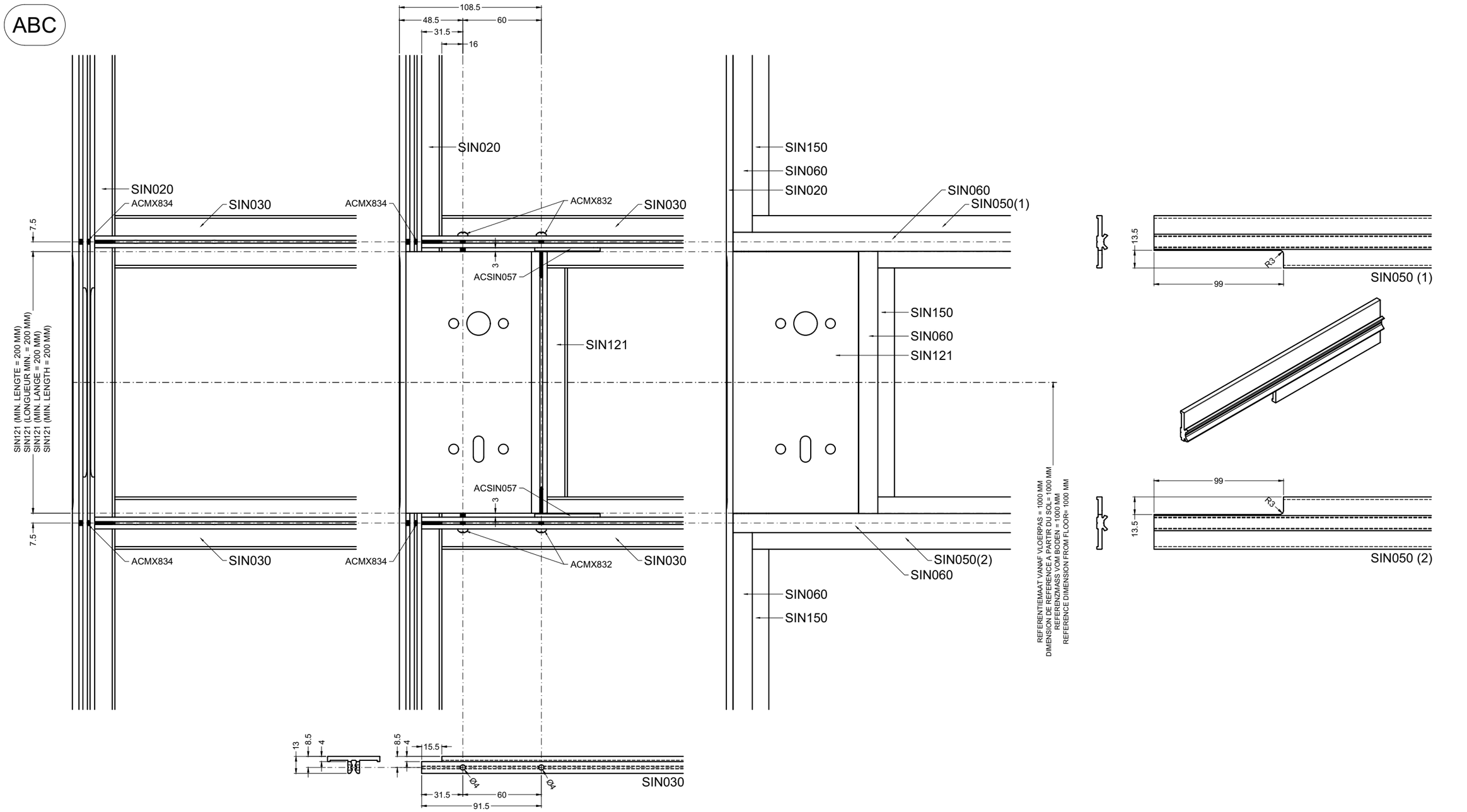


MONTAGE ACSIN300_2



aliplast member of CORIALIS

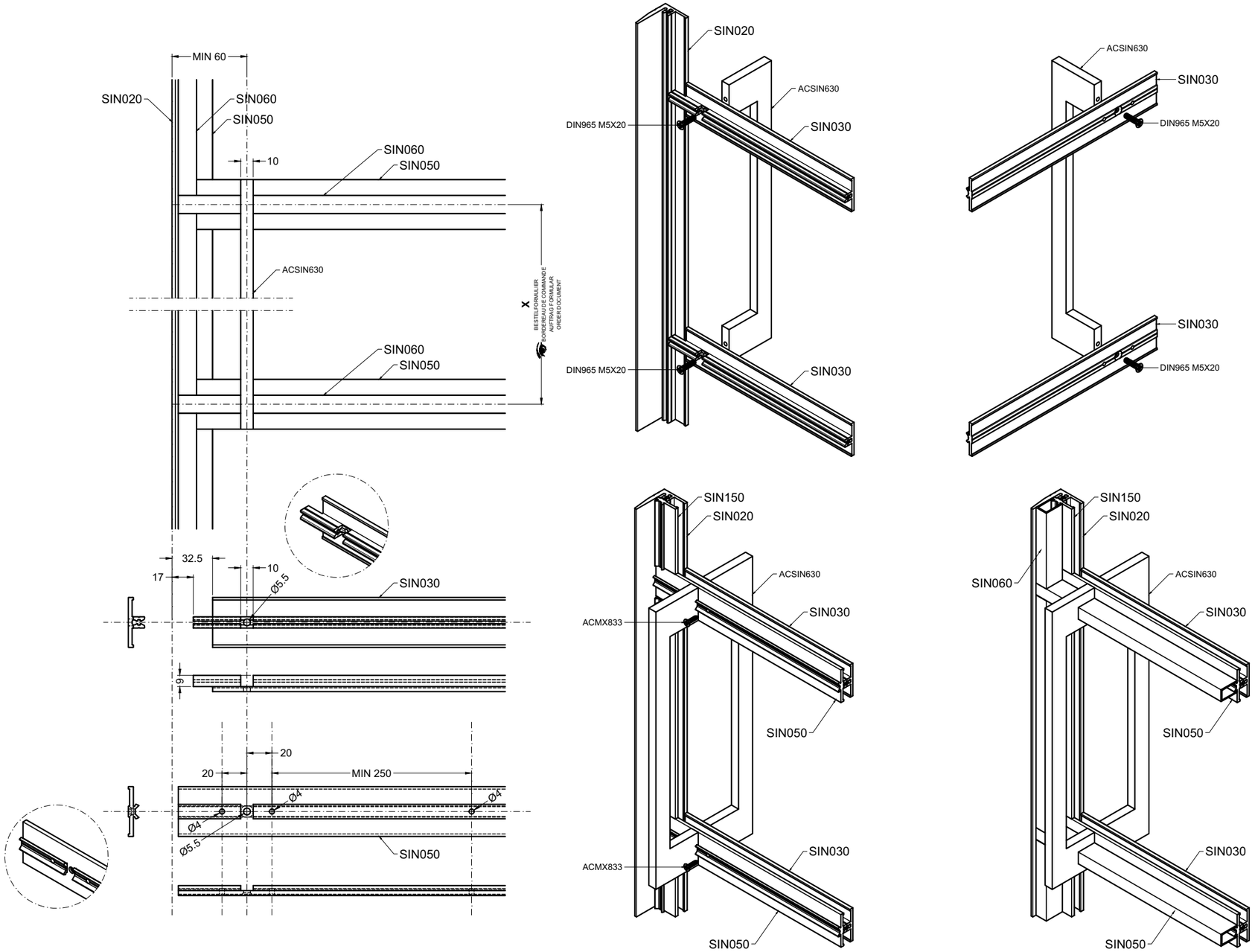


MONTAGE ACSIN6XX_1

aliplast member of CORIALIS

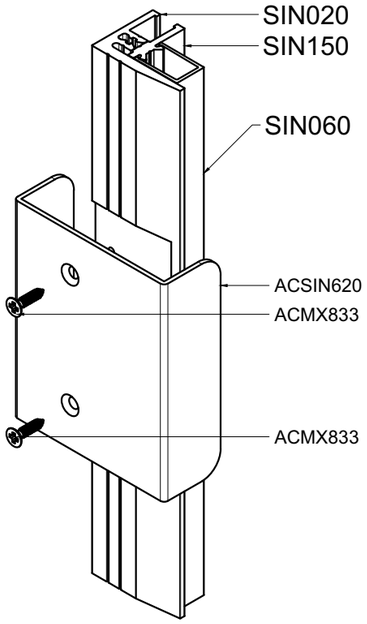


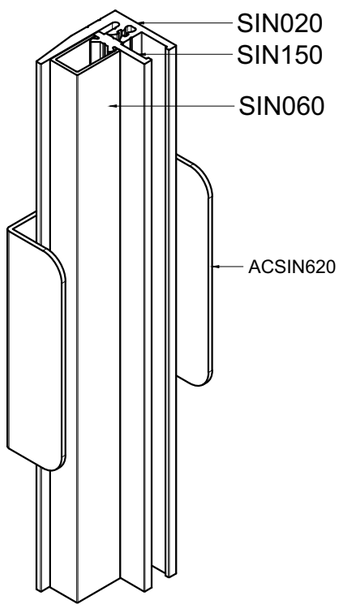


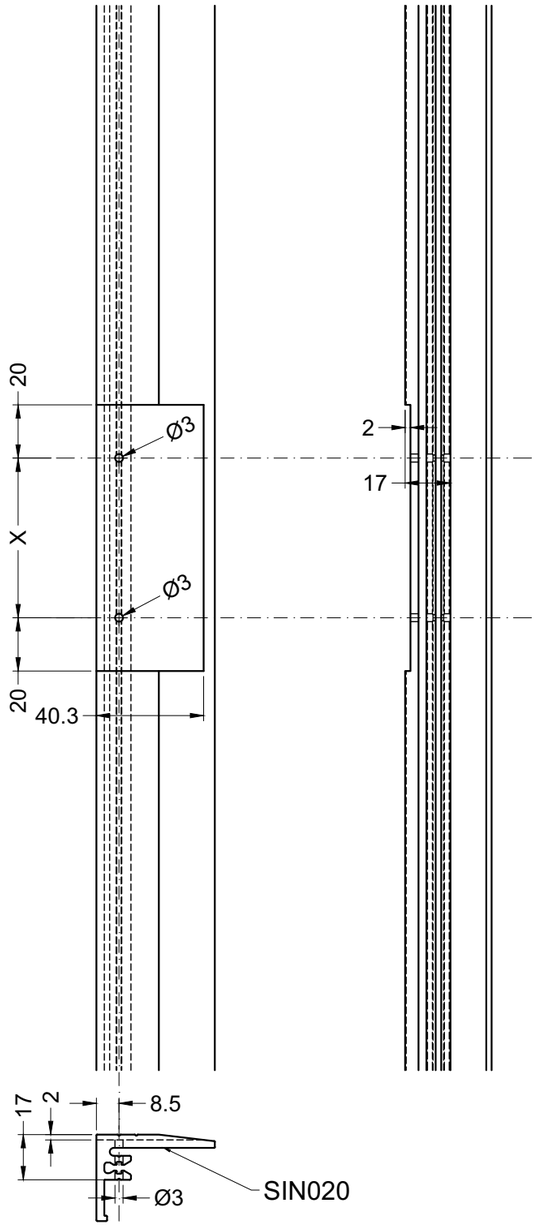


| ACSIN620 NR. | X (MM) |
|---|---|
| ACSIN620-100 | 100 |
| ACSIN620-200 | 200 |
| ACSIN620-300 | 300 |

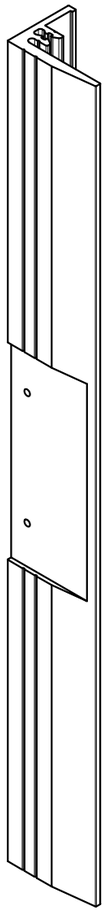

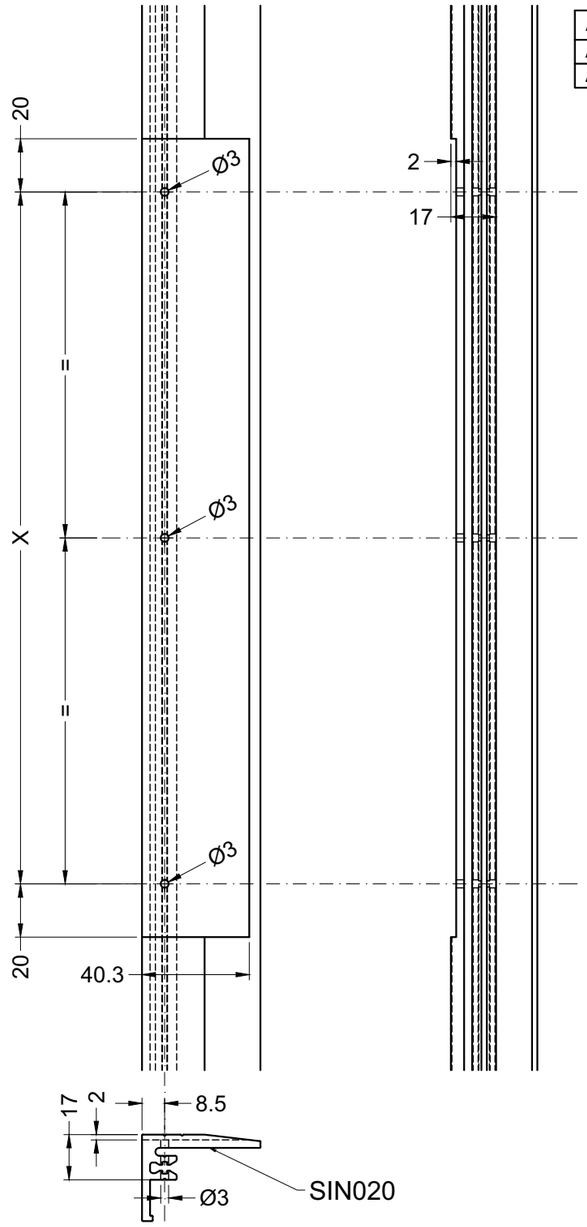


| ACSIN620 NR. | X (MM) |
|---|---|
| ACSIN620-400 | 400 |
| ACSIN620-500 | 500 |

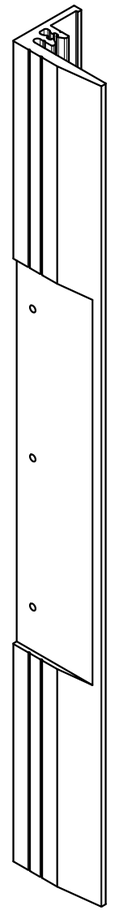

MONTAGE ACSIN6XX_2

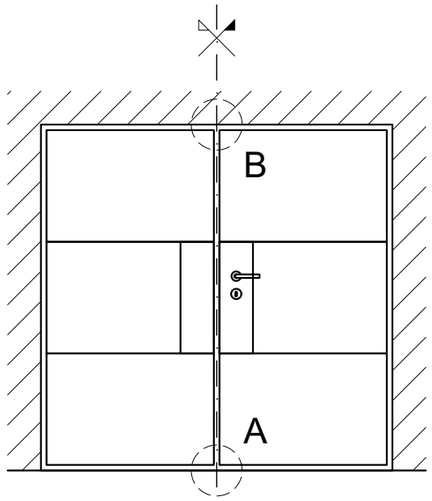


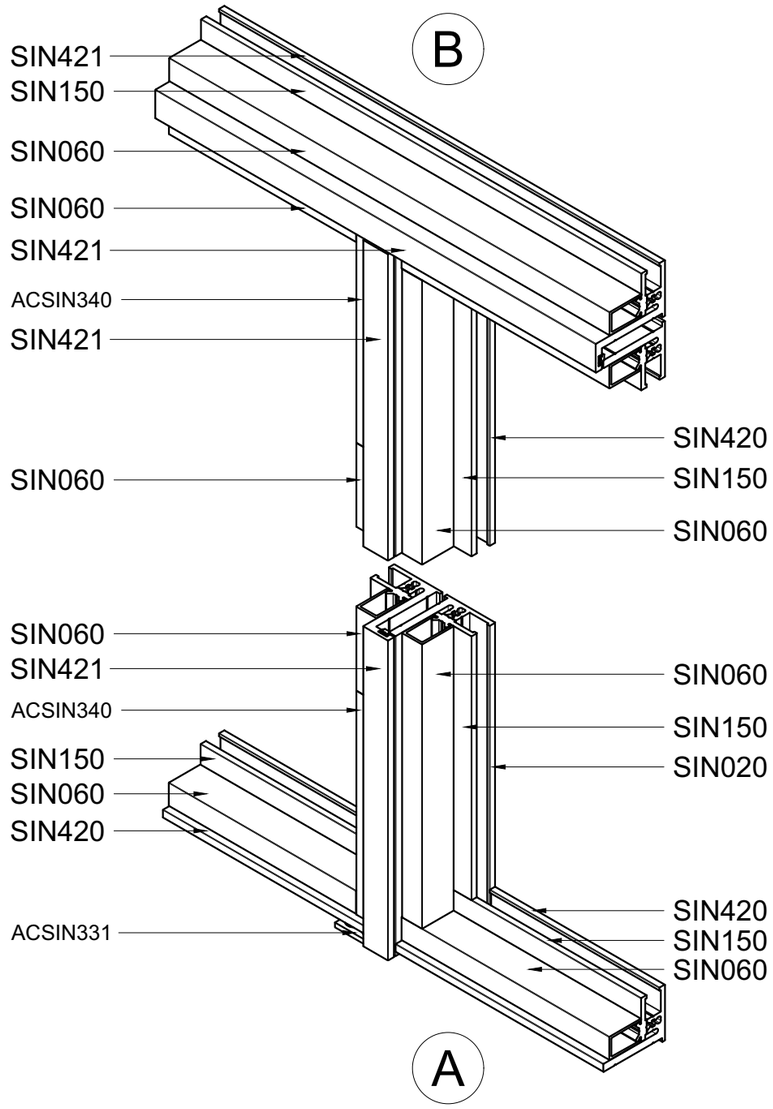


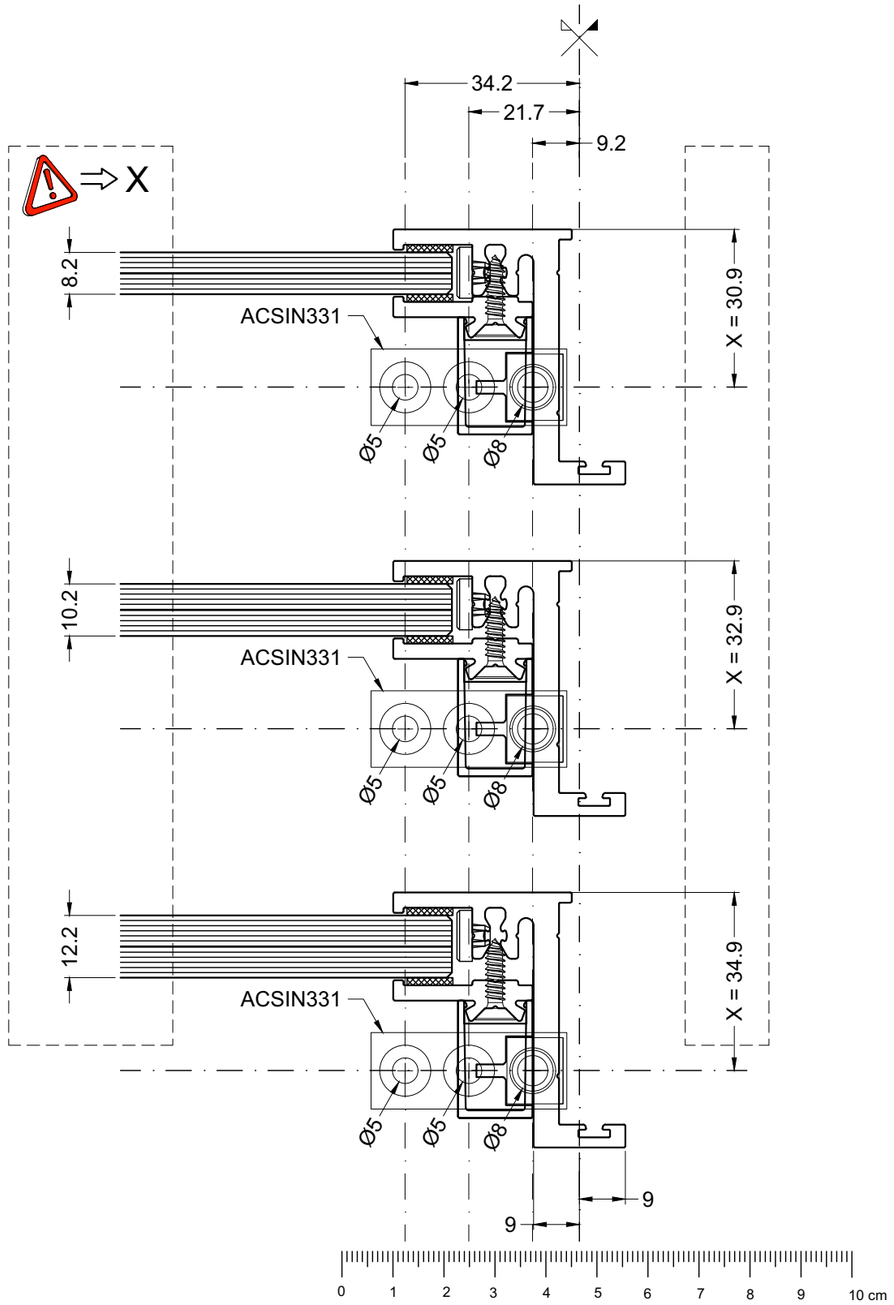


WERKTEKENINGEN - DESSINS DE CONSTRUCTION - KONSTRUKTIONZEICHNUNGEN - CONSTRUCTION DRAWINGS

MONTAGE ACSIN340_1 (400)

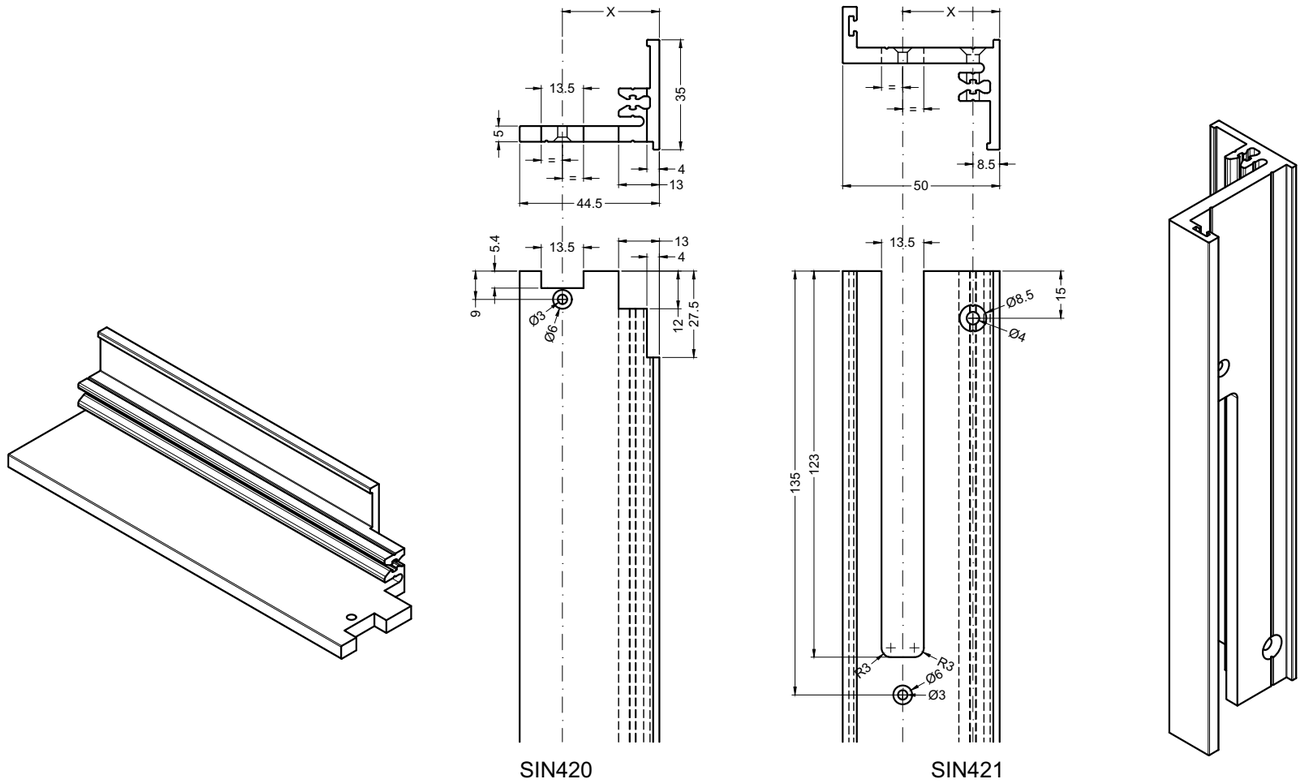


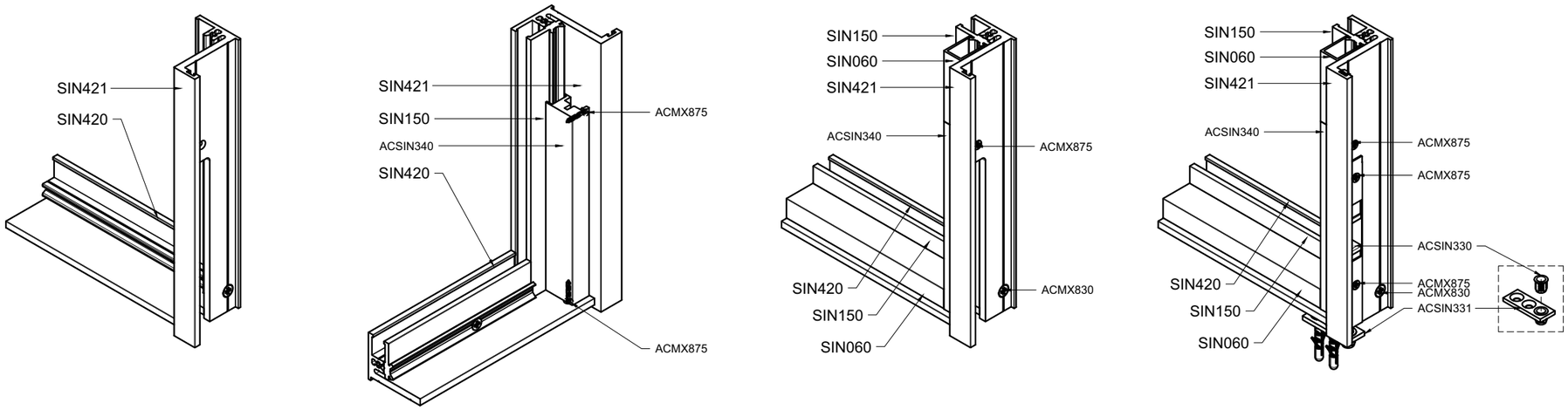

MONTAGE ACSIN340_2 (400)



aliplast
member of
CORIALIS

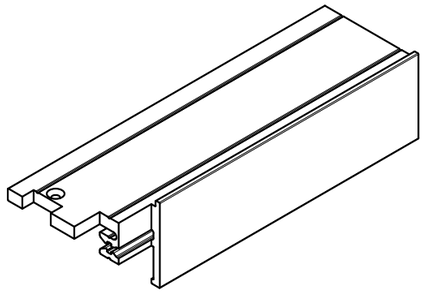

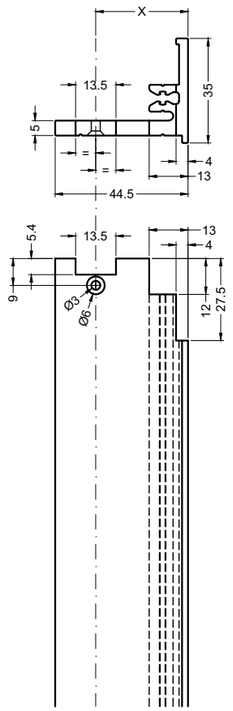


SIN420

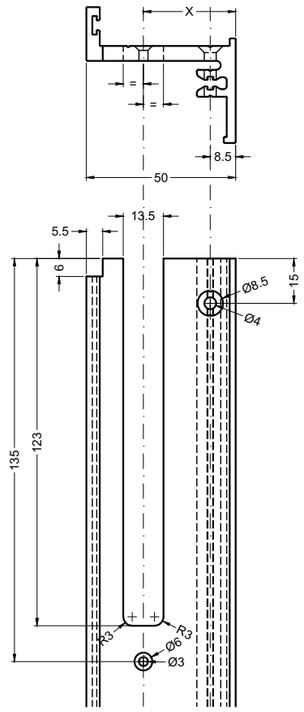


SIN421

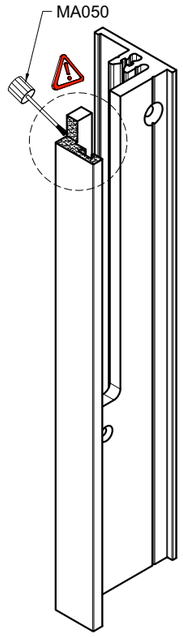


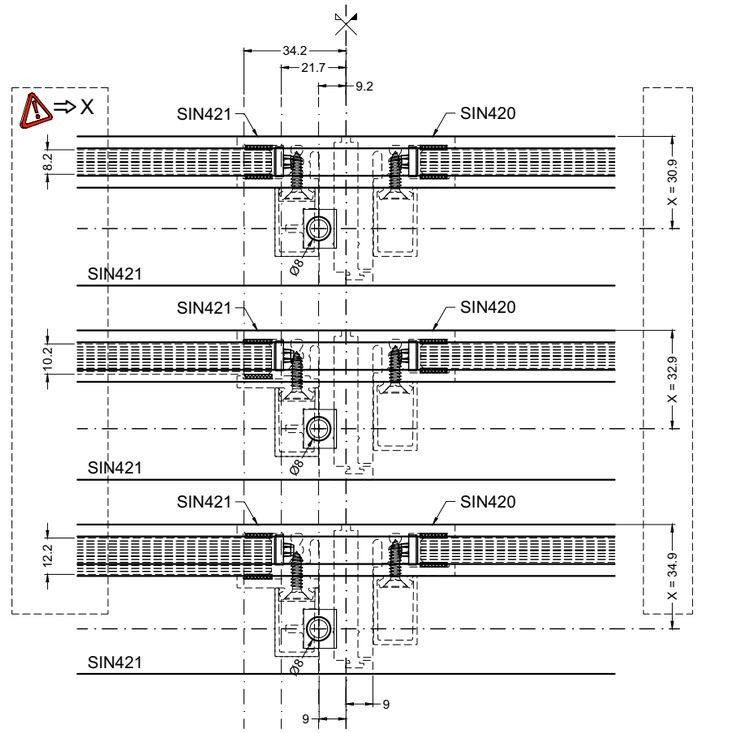


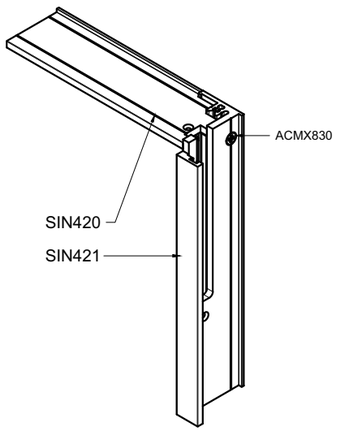


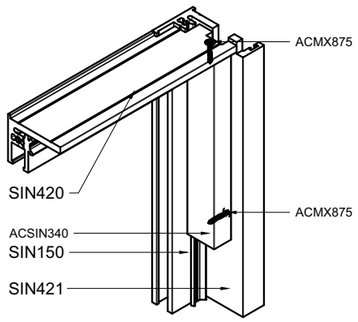


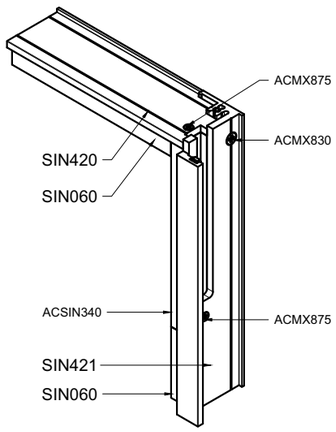


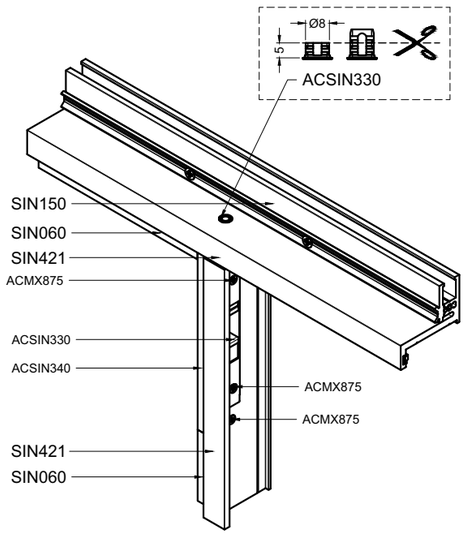


MONTAGE ACSIN340_3 (400)

aliplast member of CORIALIS

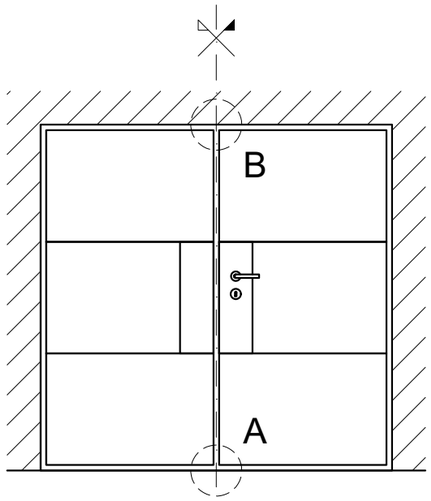


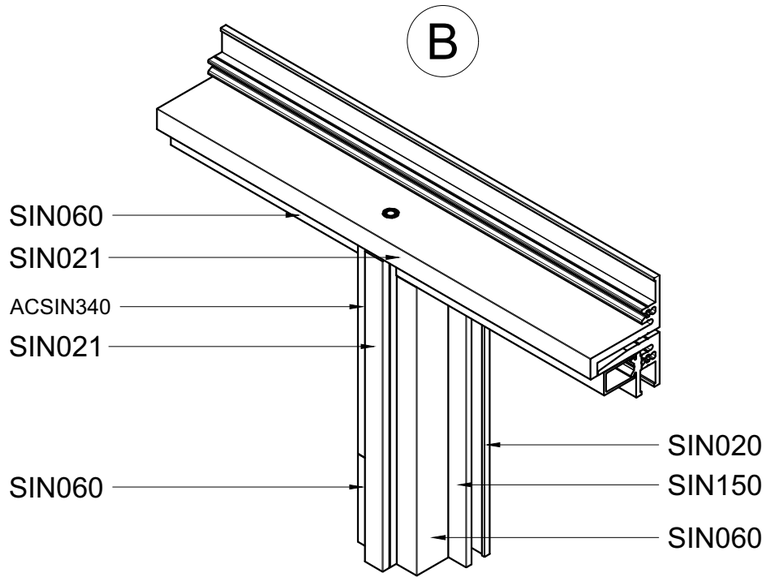


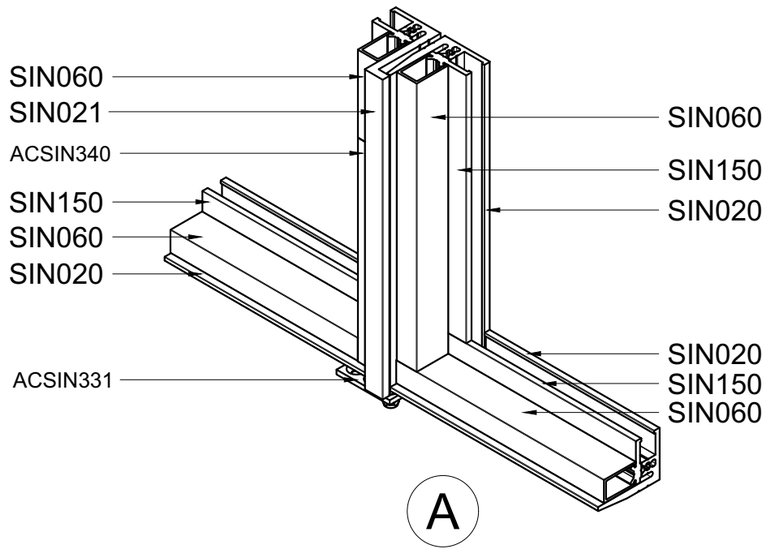


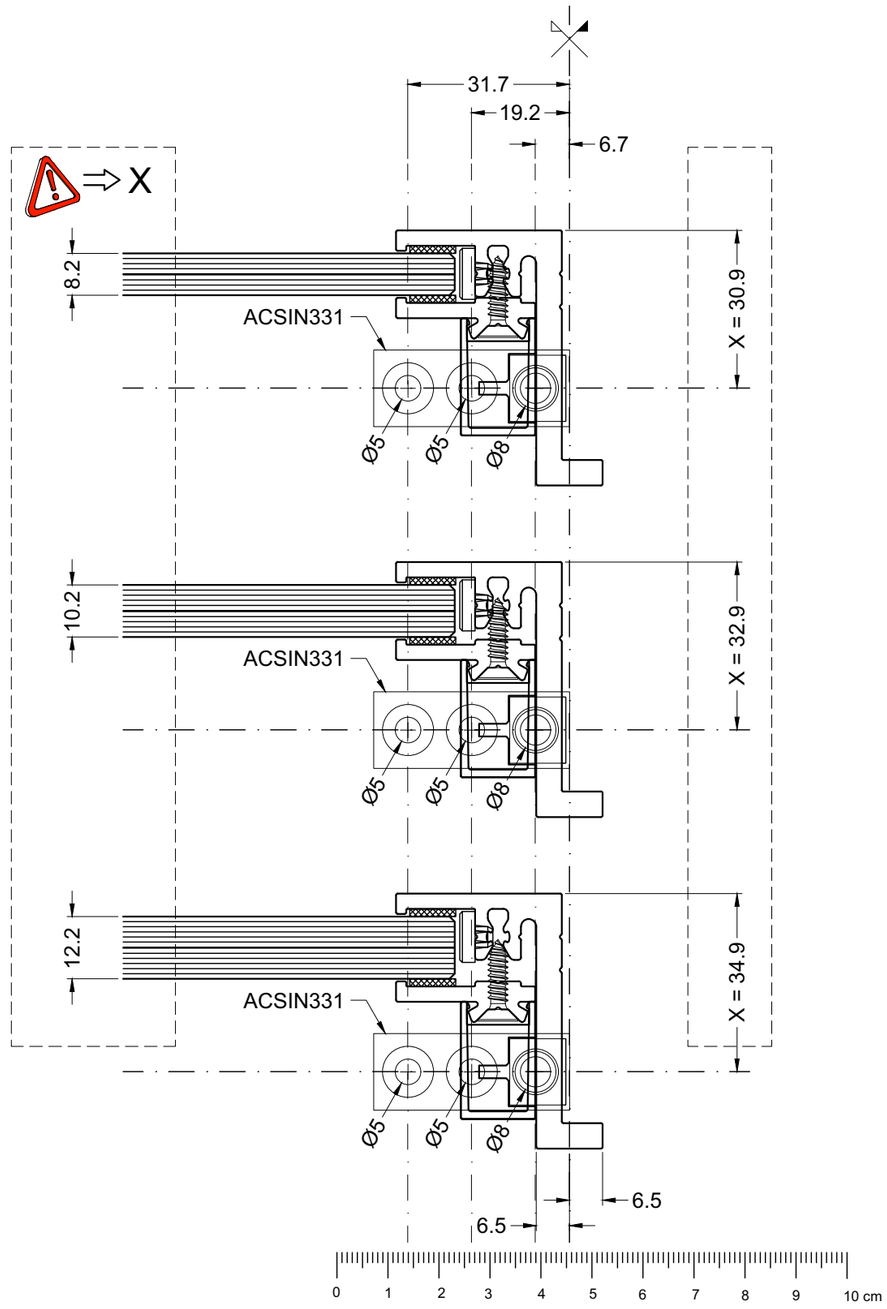


MONTAGE ACSIN340_1

A

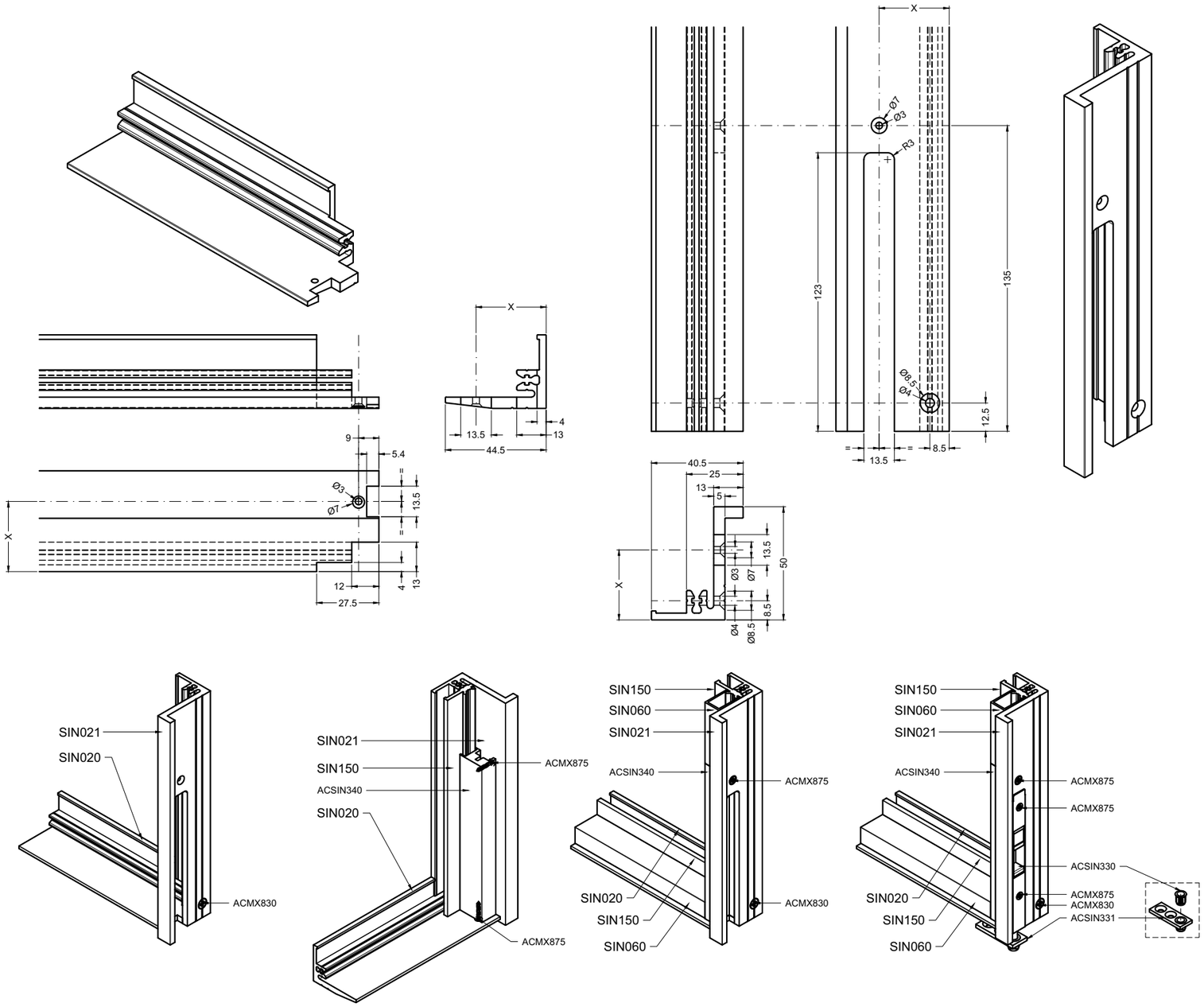


MONTAGE ACSIN340_2

aliplast member of CORIALIS

B

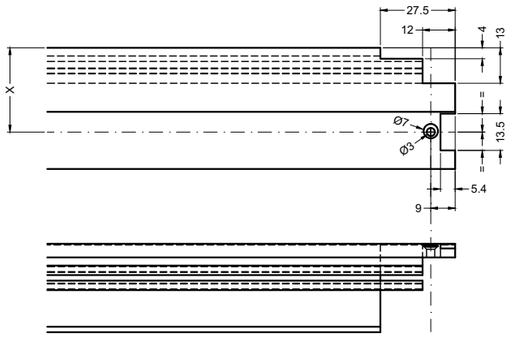


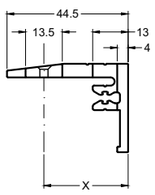


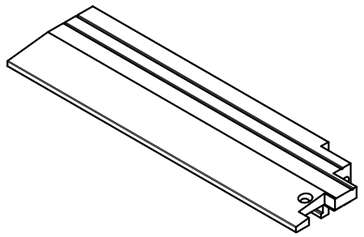

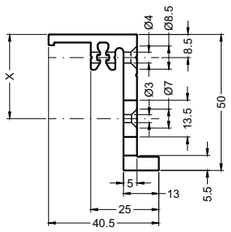


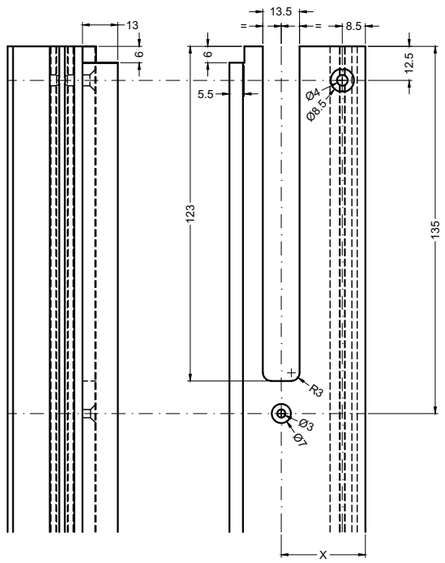


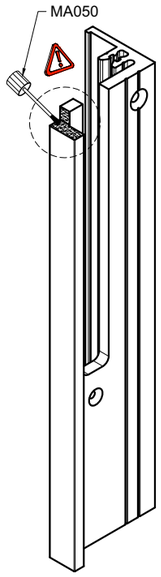


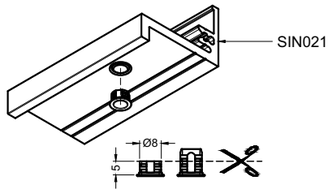


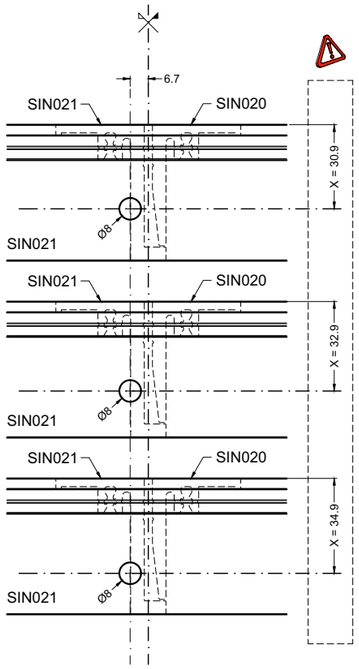


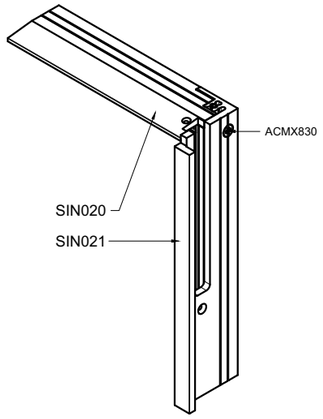


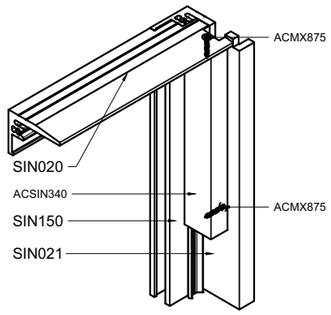


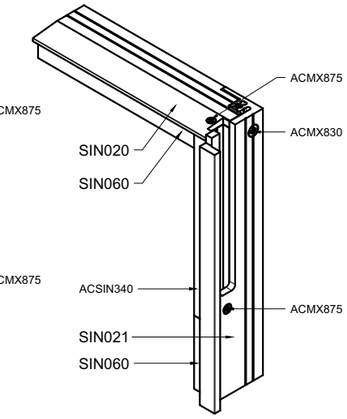


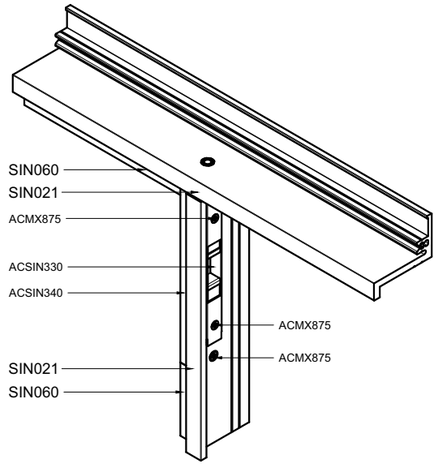


MONTAGE ACSIN340_3



aliplast
member of
CORIALIS

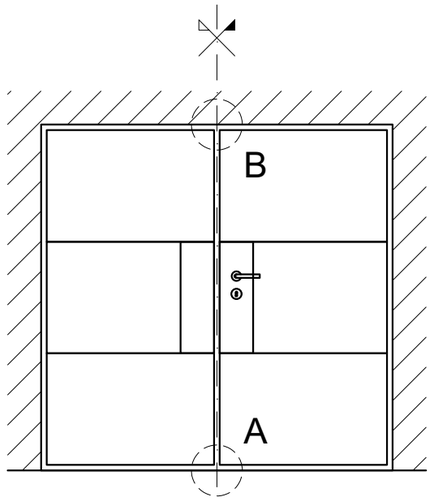


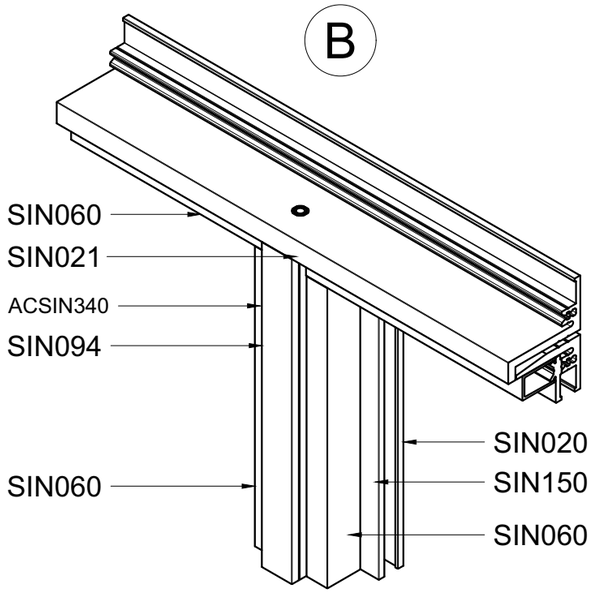


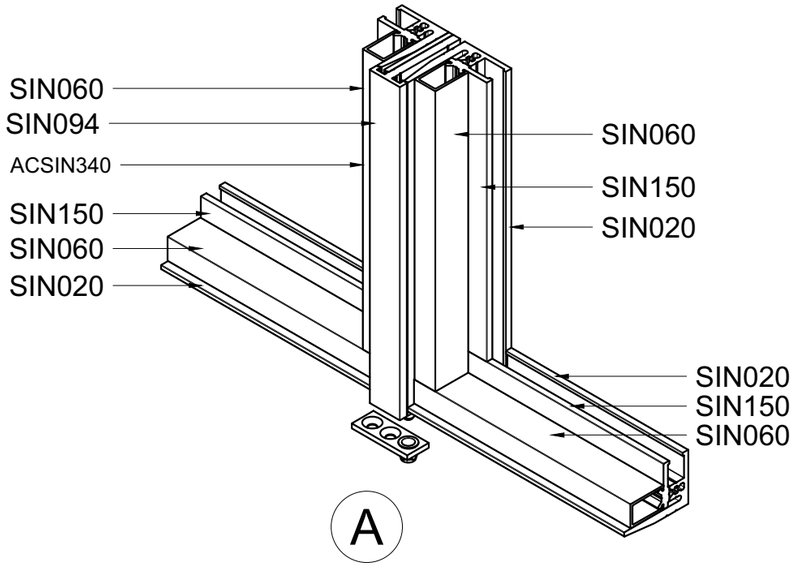


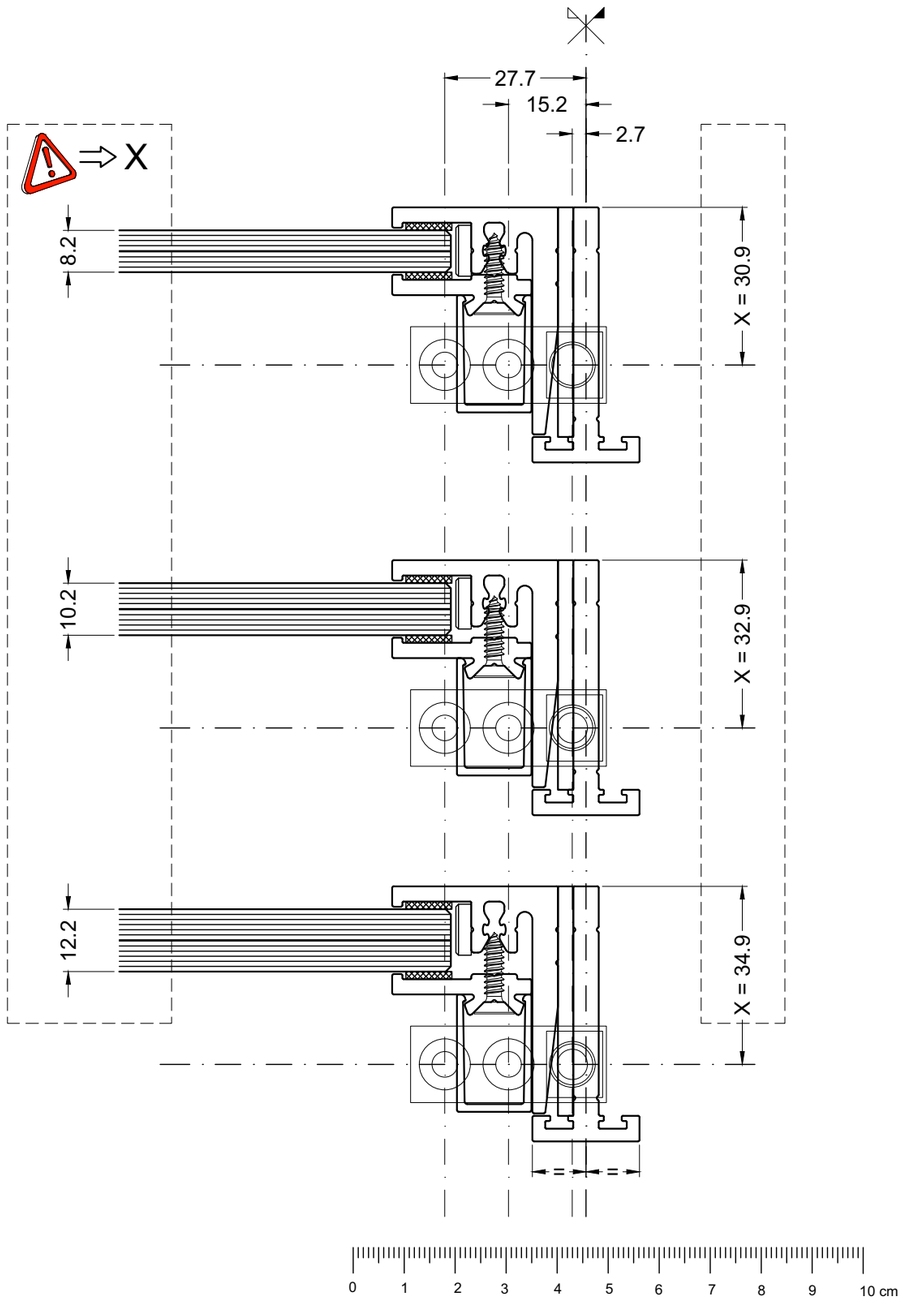


MONTAGE ACSIN340-SIN094_1

A

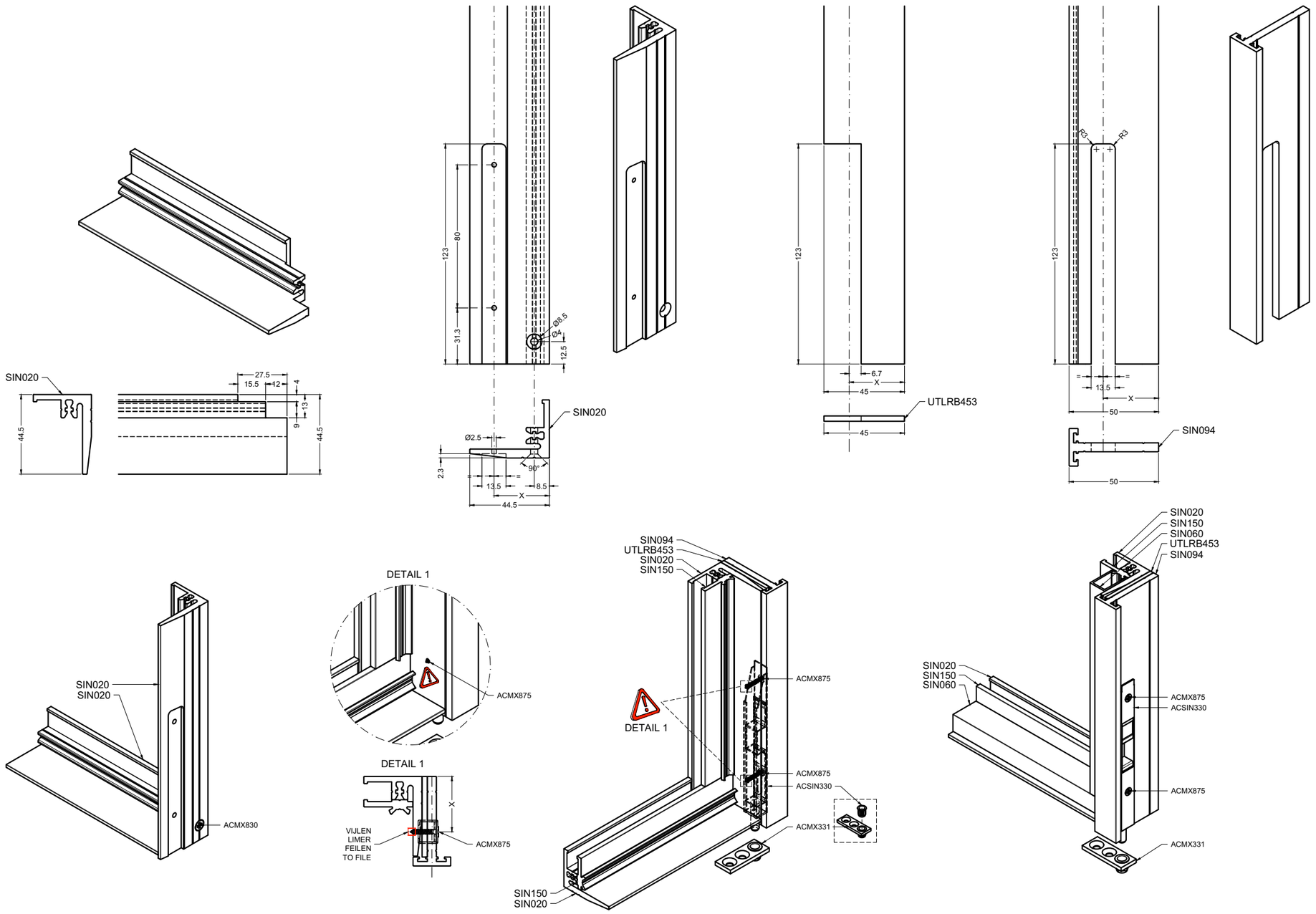


MONTAGE ACSIN340-SIN094_2

B

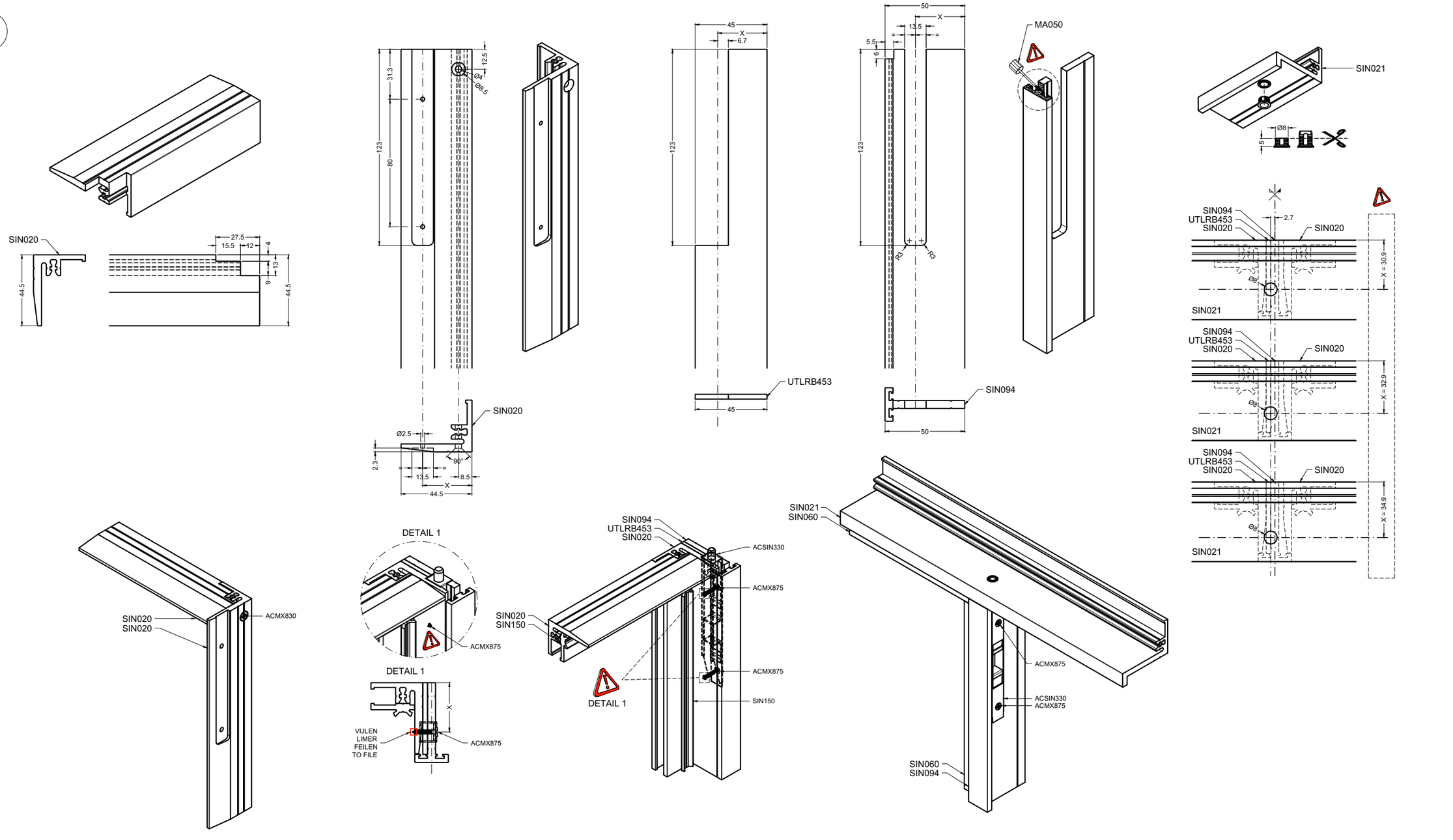


MONTAGE ACSIN340-SIN094_3

aliplast
member of
CORIALIS

WERKTEKENINGEN - DESSINS DE CONSTRUCTION - KONSTRUKTIONZEICHNUNGEN - CONSTRUCTION DRAWINGS

ACSIN401R/L
ACSIN402R/L

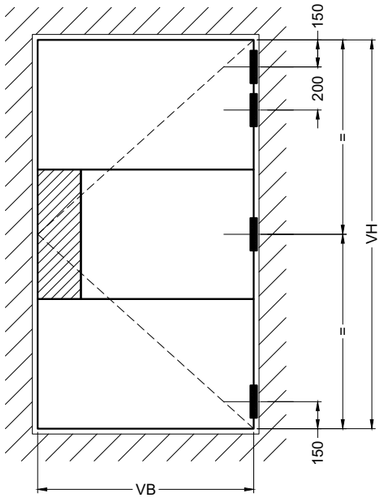


| | | | |
|---|---|---|---|
| VB | VLEUGELBREEDTE<br>LARGEUR VANTAIL<br>BREITE FLUGEL<br>WIDTH SASH | MAX 1250 MM | MAX 80 Kg |
| VH | VLEUGELHOOGTE<br>HAUTEUR D'OUVRANT<br>FLUGEL HOHE<br>VENT HEIGHT | MAX 2500 MM | |

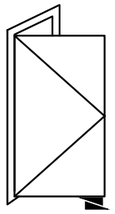

VLEUGEL ONDERSTEUNEN MET SPIE
SUPPORTEZ LE VANTAIL AVEC UNE CALE
TÜRFLÜGEL MIT EINEM KEIL UNTERSTÜTZEN
SUPORT DOOR LEAF WITH A WEDGE

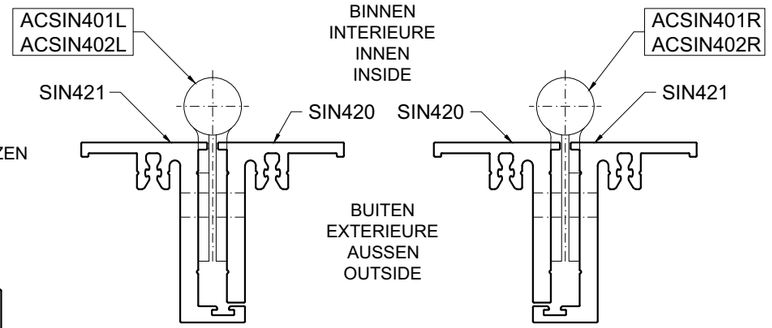


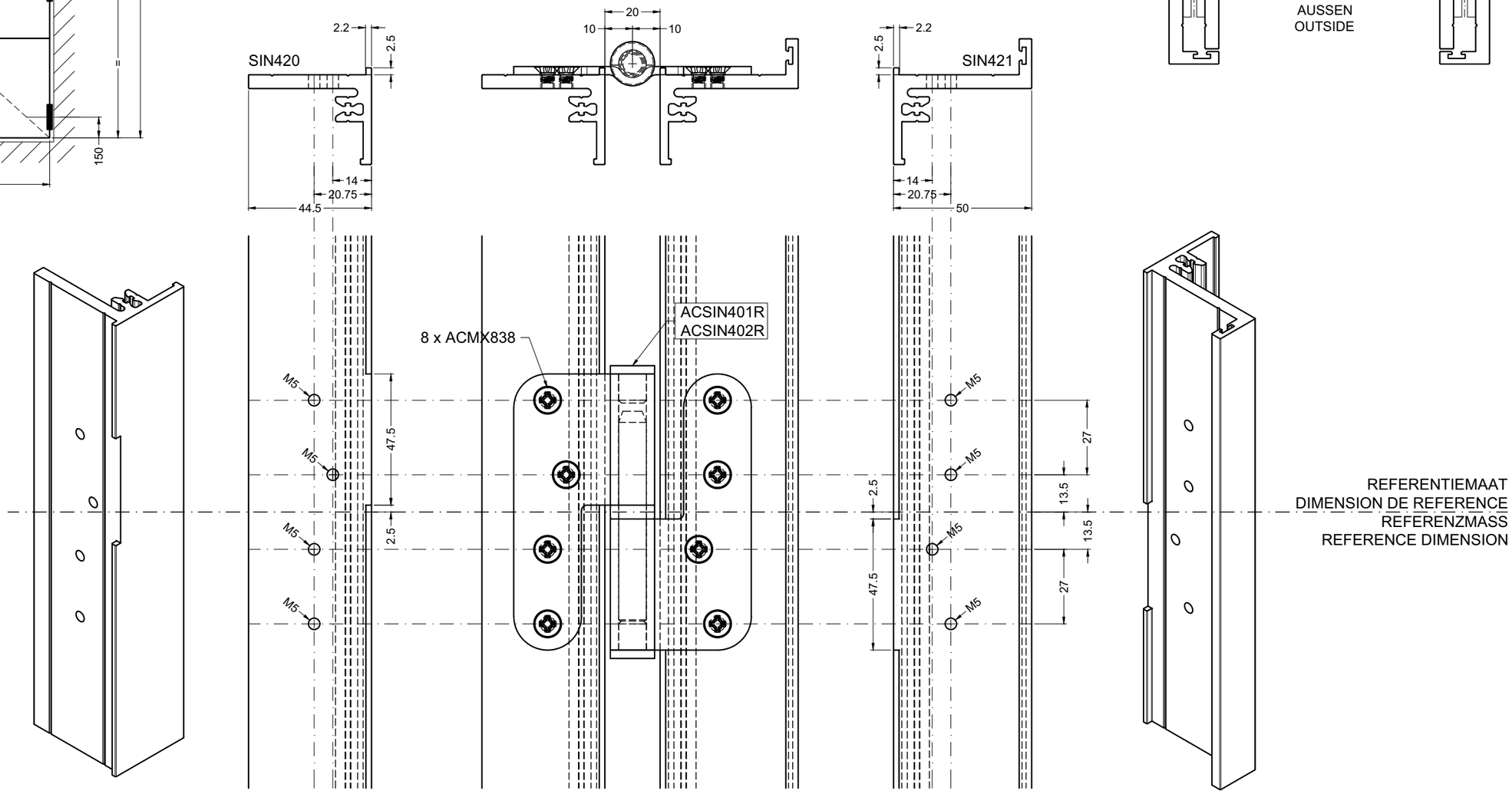


REFERENTIEMAAT
DIMENSION DE REFERENCE
REFERENZMASS
REFERENCE DIMENSION

MONTAGE ACSIN401-402

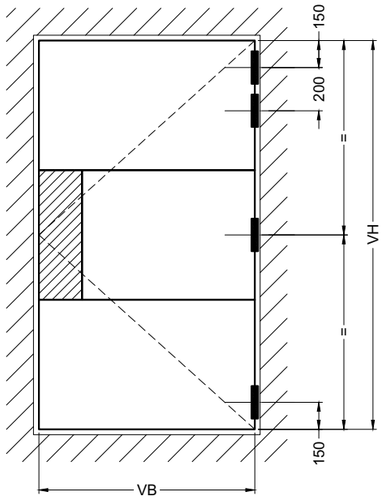


| | | | |
|---|---|---|---|
| VB | VLEUGELBREEDTE<br>LARGEUR VANTAIL<br>BREITE FLUGEL<br>WIDTH SASH | MAX 1000 MM | MAX 60 Kg |
| VH | VLEUGELHOOGTE<br>HAUTEUR D'OUVRANT<br>FLUGEL HOHE<br>VENT HEIGHT | MAX 2300 MM | |

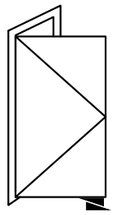

VLEUGEL ONDERSTEUNEN MET SPIE
SUPPORTEZ LE VANTAIL AVEC UNE CALE
TÜRFLÜGEL MIT EINEM KEIL UNTERSTÜTZEN
SUPORT DOOR LEAF WITH A WEDGE

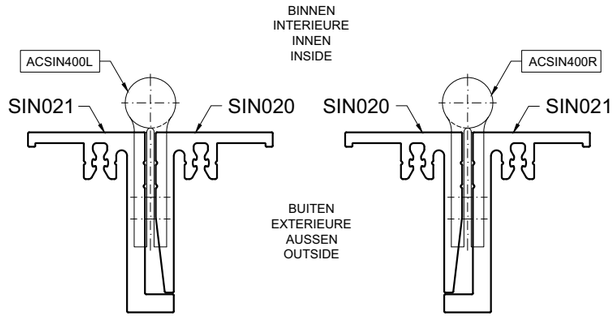


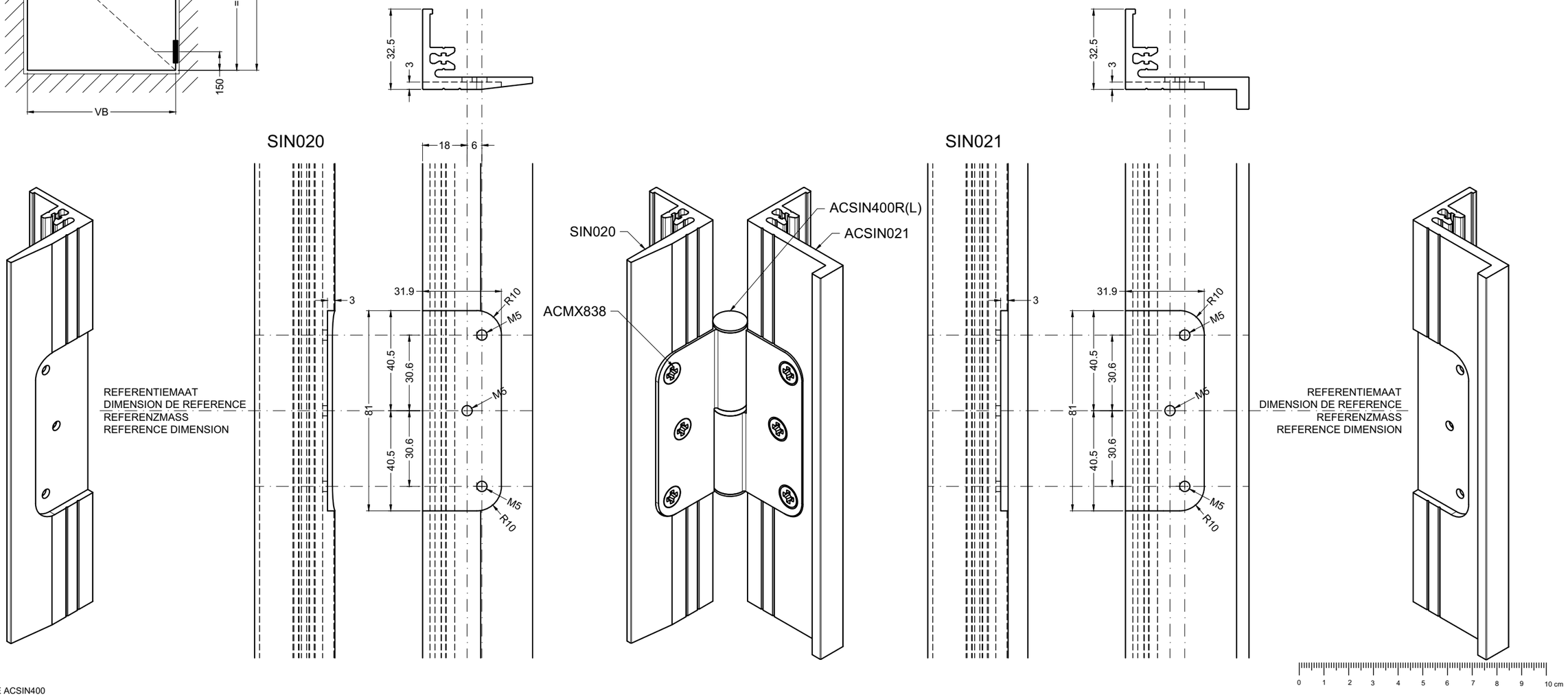


MONTAGE ACSIN400

SCHUIFDEUR-PORTE COULISSANTE-SCHIEBETUR-SLIDING DOOR
LOFT

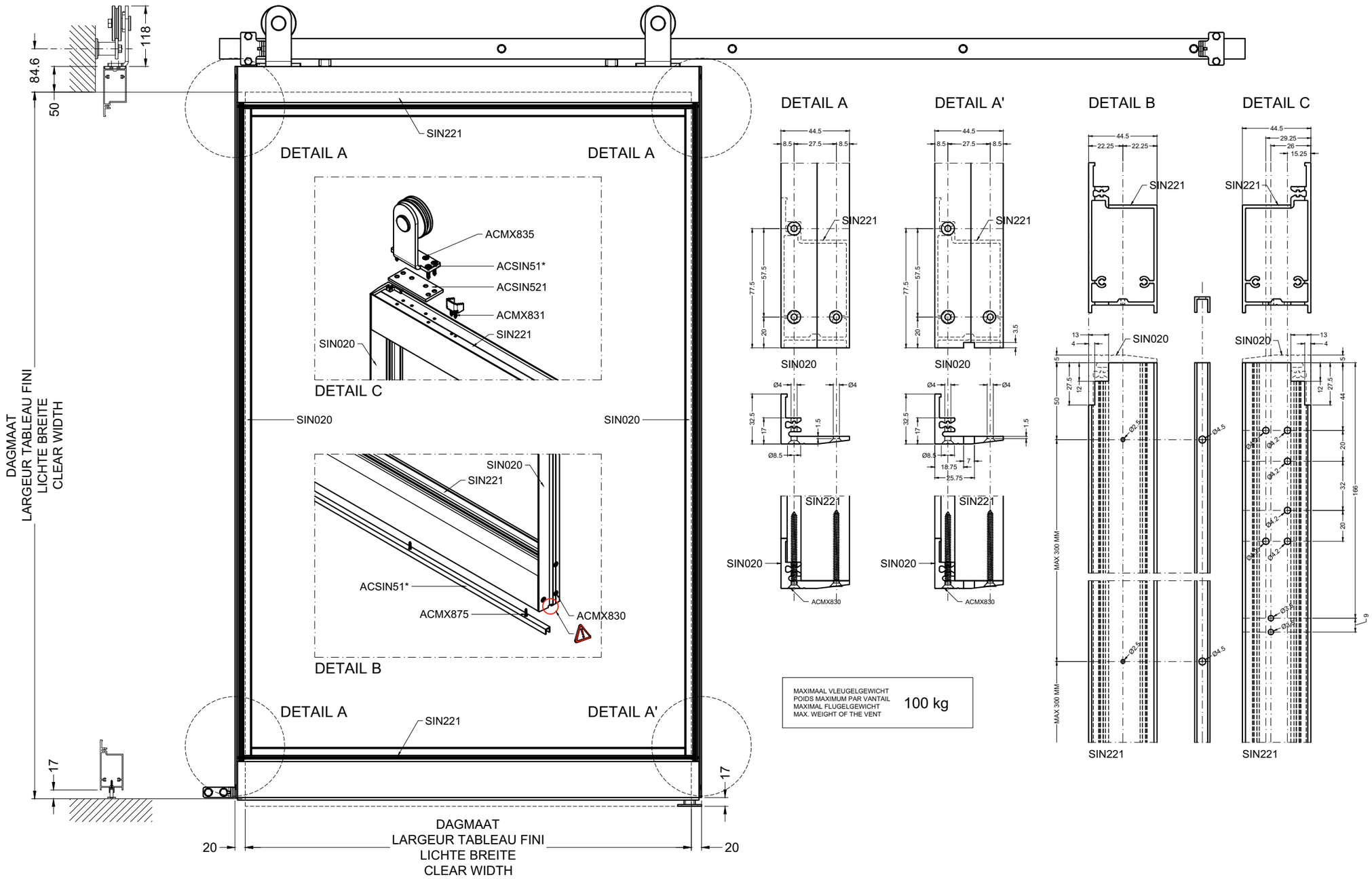


MONTAGE SCHUIF LOFT001

SCHUIFDEUR-PORTE COULISSANTE-SCHIEBETUR-SLIDING DOOR
MODERN

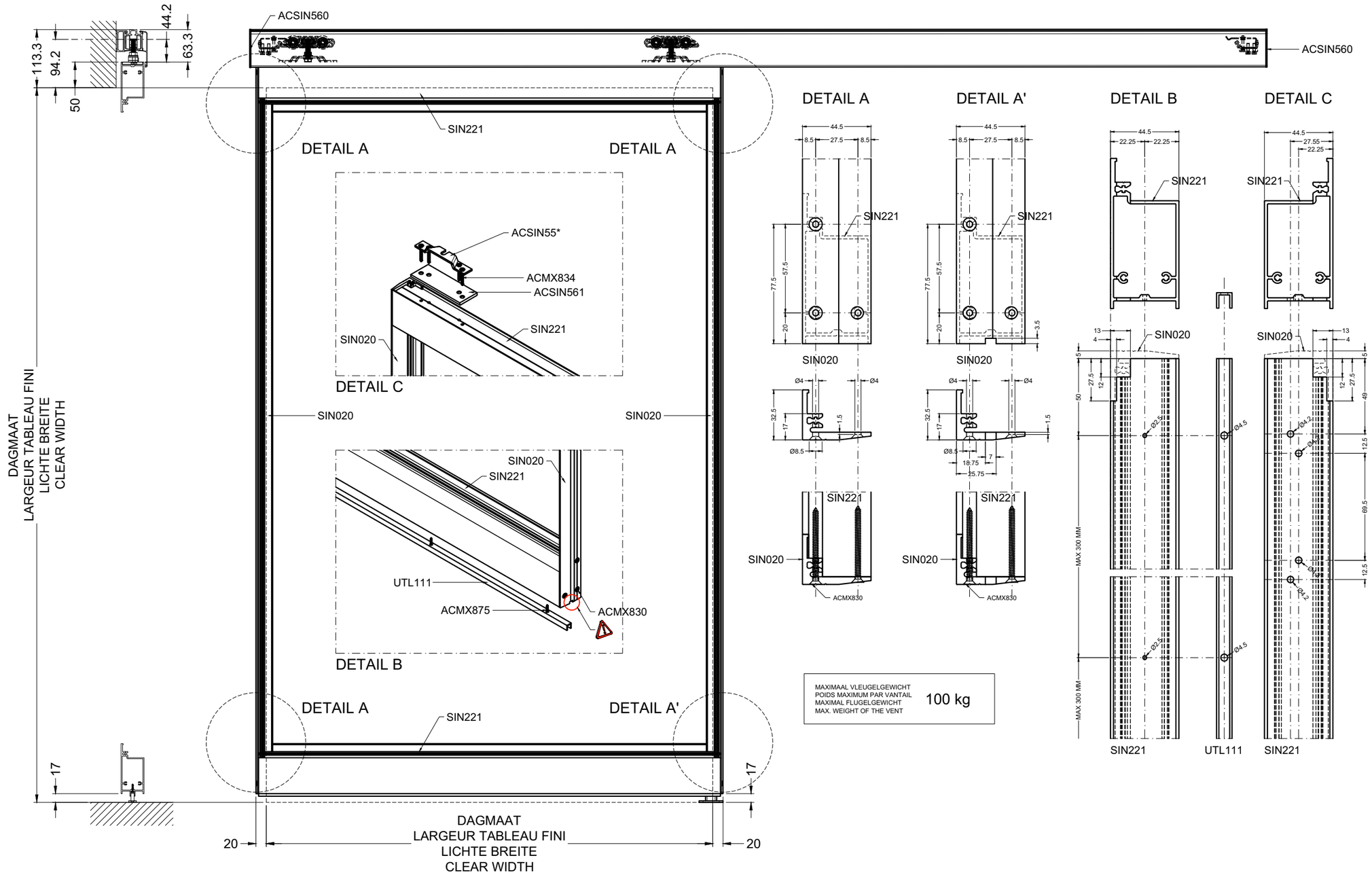


MONTAGE SCHUIF MODERN001

aliplast member of CORIALIS

WERKTEKENINGEN - DESSINS DE CONSTRUCTION - KONSTRUKTIONZEICHNUNGEN - CONSTRUCTION DRAWINGS

PROFIELOVERZICHT
APERCU DES PROFILES
PROFILUEBERSICHT
PROFILE OVERVIEW

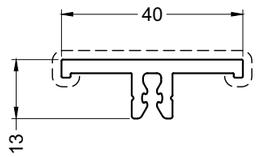


SIN030

oppervlakte: 178.62 mm2
omtrek: 132.12 mm
gewicht: 482.27 g/m

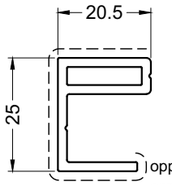


SIN090

oppervlakte: 162.1 mm2
omtrek: 120.83 mm
gewicht: 437.66 g/m

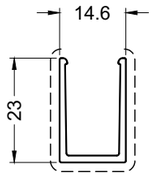


SIN060

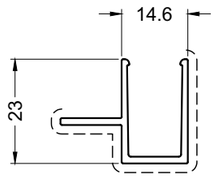


SIN061

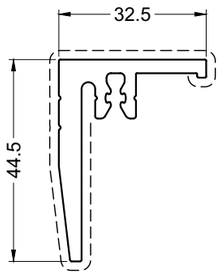


SIN020

oppervlakte: 341.78 mm2
omtrek: 191.31 mm
gewicht: 922.88 g/m

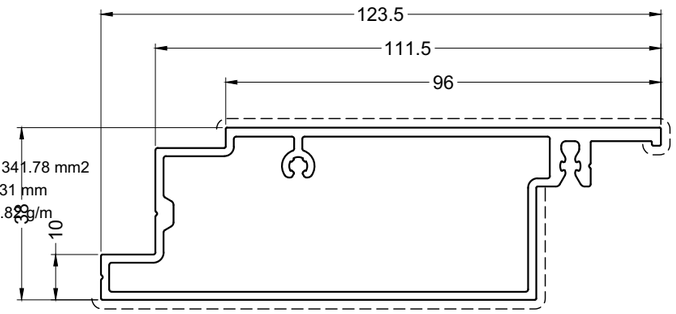


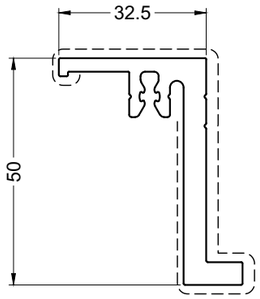


SIN021

oppervlakte: 435.53 mm2
omtrek: 220.37 mm
gewicht: 1175.93 g/m

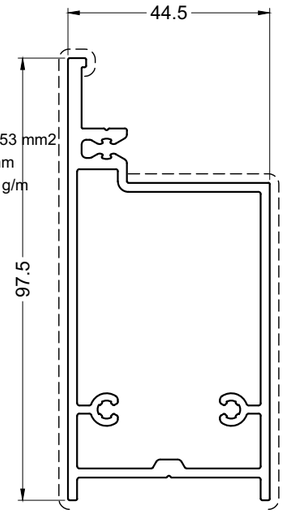


SIN221

oppervlakte: 435.28 mm2
omtrek: 209.11 mm
gewicht: 1175.26 g/m

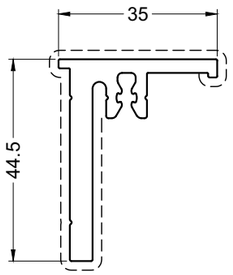


SIN420

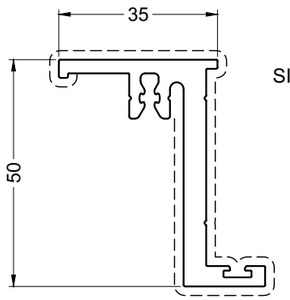


SIN421

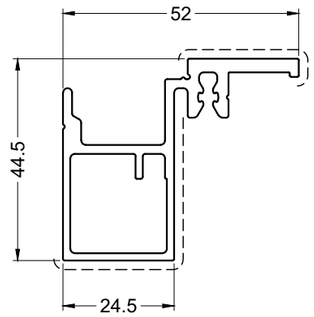


SIN320

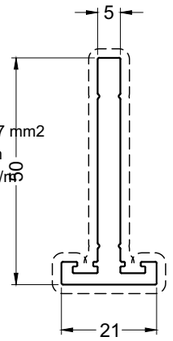


SIN121

oppervlakte: 490.47 mm2
omtrek: 251.46 mm
gewicht: 1324.27 g/m

SIN094

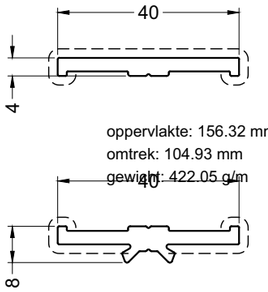


SIN035

oppervlakte: 156.32 mm2
omtrek: 104.93 mm
gewicht: 422.05 g/m

SIN050

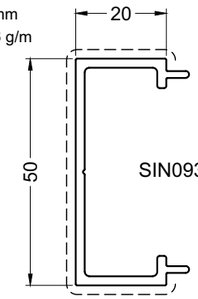


SIN093

oppervlakte: 372.41 mm2
omtrek: 252.3 mm
gewicht: 1005.51 g/m

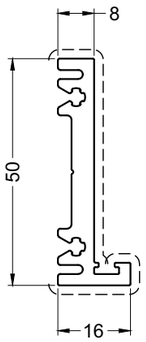


SIN092

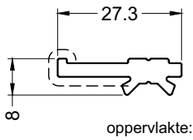


SIN150

oppervlakte: 116.23 mm2
omtrek: 77.74 mm
gewicht: 313.81 g/m

oppervlakte: 80.35 mm2
omtrek: 117.37 mm
gewicht: 216.95 g/m