# Main Index

W Index — Index/Updates ..... A01 - A03

A W — Profiles

Specification Pages ..... A04 - A08
Technical Information ..... A09 - A16
Scale Profile Drawings ..... A17 - A36

B W — Accessories

Photos & Drawings ..... B03 - B35

C W — Sections

Standard Scale Elevations ..... C03 - C41
PAS24 Scale Elevations ..... C42 - C69

D W — Statics ..... D01 - D02

E W — Construction Drawings

Corner Joint Details ..... E03
Crimping Details ..... E04
Cill Drainage ..... E05
Angle Sub Cill ..... E06

Open Out
Drainage Details ..... E07 - E08
Single Lock Overview ..... E09
Lock Details ..... E10 - E13
Double Door Lock Overview ..... E14
Double Door using W20048 ..... E15
W20124 Lock Selection ..... E16
Double Door Thresholds Using W20046 ..... E17 - E18
Low Threshold ACW20270 Detail ..... E19
Hinge Details ..... E20 - E21
90° Restrictor Installation ..... E22
PAS24 Full Requirements ..... E23 - E24

# Main Index

**Open In**

Drainage Details..... E26 - E27
Single Lock Overview..... E28
Lock Details..... E29 - E32
Double Door Lock Overview..... E33
Double Door using W20048..... E34
W0129 Open In Lock Selection..... E35
Double Door Thresholds Using W21048..... E36 - E37
Low Threshold ACW20270 Detail..... E38
Hinge Details..... E39 - E40
90° Restrictor Installation..... E41
PAS24 Full Requirements..... E42- E43

Glazing Chart..... E45 - E48
W20015 Bay Pole Details..... E49
W20017 Bay Pole Details..... E50
Fixing Strap Guide..... E51

F W

**Sawing Table**

Open Out Single Door..... F03 - F04
Open Out Double Door..... F05 - F06
Open In Single Door..... F07 - F08
Open In Double Door..... F09 - F10
PAS24 Open Out Single Door..... F11 - F13
PAS24 Open Out Double Door..... F14 - F15
PAS24 Open In Single Door..... F16 - F17
PAS24 Open In Double Door..... F18 - F19

# Updates

| DATE | PAGE | DESCRIPTION |
|---|---|---|
| 12-07-17 | B.27, E.25 & E.29 | Added left and right details for ACW20138 |
| | C.67 & C.81 | Amended handle details |
| 13-02-18 | A12, A25, A27, A29 & E05 | Added Sections W20125N |
| | B31 & E04 | Updated ACW910 to ACW910N |
| 13-03-18 | A14 | Amended ETC047 Ixx and Iyy values. |
| 05-09-18 | ALL SECTIONS | Added Sections;<br>W20111 - Long Leg Outerframe<br>W20112 - Long Leg Outerframe<br>W20126 - Door Sash with Eurogroove<br>W20131 - Reinforced Tilt and Turn Mullion<br>W20139 - Reinforced Transom / Mullion<br>W20171 - Internal Square Bead<br>W20176 - 36mm Glazing Bead<br><br>Added Accessories;<br>ACCY4530S1 - 45/30 High Security Cylinder |
| 24-09-20 | ALL SECTIONS | Low ramp threshold option added<br>W20124 - Open Out Sash Added<br>W20126 - Open Out Sash Added<br>W20129 - Open In Sash Added<br>W20168 Superseded by W20168N (Check Availability of W20168)<br>W20170 Superseded by W20170N (Check Availability of W20170)<br>W20171 Superseded by W20171N (Check Availability of W20171)<br>PAS24 option for doors added |
| 14-10-20 | ALL SECTIONS | ACW20065 has now been superceded by ACW20365 (open out) & ACW20465 (open in)<br>W20271 Removed<br>ACW20061 superseded by ACSM001N<br>ACW20161 superseded by ACSM025L/R<br>ACW20058 superseded by ACCY3545NKTT |
| 03-05-21 | ALL SECTIONS | Manual split between Doors and Windows |
| | ALL SECTIONS | Profiles;<br>W20037 Transom Removed (Check Availability)<br>W20137 Transom Removed (Check Availability)<br>W20124 Lock Back Set Changed from 55mm to 65mm<br>W20126 Sash Removed<br>W20135N renamed to W20135 |

# Specification

| DATE | PAGE | DESCRIPTION |
|---|---|---|
| | | **Accessories Added;**<br>**ACDV746 600mm Shootbolt Extension**<br>**ACET844 2mm External Low Line Gasket**<br>**ACPD690 Roller Latch**<br>**ACSM060 Handle**<br>**ACSM061 L/R Dummy Handle**<br>**ACSM062 Handle**<br>**ACW20065 Lock Re-introduced**<br>**ACW927 Drill Jig**<br>**ACW928 Drill Jig**<br><br>**Accessories Removed;**<br>**ACCY4535NKTT Euro Cylinder**<br>**ACET480 Handle**<br>**ACW20115 Cleat**<br>**ACW20116 Cleat**<br>**ACW20238 Pre-Prepped Lock Box**<br>**ACW20365 Lock**<br>**ACW20366 Lock**<br>**ACW921 Punches** |

## GENERAL DESCRIPTION

The "Alitherm Heritage" door system described in this manual is designed to offer a modern aluminium thermally broken replacement to steel doors. Taking inspiration from traditional steel doors, Alitherm Heritage features signature slim sightlines and attractive aesthetic contours coupled with polyamide thermal break technology giving Alitherm Heritage enhanced thermal performance and narrow sightlines.

The Alitherm Heritage is designed to be built as a series of horizontal or vertical modules which can be stacked using horizontal couplers to form a multi-part door featuring a specially design drip bar between modules.

Applications:

Doors:

- Single open out & open in doors
- Double open out & open in doors

Corner assembly of Alitherm Heritage is crimping only.

# Specification

## RECOMMENDED DESIGN DOOR LIMITATIONS

**Doors**

**Door Sashes:**

Maximum Width: 900mm
Minimum Width: 600mm
Maximum Height: 2100mm
Minimum Height: 1000mm (leaving 3 locking points)
Maximum Weight: 60kg

For advise on door sizes outside of the recommended design limitations, please contact the Technical Department at Smart Systems Ltd Tel: 01934 876100

## PROFILE SPECIFICATION

The door frames are constructed of aluminium alloy extrusion to BS EN 755-9 and BS EN 12020, extruded to 6063 T6 alloy. The internal and external extrusions are separated with a polyamide thermal break.

The external aluminium alloy extrusion is pre-treated and finished either:-

Anodised to BS 3987: 1987, grade AA25 to a natural self colour.

a) Anodised to BS 3987 : 1987, grade AA25 to a natural colour.

b) Polyester powder organic coating to BS 6496. Dual colour is available.

## GENERAL MANUFACTURING

Outer and vent frames are made by cutting the frame profiles with accurate 45° mitred ends using Tungsten Carbide Tipped Saw Blades, operating at approximately 3000 rpm.

The corners are joined using the Alitherm Heritage crimping tools to form a cold forged corner joint (made by deforming small slugs of metal into the groove of the corner cleat).

The ends of transoms and mullions are profiled to fit the frame and fixed using self-tapping screws with a small joint sealant.

On polyester powder coated finishes, great care should be taken to avoid getting gap sealer on visible surfaces and should be removed as soon as possible with a clean cloth.

Care should be exercised when using products not supplied by Smart Systems Ltd as no responsibility can be accepted.

# Specification

## DOOR DRAINAGE

As with all dry glazed systems, it is recommended that the door system is adequately drained and ventilated. Refer to drainage details in manual, if in doubt ask The Technical Department.

## OUTER FRAME MANUFACTURING INFORMATION

The outer frame members are cut with 45° mitred ends to the overall size required, measured to the longest point of the metal.

Prior to corner crimping the centre line position of any transoms or mullions should be marked on the outer frame members. Where the transom/mullion runs right through, it should be marked out on both jambs or head and cill members in pairs to ensure accurate alignment of the sections.

Using the marked centre line, Drill the transom/mullion fixing holes using a 5mm dia. drill bit.

Corners are formed by coating the cut faces to be joined with a suitable small gap sealer. Into the mitred corner insert the cleat glue and the required corner cleats and, where required, the aluminium corner chevrons. The two mitred ends are then brought together and crimped. The small gap sealer ensures a permanent joint and guards against the ingress of moisture and joint movement. After crimping the corner joint, special care should be taken to ensure any excess sealer is removed from painted surfaces.

Transoms or mullions are cut with square ends to the sizes calculated on the cutting formula sheets. The ends are then profiled to allow them to fit into the outer frame. Special tooling is available on request to profile the end of transom/mullion.

Prior to fixing of transoms and mullions smear the cut ends with a suitable small gap sealer. After fixing, special care should be taken to ensure any excess is cleared from painted surfaces.

## SASH

Corners are formed by coating the cut faces to be joined with a suitable gap sealer. In the mitred corner insert the cleat glue and the required corner cleats and chevrons. The mitred ends are then brought together and crimped. The small gap sealer ensures a permanent joint and guards against the ingress of moisture and joint movement. Care should be taken to ensure any excess sealer is removed from the surfaces.

The cutting sizes produce sash frames with a cavity of 13mm.

When fixing, the friction stays into both the outer and vent frame, care should be taken to ensure that holes are located on 'V' grooves in the aluminium extrusions.

# Specification

## INTERNALLY BEADED ADAPTOR FRAME

The internally beaded adaptor frame members are cut with 45° mitred ends to the overall size required, measured to the longest point of metal. Care should be taken when measuring and cutting the frame members as only nominal clearance is required when the assembled frame is fixed in the outer frame.

Corners are formed by coating the cut faces to be joined with a suitable small gap sealer. Into the mitred corner insert the cleat glue and a corner cleat and the required corner chevrons. The small gap sealer ensures a permanent joint and guards against the ingress of moisture and joint movements. Care should be taken to ensure any excess sealer is removed from painted surfaces.

## GLAZING

All beads are cut to suit the glazing aperture on the fully assembled door for glazing either at factory or on site as required.

### EXTERNALLY BEADED GLAZING

Glazing beads are fitted to openings by cutting the horizontal beads square to head and cill of each sash. Vertical beads are cut at 45° or 90° both ends. Insert bottom beads and two setting blocks to ensure glass will be centralized in vertical dimension of opening (glazing blocks must be full width of cavity to fully support glass or sealed unit), then insert top bead followed by side beads. Finish glazing by insertion of internal gaskets all round.

### INTERNALLY BEADED GLAZING

Glazing beads are fitted to openings by cutting the horizontal beads square to head and cill of each sash and reverse adaptor area. Vertical beads are cut square at both ends. Insert bottom beads and two setting blocks to ensure glass will be centralized in vertical dimension of opening (glazing blocks must be full width of cavity to fully support glass or sealed unit), then insert top bead followed by side beads. Finish glazing by insertion of internal gaskets all round.

## Alitherm Heritage Door U Values

Please refer to the Smart Systems' Document L White Paper or contact the Technical Department.

## Specification

| Number | Picture | Page | Perim. mm | Mec. mm | Ix(cm4) wx(cm3) | Iy(cm4) wy(cm3) | Length | Pack pr. | MF | SA | KL | HP | M |
|---|---|---|---|---|---|---|---|---|---|---|---|---|---|
| **W20015** | REVERSE FOR OPEN IN 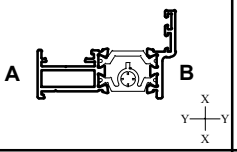  | A17 | 255 | 60 | 8.08 ----- 2.91 | 1.43 ----- 1.21 | 6.5 | 1 | ✓ | ✓ | ✓ | ✓ | ✓ |
| **W20016** | 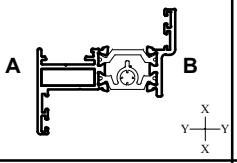  | A17 | 300 | 77 | 10.26 ----- 3.72 | 2.59 ----- 1.1 | 6.5 | 1 | ✓ | ✓ | ✓ | ✓ | ✓ |
| **W20017** | REVERSE FOR OPEN IN 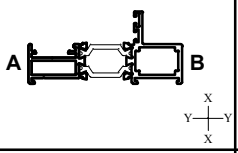  | A17 | 297 | 74 | 27.70 ----- 6.35 | 2.37 ----- 2.41 | 6.5 | 1 | ✓ | ✓ | ✓ | ✓ | ✓ |
| **W20027** | OPEN OUT 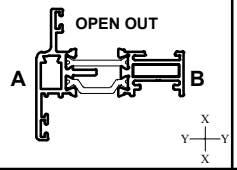  | A19 | 321 | 74 | 10.10 ----- 3.24 | 2.43 ----- 1.08 | 6.5 | 1 | ✓ | ✓ | ✓ | ✓ | ✓ |
| **W20038** | 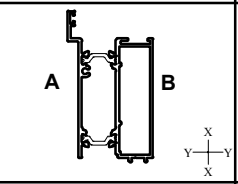  | A22 | 453 | 156 | 11.55 ----- 3.85 | 4.84 ----- 2.41 | 6.5 | 1 | ✓ | ✓ | ✓ | ✓ | ✓ |
| **W20039** | 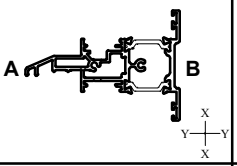  | A24 | 479 | 173 | 28.96 ----- 5.67 | 5.79 ----- 2.00 | 6.5 | 1 | ✓ | ✓ | ✓ | ✓ | ✓ |
| **W20046** | OPEN OUT (W20124) 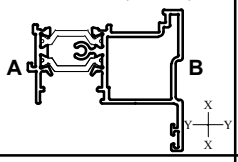  | A23 | 284 | 101 | 12 ----- 3.75 | 5.08 ----- 2.54 | 6.5 | 1 | ✓ | ✓ | ✓ | ✓ | ✓ |
| **W20048N** | OPEN OUT (W20027) 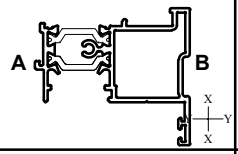  | A23 | 310 | 78 | 11.55 ----- 3.55 | 4.84 ----- 2.41 | 6.5 | 1 | ✓ | ✓ | ✓ | ✓ | ✓ |
| **W20051** | 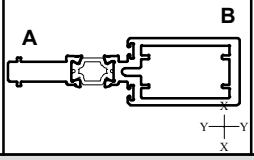  | A25 | 296 | 272 | 53.54 ----- 9.88 | 4.77 ----- 3.56 | 6.5 | 1 | ✓ | ✓ | ✓ | ✓ | ✓ |

A = Outside
B = Inside

MF = Mill Finish
SA = Silver Anodised
KL = Basic Colour
HP = Special Colour
M = Dual Colour

smart architectural aluminium

# Alitherm Heritage Door

**PROFILES : TECHNICAL INFORMATION**

| Number | Picture | Page | Perim. mm | Mec. mm | Ix(cm4) wx(cm3) | Iy(cm4) wy(cm3) | Length | Pack pr. | MF | SA | KL | HP | M |
|---|---|---|---|---|---|---|---|---|---|---|---|---|---|
| **W20054** | 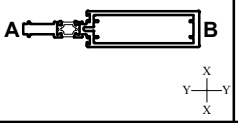  | A25 | 376 | 206 | 146.55 ----- 19.89 | 8.24 ----- 6.15 | 6.5 | 1 | ✓ | ✓ | ✓ | ✓ | ✓ |
| **W20065** | | A25 | 57 | 10 | - ----- - | - ----- - | 5 | 1 | ✓ | ✓ | ✓ | ✓ | |
| **W20066** | 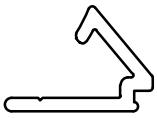  | A25 | 74 | 15 | - ----- - | - ----- - | 5 | 1 | ✓ | ✓ | ✓ | ✓ | |
| **W20069** | 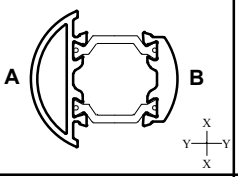  | A35 | 192 | 71 | 5.05 ----- 2.55 | 2.00 ----- 1.12 | 5 | 1 | ✓ | ✓ | ✓ | ✓ | ✓ |
| **W20111** | 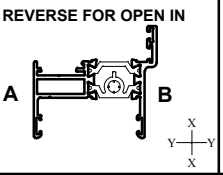  | A18 | 301 | 100 | 10.81 ----- 4.00 | 3.15 ----- 1.37 | 6.5 | 1 | ✓ | ✓ | ✓ | ✓ | ✓ |
| **W20112** | 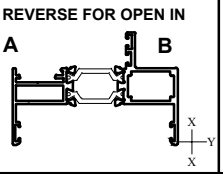  | A18 | 340 | 113 | 22.77 ----- 6.14 | 3.48 ----- 1.50 | 6.5 | 1 | ✓ | ✓ | ✓ | ✓ | ✓ |
| **W20124** | 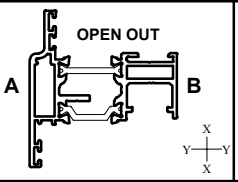  | A19 | 314 | 90 | 12.38 ----- 3.99 | 4.81 ----- 1.80 | 6.5 | 1 | ✓ | ✓ | ✓ | ✓ | ✓ |
| **W20125N** | 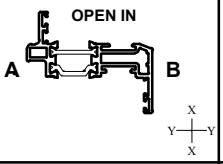  | A20 | 321 | 88 | 14.15 ----- 4.40 | 2.7 ----- 1.2 | 6.5 | 1 | ✓ | ✓ | ✓ | ✓ | ✓ |
| **W20127** | 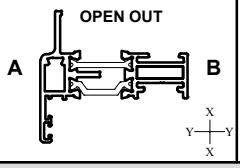  | A19 | 307 | 74 | 12.74 ----- 4.68 | 2.27 ----- 1.00 | 6.5 | 1 | ✓ | ✓ | ✓ | ✓ | ✓ |

A = Outside
B = Inside

MF = Mill Finish
SA = Silver Anodised
KL = Basic Colour
HP = Special Colour
M = Dual Colour



ISSUED: MAY 2021

# Alitherm Heritage Door

**PROFILES : TECHNICAL INFORMATION**

| Number | Picture | Page | Perim. mm | Mec. mm | Ix(cm4) wx(cm3) | Iy(cm4) wy(cm3) | Length | Pack pr. | MF | SA | KL | HP | M |
|---|---|---|---|---|---|---|---|---|---|---|---|---|---|
| **W20129** | OPEN IN 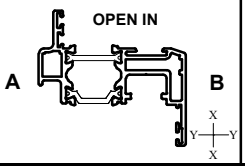  | A20 | 365 | 74 | 17.01 ----- 5.31 | 4.54 ----- 1.78 | 6.5 | 1 | ✓ | ✓ | ✓ | ✓ | ✓ |
| **W20133** | 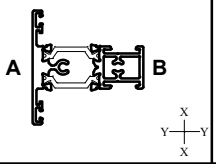  | A22 | 258 | 94 | 9.94 ----- 3.43 | 2.89 ----- 1.2 | 6.5 | 1 | ✓ | ✓ | ✓ | ✓ | ✓ |
| **W20135** | 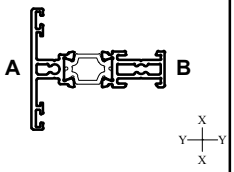  | A21 | 270 | 64 | 7.37 ----- 4.12 | 1.82 ----- 0.86 | 6.5 | 1 | ✓ | ✓ | ✓ | ✓ | ✓ |
| **W20136** | 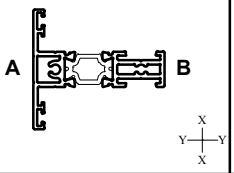  | A21 | 270 | 64 | 7.37 ----- 4.12 | 1.82 ----- 0.86 | 6.5 | 1 | ✓ | ✓ | ✓ | ✓ | ✓ |
| **W20138** | 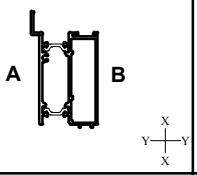  | A23 | 434 | 154 | 12.69 ----- 5.36 | 27.16 ----- 7.18 | 6.5 | 1 | ✓ | ✓ | ✓ | ✓ | ✓ |
| **W20148** | OPEN IN (W20125N) 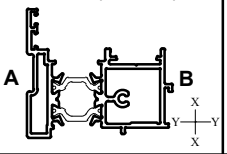  | A24 | 341 | 84 | 13.64 ----- 4.29 | 5.56 ----- 2.97 | 6.5 | 1 | ✓ | ✓ | ✓ | ✓ | ✓ |
| **W20149** | OPEN IN (W20129) 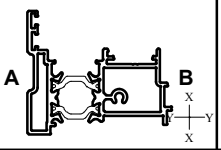  | A24 | 342 | 85 | 14.08 ----- 4.24 | 5.13 ----- 2.67 | 6.5 | 1 | ✓ | ✓ | ✓ | ✓ | ✓ |
| **W20165** | 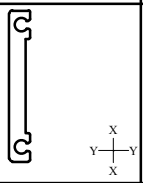  | A27 | 68 | 32 | - ----- - | - ----- - | 4 | 1 | ✓ | ✓ | ✓ | ✓ | |
| **W20166** | 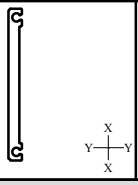  | A27 | 100 | 48 | - ----- - | - ----- - | 4 | 1 | ✓ | ✓ | ✓ | ✓ | |

A = Outside
B = Inside

MF = Mill Finish
SA = Silver Anodised
KL = Basic Colour
HP = Special Colour
M = Dual Colour

# Alitherm Heritage Door

**PROFILES : TECHNICAL INFORMATION**

| Number | Picture | Page | Perim. mm | Mec. mm | Ix(cm4) wx(cm3) | Iy(cm4) wy(cm3) | Length | Pack pr. | MF | SA | KL | HP | M |
|---|---|---|---|---|---|---|---|---|---|---|---|---|---|
| **W20168N** | 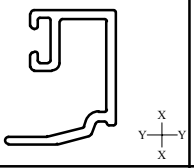 | A29 | 104 | 27 | -<br>-----<br>- | -<br>-----<br>- | 5 | 1 | ✓ | ✓ | ✓ | ✓ | |
| **W20170N** | 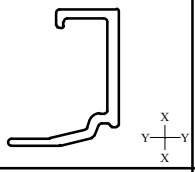 | A29 | 77 | 25 | -<br>-----<br>- | -<br>-----<br>- | 4 | 1 | ✓ | ✓ | ✓ | ✓ | |
| **W20171N** | 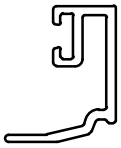 | A29 | 99 | 22 | -<br>-----<br>- | -<br>-----<br>- | 4 | 1 | ✓ | ✓ | ✓ | ✓ | |
| **W20172** | 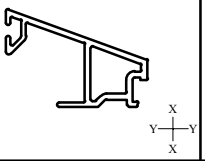 | A29 | 128 | 48 | -<br>-----<br>- | -<br>-----<br>- | 6.5 | 1 | ✓ | ✓ | ✓ | ✓ | |
| **W20173** | 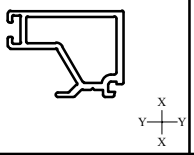 | A29 | 105 | 50 | -<br>-----<br>- | -<br>-----<br>- | 6.5 | 1 | ✓ | ✓ | ✓ | ✓ | |
| **W20175** | 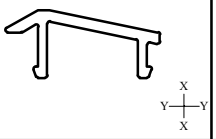 | A27 | 69 | 23 | -<br>-----<br>- | -<br>-----<br>- | 4 | 1 | ✓ | ✓ | | | |
| **W20270** | 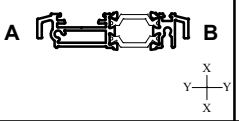  | A33 | 283 | 39.5 | 13.1<br>-----<br>4.08 | 0.57<br>-----<br>0.71 | 6.5 | 1 | | ✓ | | | |
| **W20272** | OPEN OUT 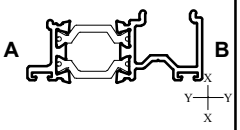  | A33 | 205 | 24.9 | 4.35<br>-----<br>1.69 | 0.54<br>-----<br>0.67 | 6.5 | 1 | ✓ | ✓ | ✓ | ✓ | ✓ |
| **W20274** | OPEN IN 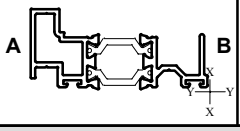  | A33 | 219 | 23.1 | 8.07<br>-----<br>2.59 | 1.09<br>-----<br>1.12 | 6.5 | 1 | ✓ | ✓ | ✓ | ✓ | ✓ |

A = Outside
B = Inside

MF = Mill Finish
SA = Silver Anodised
KL = Basic Colour
HP = Special Colour
M = Dual Colour

# Alitherm Heritage Door

**PROFILES : TECHNICAL INFORMATION**

| Number | Picture | Page | Perim. mm | Mec. mm | Ix(cm4) wx(cm3) | Iy(cm4) wy(cm3) | Length | Pack pr. | MF | SA | KL | HP | M |
|---|---|---|---|---|---|---|---|---|---|---|---|---|---|
| **W20485** | 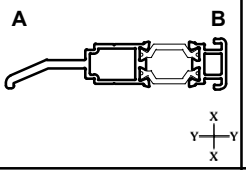 | A31 | 259 | 222 | 21.12<br>-----<br>4.67 | 0.76<br>-----<br>0.87 | 6.5 | 1 | ✓ | ✓ | ✓ | ✓ | ✓ |
| **W20486** | 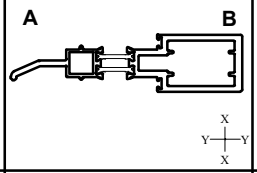 | A31 | 374 | 198 | 94.15<br>-----<br>12.25 | 6.57<br>-----<br>4.45 | 6.5 | 1 | ✓ | ✓ | ✓ | ✓ | ✓ |
| **W20487** | 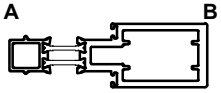 | A31 | 312 | 135 | 50.37<br>-----<br>8.96 | 6.47<br>-----<br>4.31 | 6.5 | 1 | ✓ | ✓ | ✓ | ✓ | ✓ |
| **W20488** | 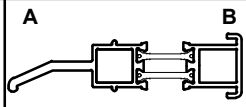 | A31 | 272 | 111 | 22.30<br>-----<br>4.84 | 1.01<br>-----<br>0.94 | 6.5 | 1 | ✓ | ✓ | ✓ | ✓ | ✓ |
| **W20489** | 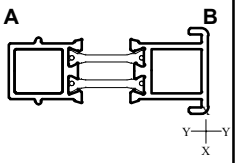 | A31 | 209 | 47 | 8.06<br>-----<br>2.81 | 0.92<br>-----<br>0.81 | 6.5 | 1 | ✓ | ✓ | ✓ | ✓ | ✓ |
| **W20490** | 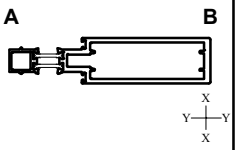 | A32 | 366 | 218 | 142.14<br>-----<br>18.83 | 10.86<br>-----<br>7.24 | 6.5 | 1 | ✓ | ✓ | ✓ | ✓ | ✓ |
| **W20492** | 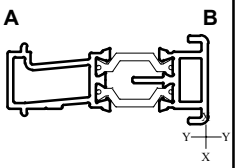 | A32 | 180 | 23 | 8.63<br>-----<br>3.02 | 0.88<br>-----<br>0.77 | 6.5 | 1 | ✓ | ✓ | ✓ | ✓ | ✓ |
| **DV515** | 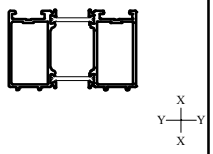 | A28 | 356 | 85 | 27.16<br>-----<br>7.76 | 14.38<br>-----<br>6.75 | 6.5 | 1 | ✓ | ✓ | ✓ | ✓ | ✓ |
| **ETC047** | 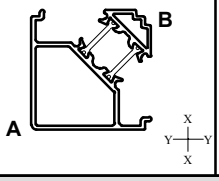 | A26 | 276 | 115 | 11.68<br>-----<br>4.67 | 11.68<br>-----<br>4.77 | 6.5 | 1 | ✓ | ✓ | ✓ | ✓ | ✓ |

A = Outside
B = Inside

MF = Mill Finish
SA = Silver Anodised
KL = Basic Colour
HP = Special Colour
M = Dual Colour

# Alitherm Heritage Door

**PROFILES : TECHNICAL INFORMATION**

| Number | Picture | Page | Perim. mm | Mec. mm | Ix(cm4) wx(cm3) | Iy(cm4) wy(cm3) | Length | Pack pr. | MF | SA | KL | HP | M |
|---|---|---|---|---|---|---|---|---|---|---|---|---|---|
| **ETC048** | 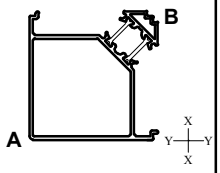 | A26 | 414 | 152 | 42.64<br>-----<br>11.72 | 42.64<br>-----<br>11.81 | 6.5 | 1 | ✓ | ✓ | ✓ | ✓ | ✓ |
| **ETC080** | 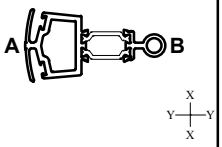 | A36 | 334 | 61 | 25.58<br>-----<br>5.47 | 4.88<br>-----<br>2.57 | 6.5 | 1 | ✓ | ✓ | ✓ | ✓ | ✓ |
| **ETC081** | 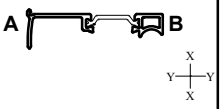 | A36 | 197 | 35 | 13.85<br>-----<br>3.8 | 0.36<br>-----<br>0.52 | 6.5 | 1 | ✓ | ✓ | ✓ | ✓ | ✓ |
| **ETC082** | 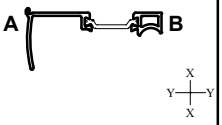 | A36 | 221 | 47 | 16.21<br>-----<br>4.19 | 1.15<br>-----<br>1.29 | 6.5 | 1 | ✓ | ✓ | ✓ | ✓ | ✓ |
| **ETC083** | 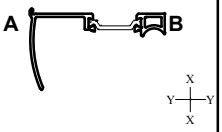 | A36 | 243 | 58 | 17.66<br>-----<br>4.32 | 2.64<br>-----<br>2.36 | 6.5 | 1 | ✓ | ✓ | ✓ | ✓ | ✓ |
| **ETC364** | 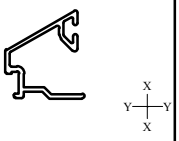 | A30 | 122 | 28 | -<br>-----<br>- | -<br>-----<br>- | 6.5 | 1 | ✓ | ✓ | ✓ | ✓ | |
| **ETC370** | 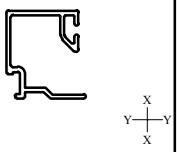 | A30 | 141 | 32 | -<br>-----<br>- | -<br>-----<br>- | 6.5 | 1 | ✓ | ✓ | ✓ | ✓ | |
| **ETC371** | 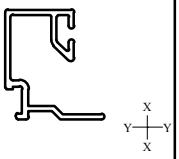 | A30 | 133 | 28 | -<br>-----<br>- | -<br>-----<br>- | 6.5 | 1 | ✓ | ✓ | ✓ | ✓ | |
| **ETC375** | 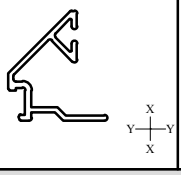 | A30 | 112 | 22 | -<br>-----<br>- | -<br>-----<br>- | 6.5 | 1 | ✓ | ✓ | ✓ | ✓ | |

A = Outside
B = Inside

MF = Mill Finish
SA = Silver Anodised
KL = Basic Colour
HP = Special Colour
M = Dual Colour



ISSUED: MAY 2021

# Alitherm Heritage Door

**PROFILES : TECHNICAL INFORMATION**

| Number | Picture | Page | Perim. mm | Mec. mm | Ix(cm4) wx(cm3) | Iy(cm4) wy(cm3) | Length | Pack pr. | MF | SA | KL | HP | M |
|---|---|---|---|---|---|---|---|---|---|---|---|---|---|
| **ETC376** | 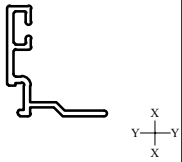 | A30 | 100 | 20 | -<br>-----<br>- | -<br>-----<br>- | 6.5 | 1 | ✓ | ✓ | ✓ | ✓ | |
| **ETC379** | 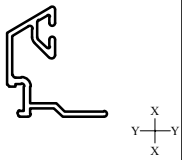 | A30 | 112 | 21 | -<br>-----<br>- | -<br>-----<br>- | 6.5 | 1 | ✓ | ✓ | ✓ | ✓ | |
| **ETC451** | 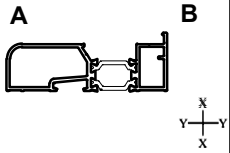 | A34 | 271 | 180 | 32.44<br>-----<br>7.29 | 3.46<br>-----<br>2.79 | 6.5 | 1 | ✓ | ✓ | ✓ | ✓ | ✓ |
| **ETC452** | 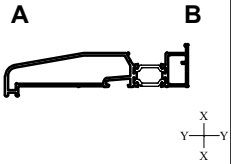 | A34 | 414 | 382 | 122.46<br>-----<br>18.03 | 6.01<br>-----<br>3.34 | 6.5 | 1 | ✓ | ✓ | ✓ | ✓ | ✓ |
| **ETC457** | 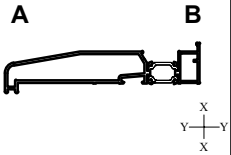 | A34 | 444 | 412 | 163.27<br>-----<br>21.60 | 6.79<br>-----<br>3.73 | 6.5 | 1 | ✓ | ✓ | ✓ | ✓ | ✓ |
| **ETC458** | 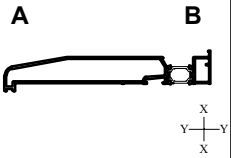 | A35 | 524 | 492 | 313.62<br>-----<br>32.63 | 8.87<br>-----<br>4.79 | 6.5 | 1 | ✓ | ✓ | ✓ | ✓ | ✓ |
| **ETC479N** | 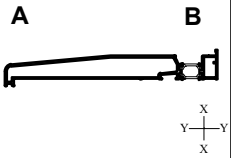 | A35 | 594 | 559 | 501.64<br>-----<br>44.04 | 9.72<br>-----<br>5.34 | 6.5 | 1 | ✓ | ✓ | ✓ | ✓ | ✓ |
| **ETC572** | 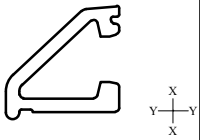 | A24 | 82 | 39 | -<br>-----<br>- | -<br>-----<br>- | 6.5 | 1 | ✓ | ✓ | ✓ | ✓ | |
| **ETC853** | 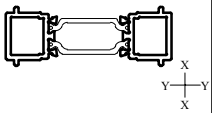 | A32 | 219 | 53.7 | 23.28<br>-----<br>6.65 | 1.94<br>-----<br>1.43 | 6.5 | 1 | ✓ | ✓ | ✓ | ✓ | ✓ |

A = Outside
B = Inside

MF = Mill Finish
SA = Silver Anodised
KL = Basic Colour
HP = Special Colour
M = Dual Colour

smart architectural aluminium

# Alitherm Heritage Door

**PROFILES : TECHNICAL INFORMATION**

| Number | Picture | Page | Perim. mm | Mec. mm | Ix(cm4) wx(cm3) | Iy(cm4) wy(cm3) | Length | Pack pr. | MF | SA | KL | HP | M |
|---|---|---|---|---|---|---|---|---|---|---|---|---|---|
| **ETD056** | 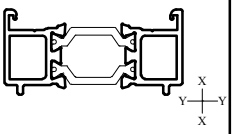 | A28 | 204.8 | 172 | 6.31<br>-----<br>2.69 | 0.82<br>-----<br>0.77 | 6.5 | 1 | ✓ | ✓ | ✓ | ✓ | ✓ |
| **ETD057** | 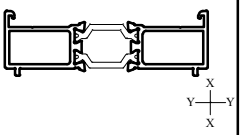 | A28 | 250.8 | 217 | 16.30<br>-----<br>4.66 | 1.12<br>-----<br>1.07 | 6.5 | 1 | ✓ | ✓ | ✓ | ✓ | ✓ |
| **ETD058** | 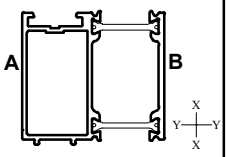 | A28 | 294 | 85 | 9.92<br>-----<br>4.22 | 7.25<br>-----<br>3.4 | 6.5 | 1 | ✓ | ✓ | ✓ | ✓ | ✓ |
| **EUD03** | 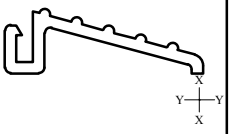 | A33 | 113 | 39 | -<br>-----<br>- | -<br>-----<br>- | 4 | 1 | ✓ | ✓ | | | |
| **PCX41** | <br>PVC | A27 | 65 | - | -<br>-----<br>- | -<br>-----<br>- | 6.5 | 1 | ✓ | | | | |
| **PCX49** | 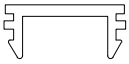 <br>PVC | A24 | 83 | - | -<br>-----<br>- | -<br>-----<br>- | 6.5 | 1 | ✓ | | | | |
| **PCX50** | 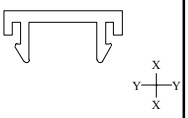 | A24 | 84 | - | -<br>-----<br>- | -<br>-----<br>- | 6.5 | 1 | ✓ | | | | |
| **SPD750** | 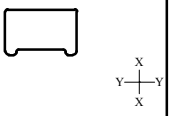 | A27 | 31 | 10 | -<br>-----<br>- | -<br>-----<br>- | 6.5 | 1 | ✓ | ✓ | ✓ | ✓ | |
| **UN3000** | 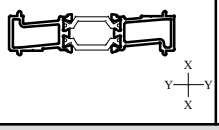 | A32 | 200 | 43.24 | 15.8<br>-----<br>4.51 | 0.79<br>-----<br>0.84 | 6.5 | 1 | ✓ | ✓ | ✓ | ✓ | ✓ |

A = Outside
B = Inside

MF = Mill Finish
SA = Silver Anodised
KL = Basic Colour
HP = Special Colour
M = Dual Colour



ISSUED: MAY 2021

Primary Visible Side - - - - - - - - - - - - - - - - Secondary Visible Side — · — · — · — · — · — · —

## W20015

### Outer Frame

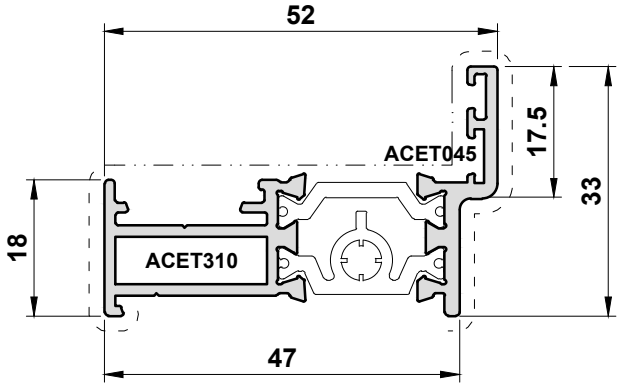


## W20016

### Odd Leg Outer Frame

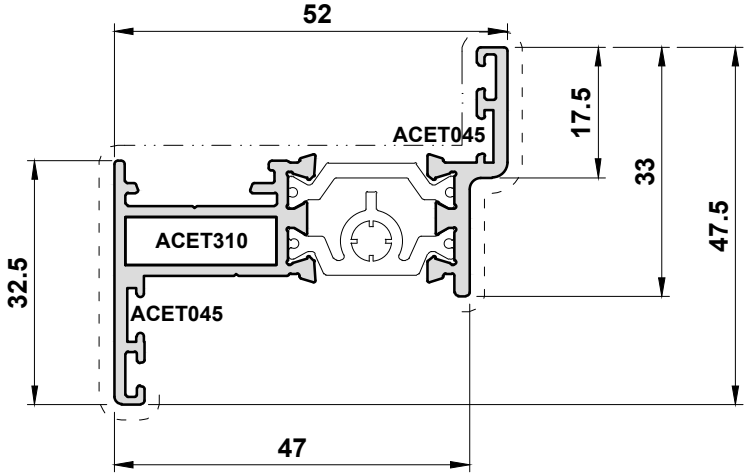


## W20017

### 70mm Outer Frame

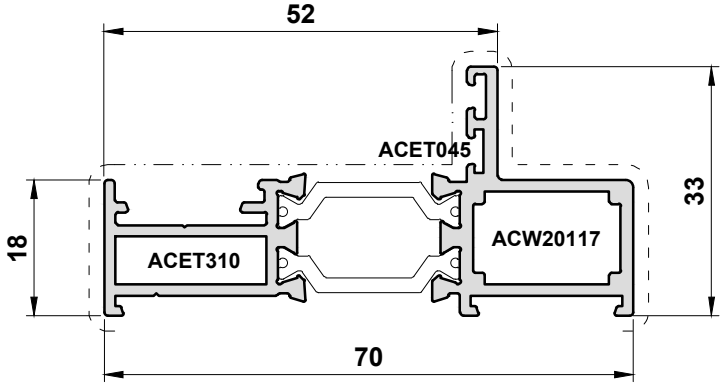


Scale 1:1

Primary Visible Side - - - - - - - - - - - - - - - - - - Secondary Visible Side — · — · — · — · — · — · —

## W20111
### 47mm Long Leg
### Outer Frame

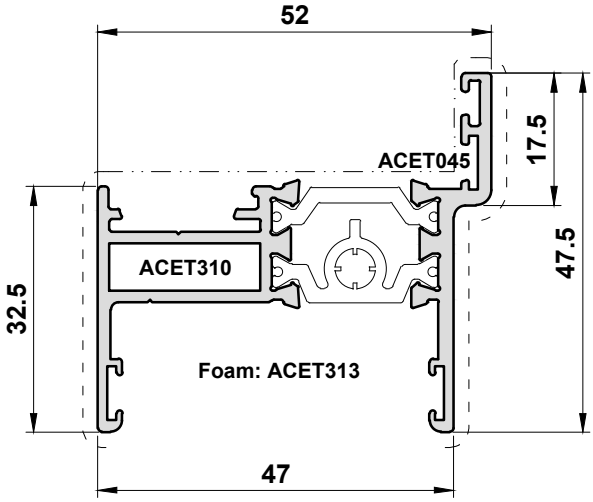


## W20112
### 70mm Long Leg
### Outer Frame

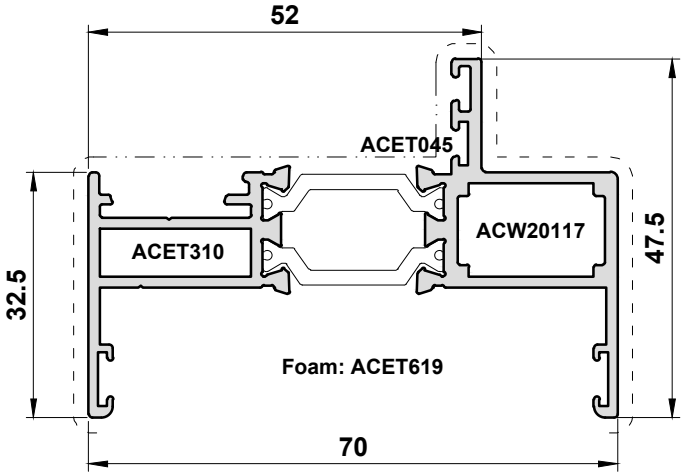


Scale 1:1

Primary Visible Side - - - - - - - - - - - - - - - - - -  Secondary Visible Side — · — · — · — · — · — · —

## W20027
### Open Out Door Sash

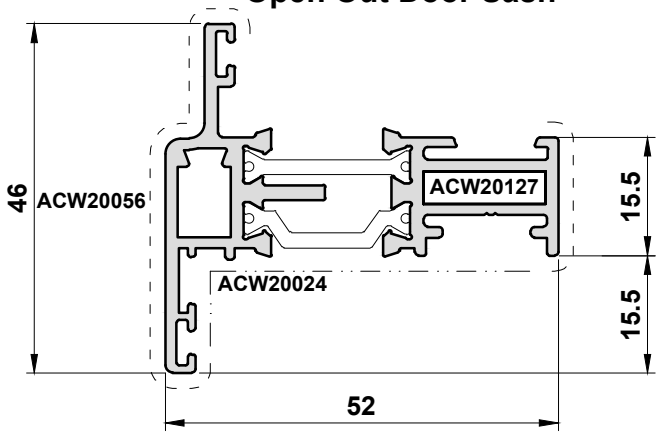


## W20127
### Open Out Door Sash - Tape Glazing

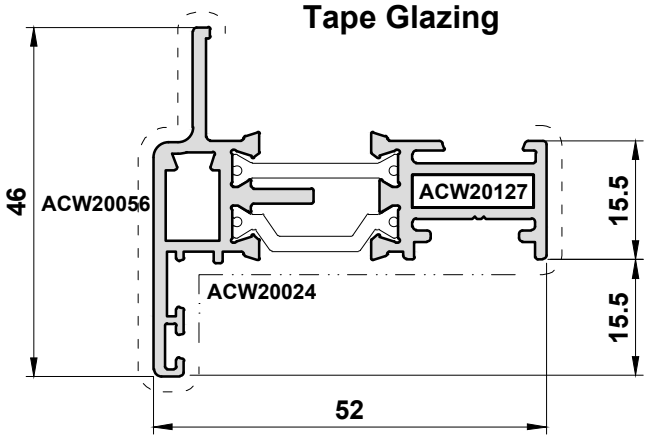


## W20124
### Open Out Door Sash with Eurogroove

Please note only compatible with W20465 only (65mm lock backset)

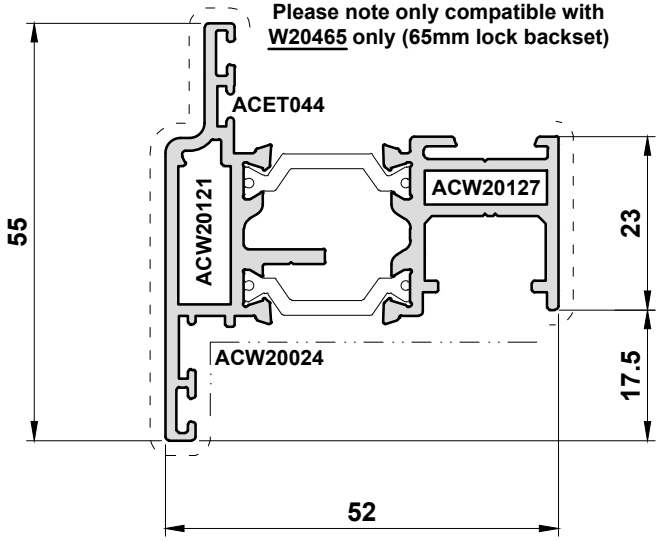


Scale 1:1

Primary Visible Side - - - - - - - - - - - - - - - - - - Secondary Visible Side — · — · — · — · — · — · — · —

## W20125N
### Open In Door Sash

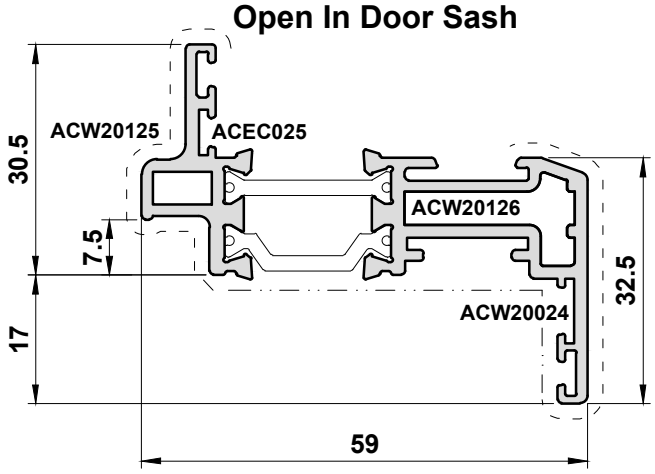


## W20129
### Open In Door Sash with Eurogroove

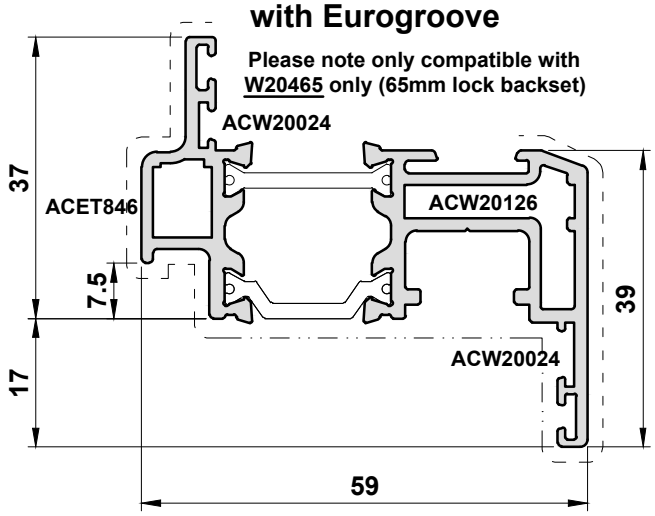


Scale 1:1

Primary Visible Side - - - - - - - - - - - - - - - - - -  Secondary Visible Side — · — · — · — · — · — · — · —

## W20135
### Door Transom

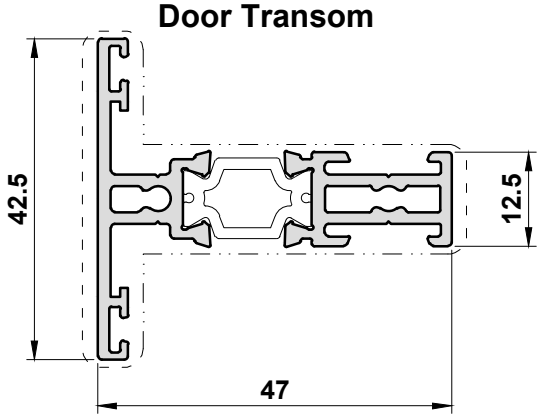


## W20136
### Door Transom with 'V' Grooves

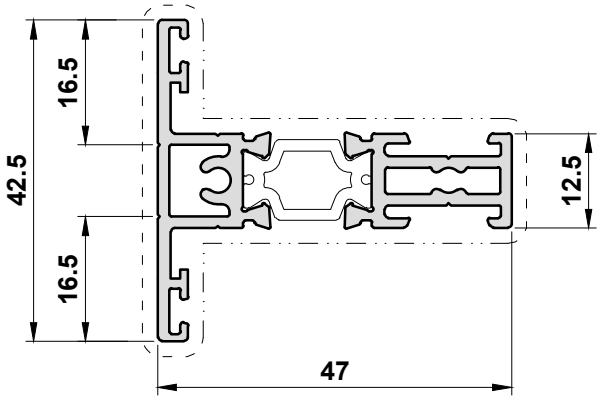


Scale 1:1

Primary Visible Side - - - - - - - - - - - - - - - - - -  Secondary Visible Side — · — · — · — · — · — · — · —

## W20133
### Dummy Transom

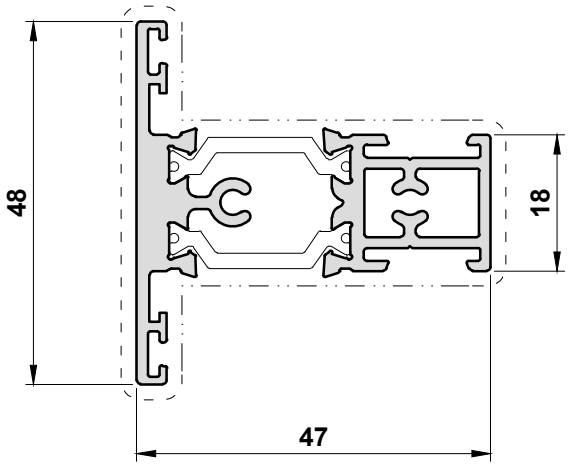


## W20038
### Door Lock Housing

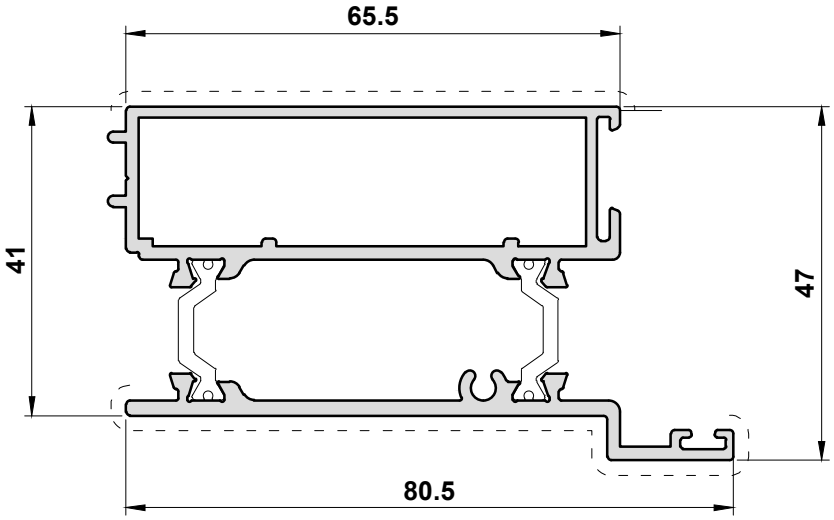


Scale 1:1

Primary Visible Side - - - - - - - - - - - - - - - - - - Secondary Visible Side — · — · — · — · — · — · — · —

## W20138

**Door Lock Housing - Tape Glazing**

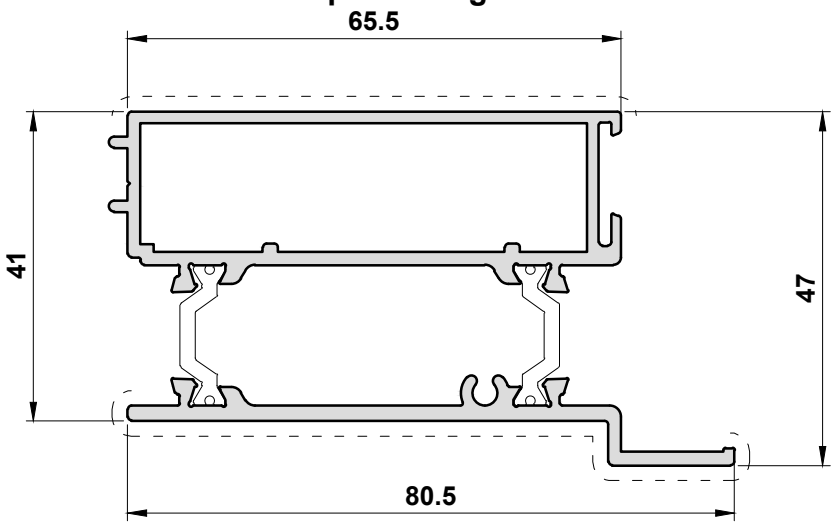


## W20048N

**Open Out Meeting Stile**

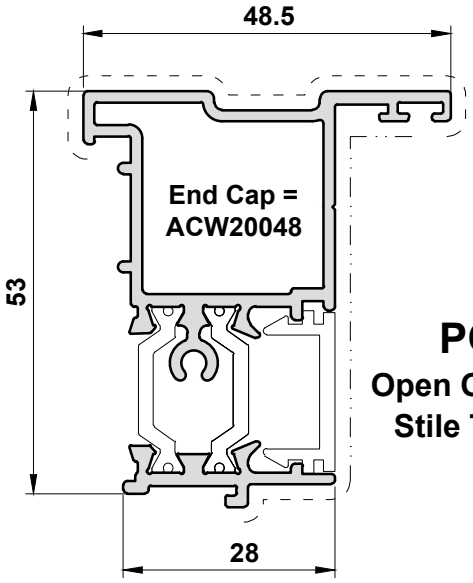


## PCX49

**Open Out Meeting Stile Trim Strip**

## W20046

**Open Out Meeting Stile (W20124)**

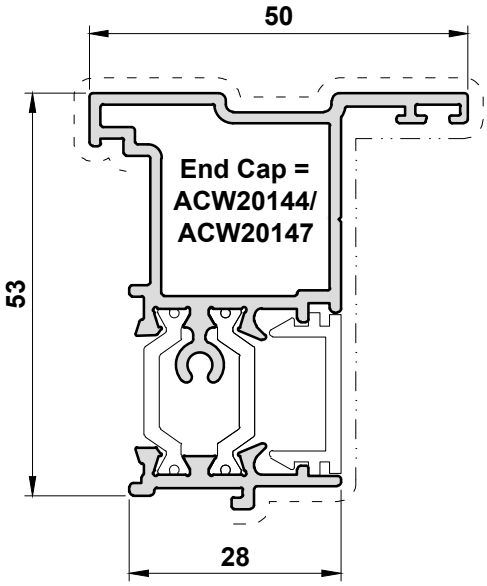


Scale 1:1

Primary Visible Side - - - - - - - - - - Secondary Visible Side — · — · — · —

## W20148
Open In Meeting Stile

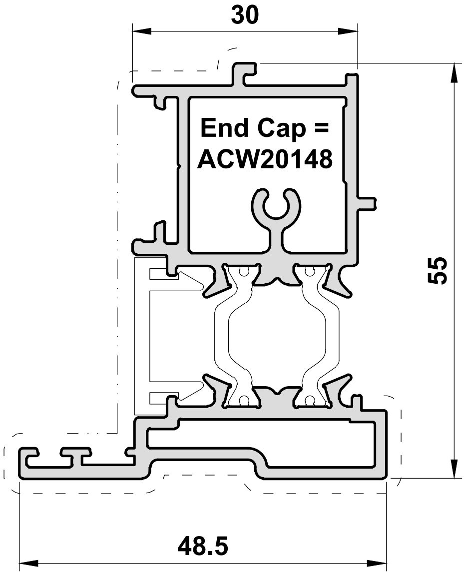


## W20149
Open In Meeting Stile (W20129)

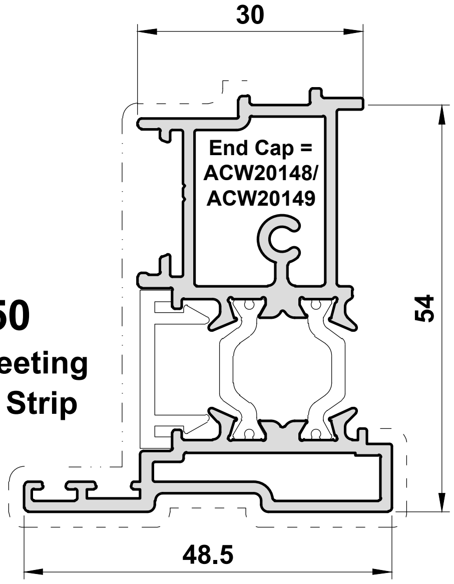


## PCX50
Open In Meeting Stile Trim Strip

## W20039
Wide Transom with Drip

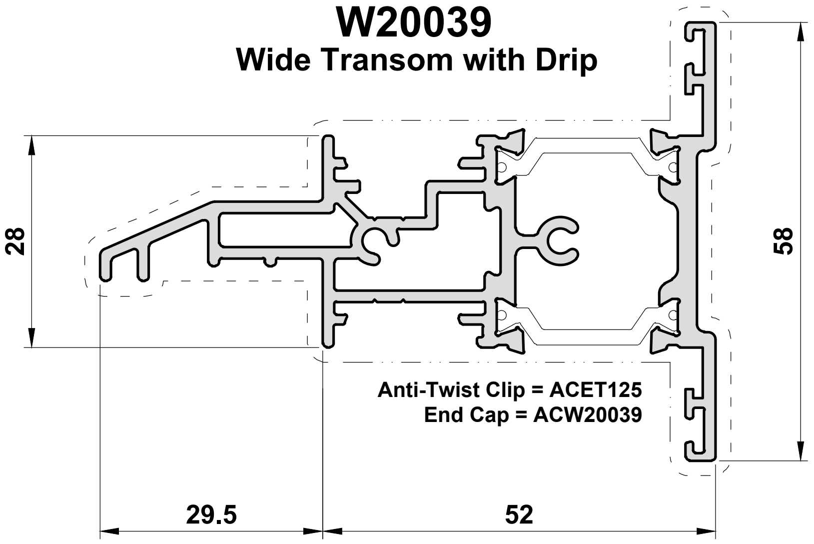


## ETC572
Weather Drip

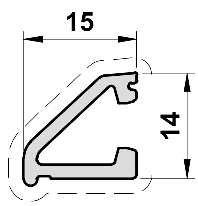


End Caps: ACET572
Rivets: ACVL061

Scale 1:1



ISSUED: MAY 2021

Primary Visible Side — — — — — — — — — — — — — — — — Secondary Visible Side — · — · — · — · — · — · — · —

## W20051
### Coupler / Mullion

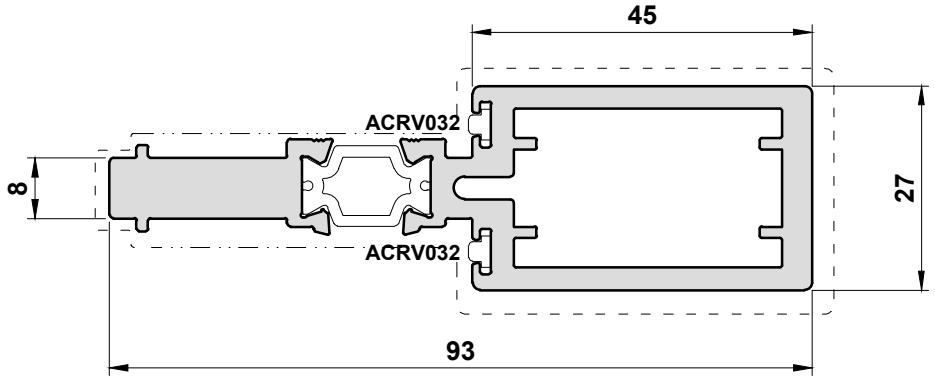


## W20054
### Coupler / Mullion

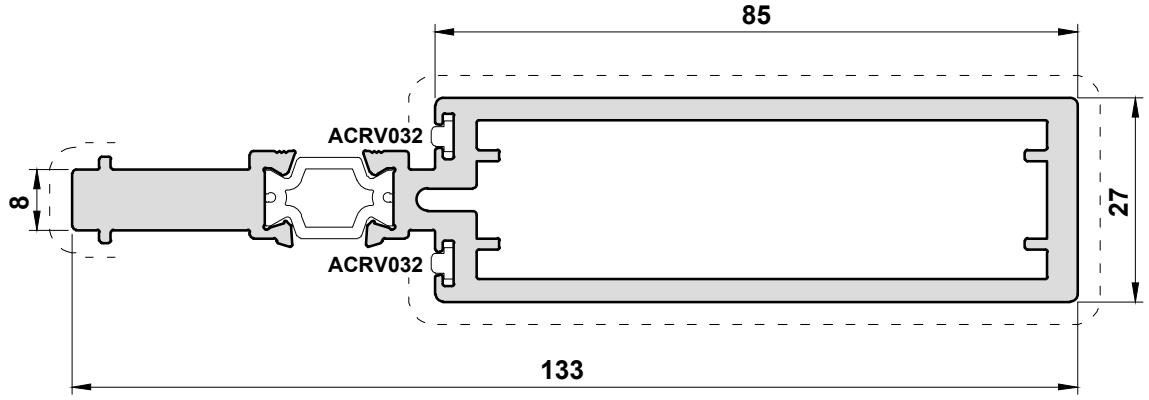


## W20065
### Bay Pole Adaptor

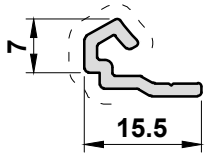


## W20066
### Bay Pole Adaptor

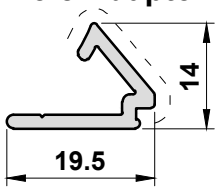


## W20069
### W20015 Bay Pole

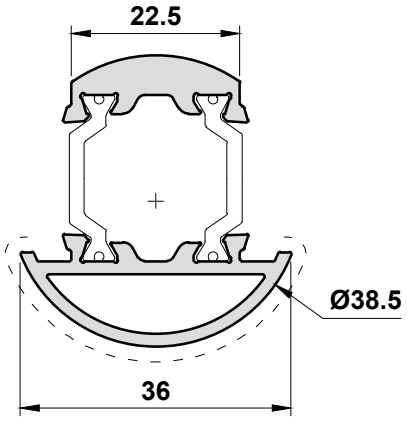


Scale 1:1

Primary Visible Side - - - - - - - - - - - - - - - - - -  Secondary Visible Side — · — · — · — · — · — · — · —

## ETC047

**47mm 90° Corner Post**

**W20015, W20110 & W20111 only**

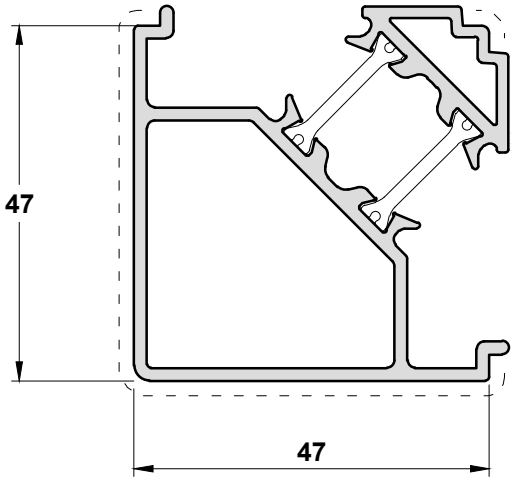


## ETC048

**70mm 90° Corner Post**

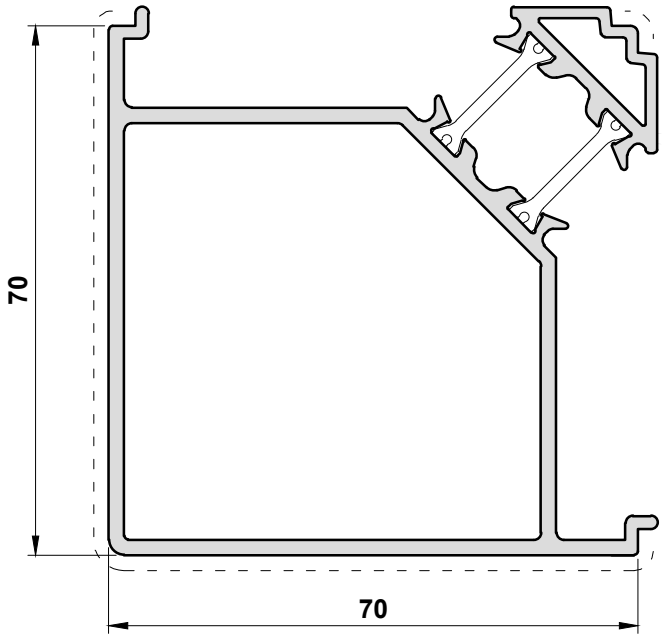


Scale 1:1

Primary Visible Side - - - - - - - - - - - - - - - - - -  Secondary Visible Side — · — · — · — · — · — · — · —

## W20165
### 25mm Astragal Bar

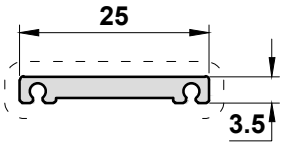


## W20166
### 41mm Astragal Bar

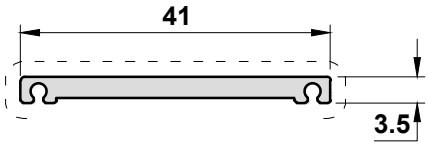


## W20175
### Threshold Infill

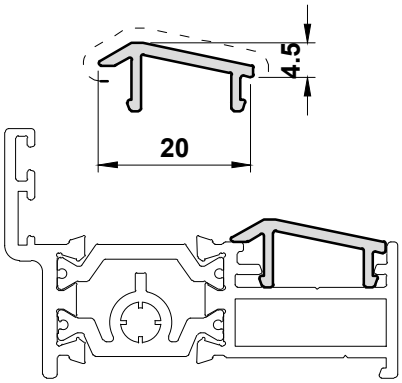


## PCX41
### Outer Frame Infill

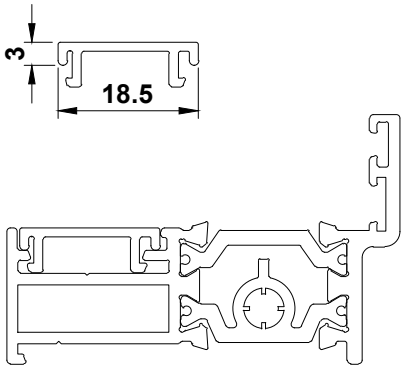


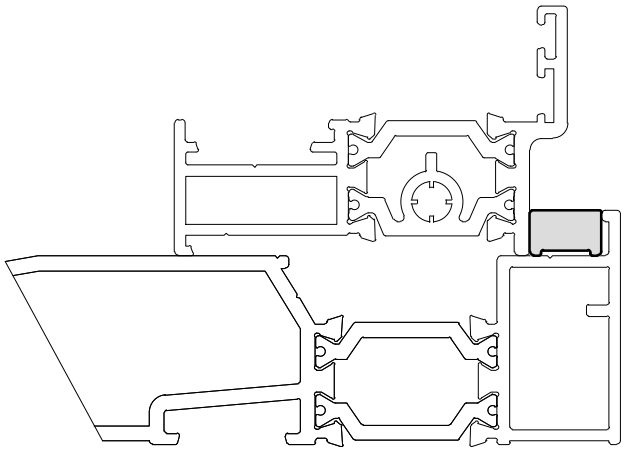

## SPD750
### Cill Infill

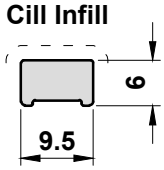


Scale 1:1

Primary Visible Side - - - - - - - - - - - - - - - - - -  Secondary Visible Side — · — · — · — · — · — · —

## ETD056
**20mm Add On For 47mm sections**

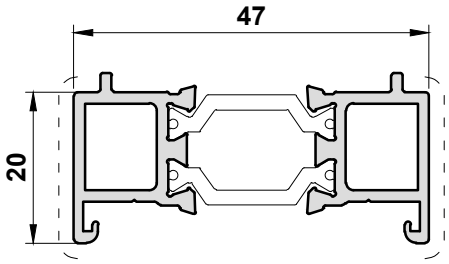


## ETD057
**20mm Add On For W20017**

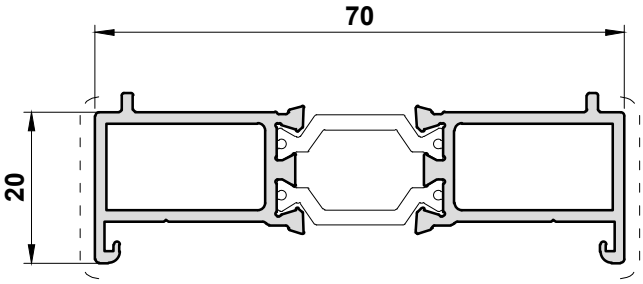


## DV515
**42mm Head Extension**

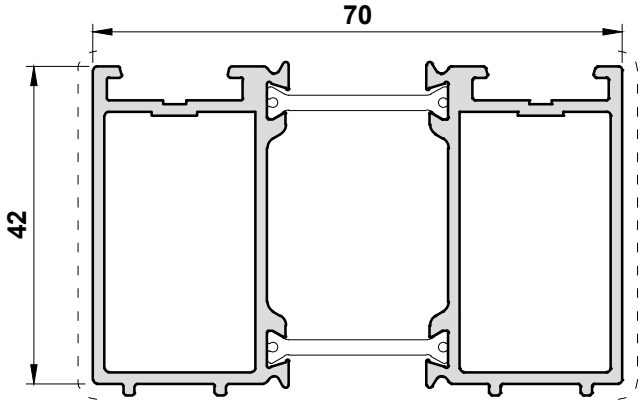


## ETD058
**42mm Head Extension**

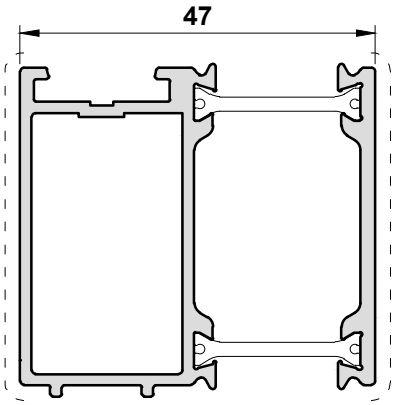


Scale 1:1

Primary Visible Side - - - - - - - - - - - - - - - - - -  Secondary Visible Side — · — · — · — · — · — · — · —

## W20168N
### Internal Square Bead

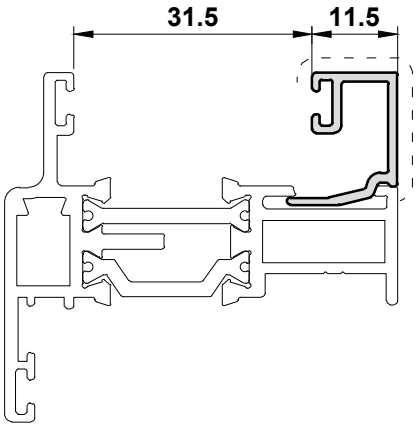


## W20170N
### Internal Square Bead

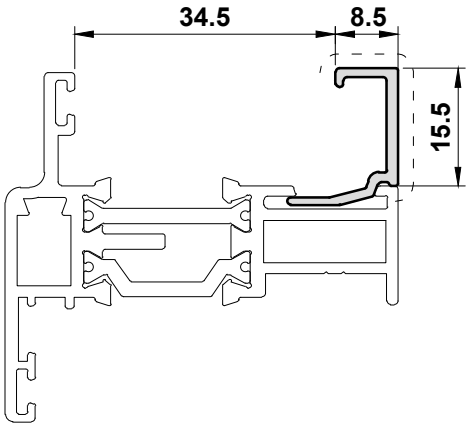


## W20171N
### Internal Square Bead

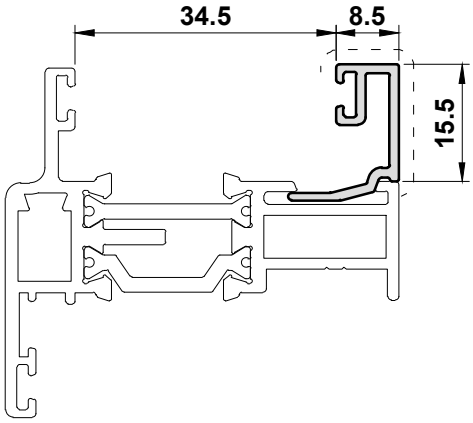


## W20173
### Internal Square Bead

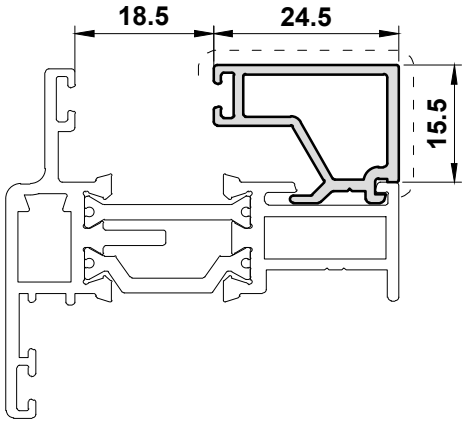


## W20172
### External Sloped Bead

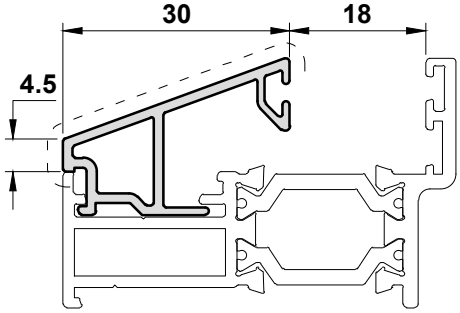


Scale 1:1

Primary Visible Side - - - - - - - - - - - - - - - - - -  Secondary Visible Side — · — · — · — · — · — · — · —

## ETC364
### 24mm Chamfered Bead

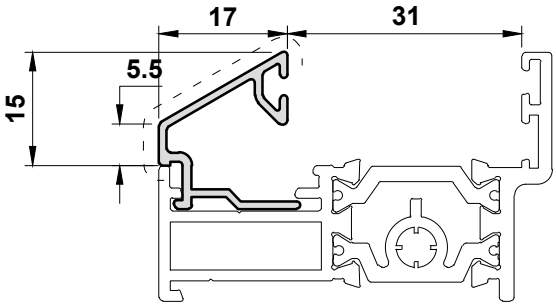


## ETC375
### 28mm Chamfered Bead

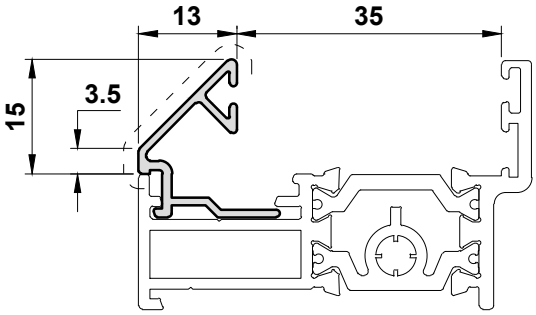


## ETC370
### 24mm Square Bead

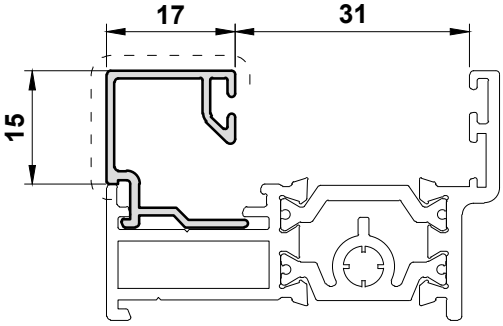


## ETC379
### 32mm Chamfered Bead

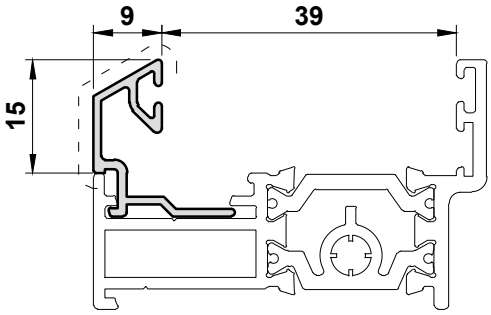


## ETC371
### 28mm Square Bead

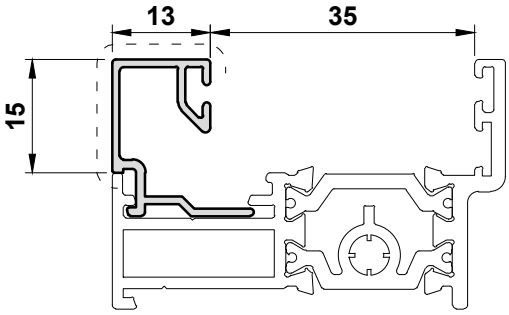


## ETC376
### 36mm Square Bead

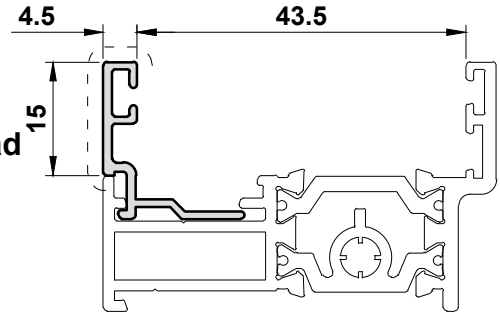


Scale 1:1

Primary Visible Side - - - - - - - - - - - - - - - - Secondary Visible Side — · — · — · — · — · — · —

## W20485
### Horizontal Coupler with Drip Bar

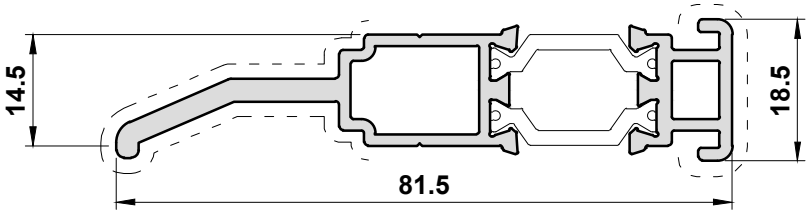


## W20486
### 45mm Box Horizontal Coupler With Drip

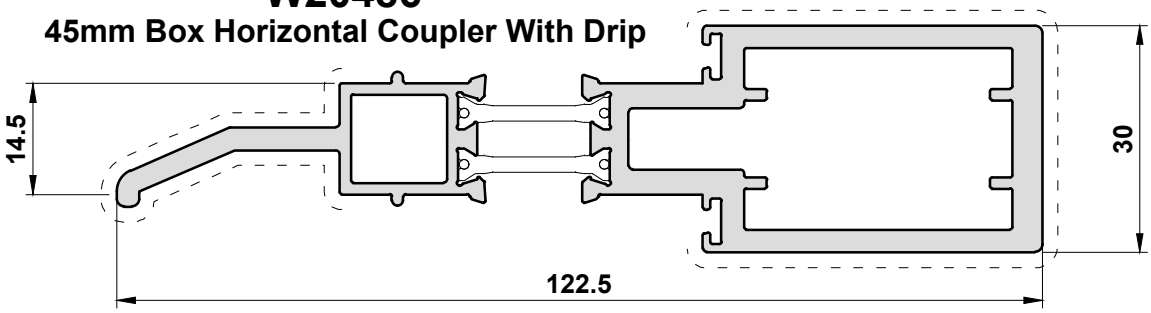


## W20487
### 45mm Box Vertical Coupler

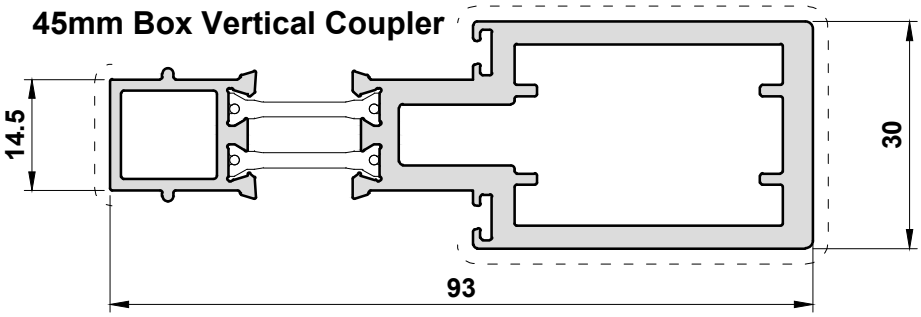


## W20488
### Horizontal Coupler With Drip Bar

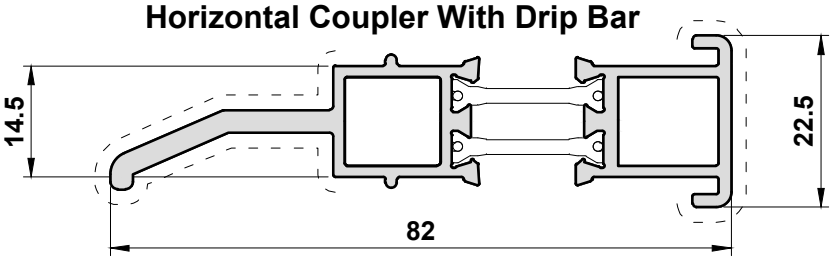


## W20489
### Vertical Coupler

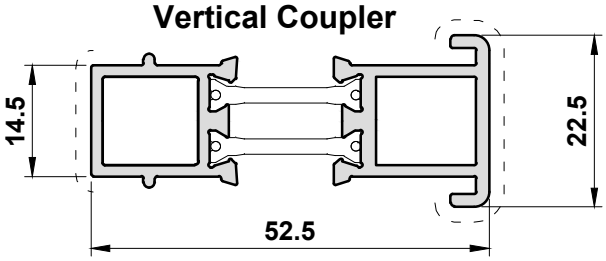


Scale 1:1

Primary Visible Side - - - - - - - - - - - - - - - - Secondary Visible Side — · — · — · — · — · — · — · —

## W20490
### Coupler

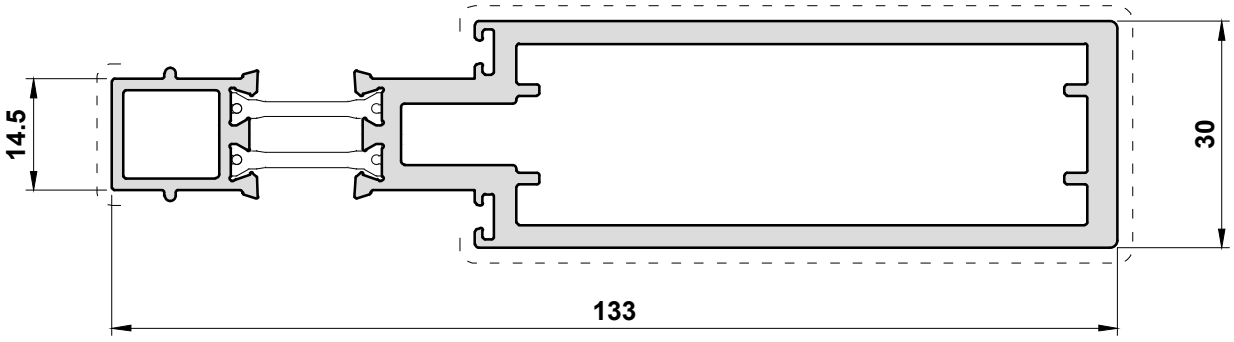


## ETC853
### Coupler

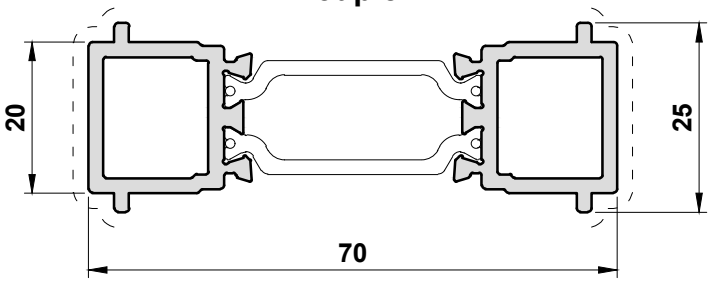


## UN3000
### Horizontal Coupler

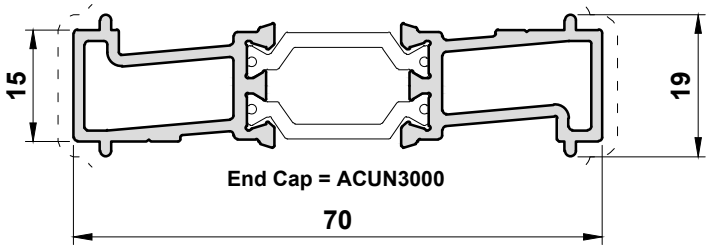


## W20492
### 47mm Horizontal Coupler

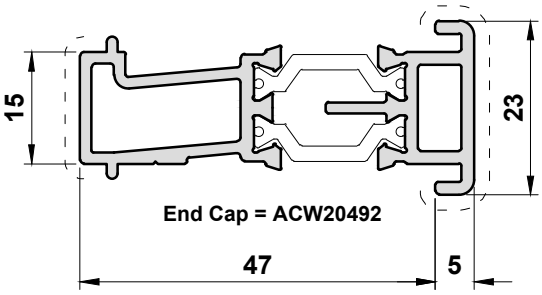


Scale 1:1

Primary Visible Side - - - - - - - - - - - - - - - - - -  Secondary Visible Side — · · — · · — · · — · · — · · — · · —

## W20270
### Low Threshold
(W20015 Only)

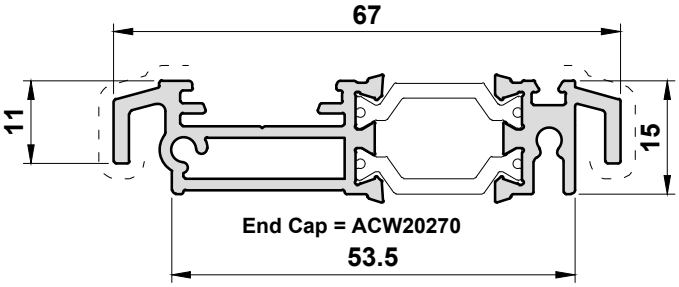


## W20272
### Open Out Low Threshold Adaptor for W20124/126

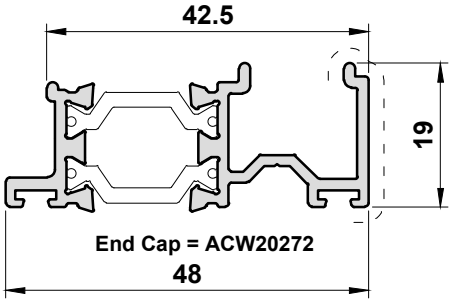


## W20274
### Open In Low Threshold Adaptor for W20129

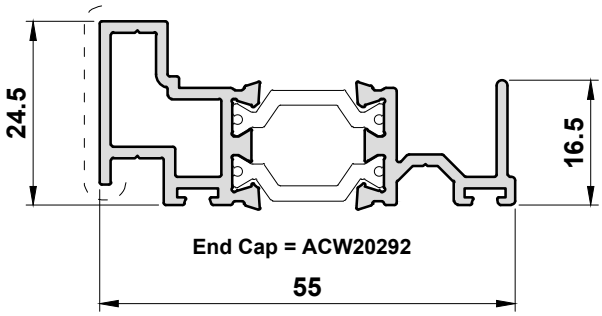


## EUD03
### Door Ramp

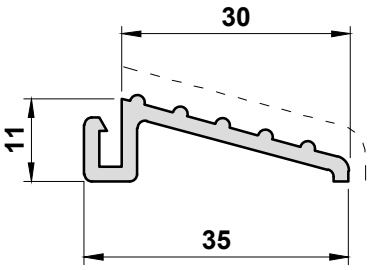


Scale 1:1

# Alitherm Heritage Door

**PROFILE : SCALED PROFILE DRAWINGS**

Primary Visible Side - - - - - - - - - - - - - - - - - -  Secondary Visible Side — · — · — · — · — · — · —

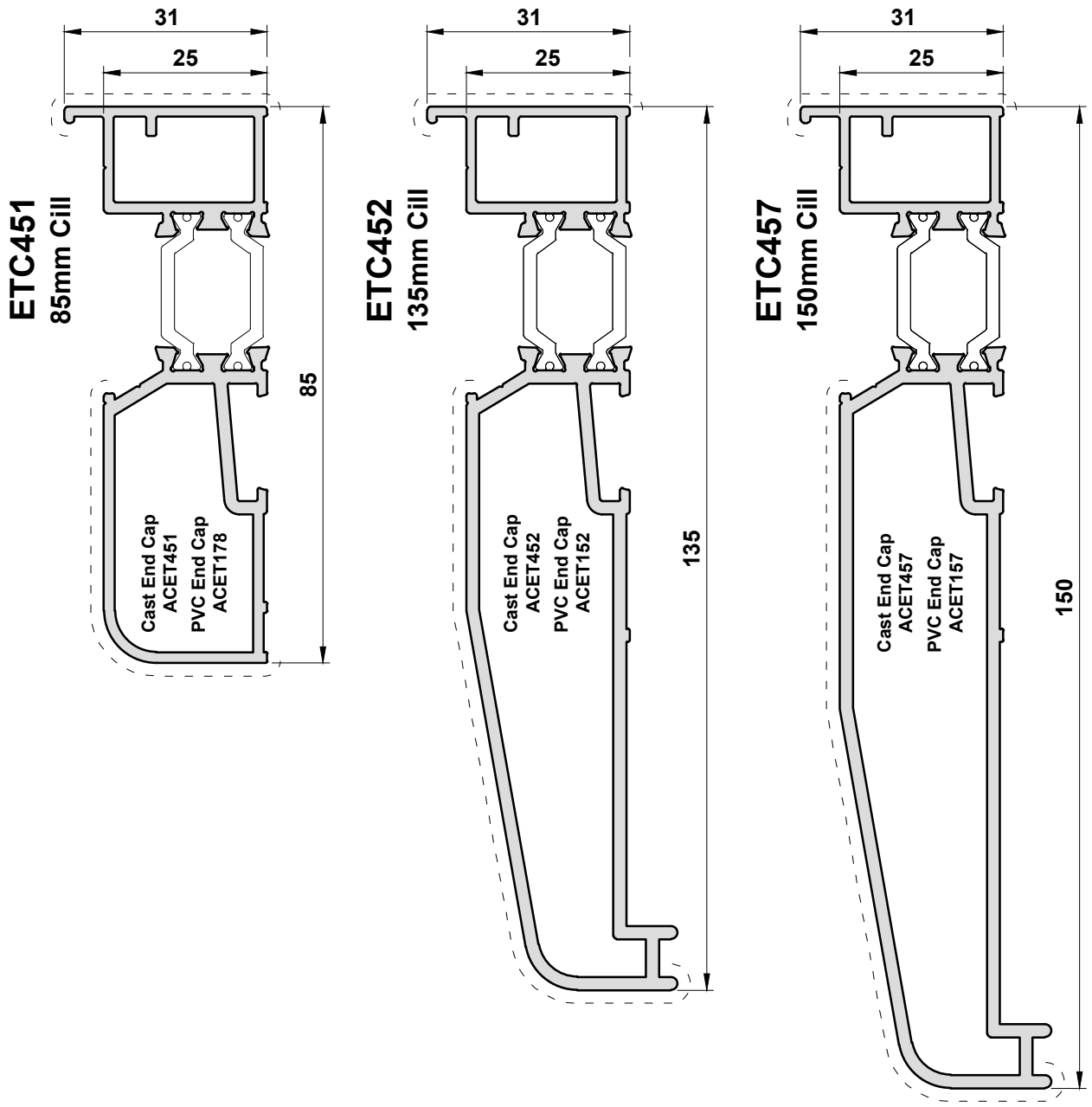


Scale 1:1



ISSUED: MAY 2021

# Alitherm Heritage Door

**PROFILE : SCALED PROFILE DRAWINGS**

Primary Visible Side - - - - - - - - - - - - - - - - - -  Secondary Visible Side — · — · — · — · — · — · —

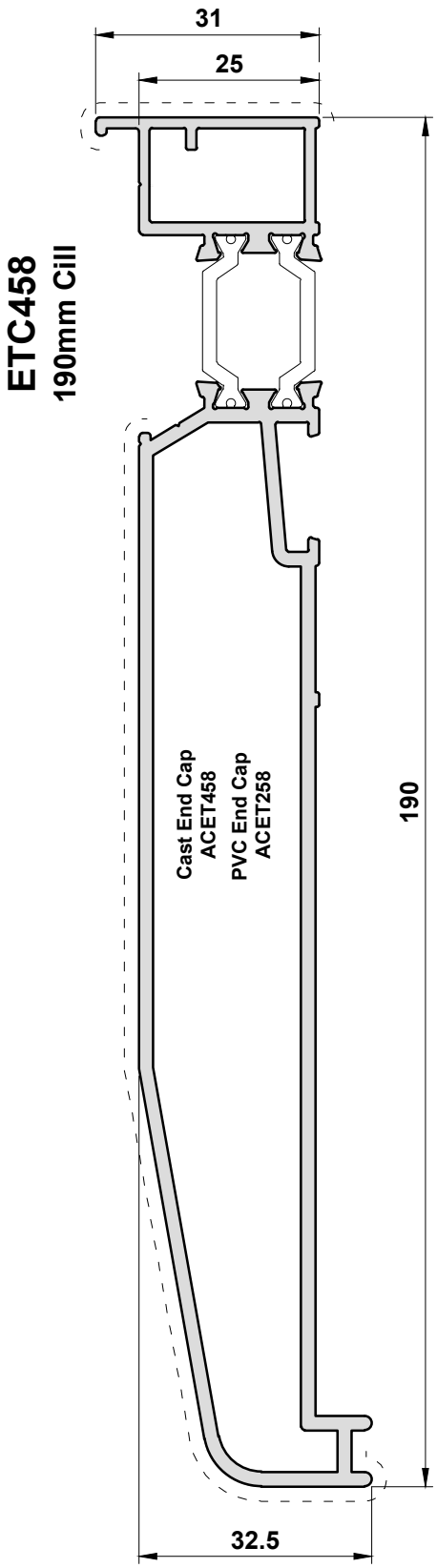


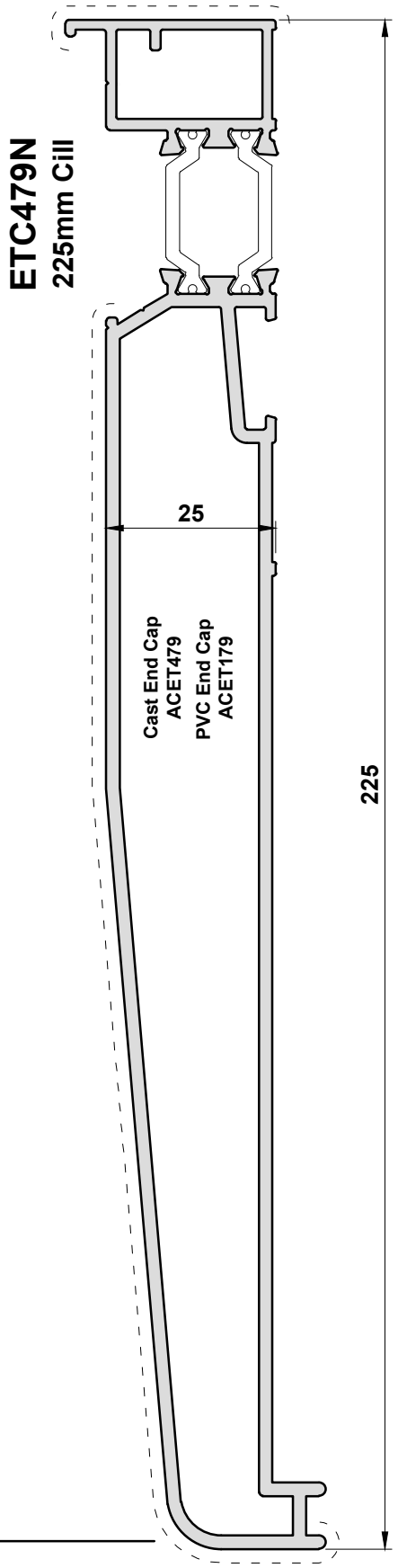


Scale 1:1

Primary Visible Side - - - - - - - - - - - - - - - - - -  Secondary Visible Side — · · — · · — · · — · · — · · — · · — · · —

## ETC081
**169° - 150°**
**Bay Pole Adaptor**

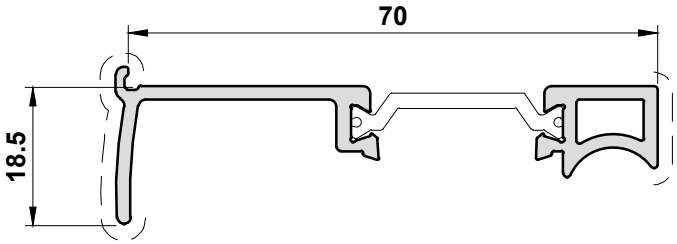


## ETC080
**Bay Pole**

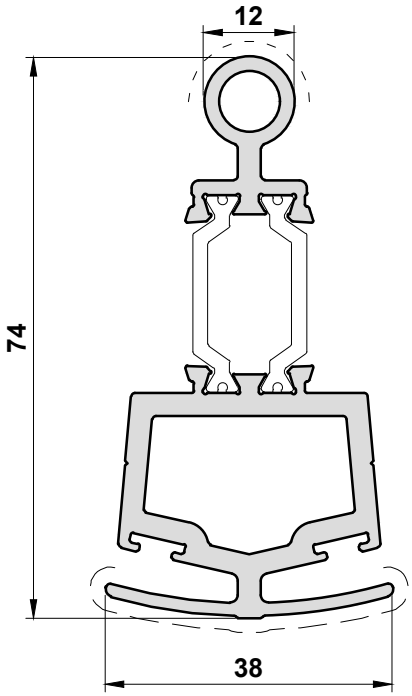


## ETC082
**149° - 130°**
**Bay Pole Adaptor**

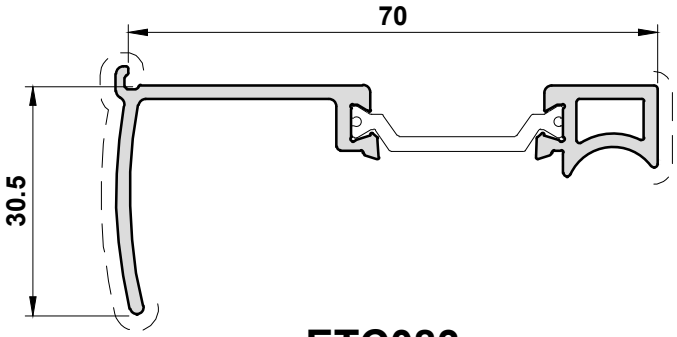


## ETC083
**129° - 115°**
**Bay Pole Adaptor**

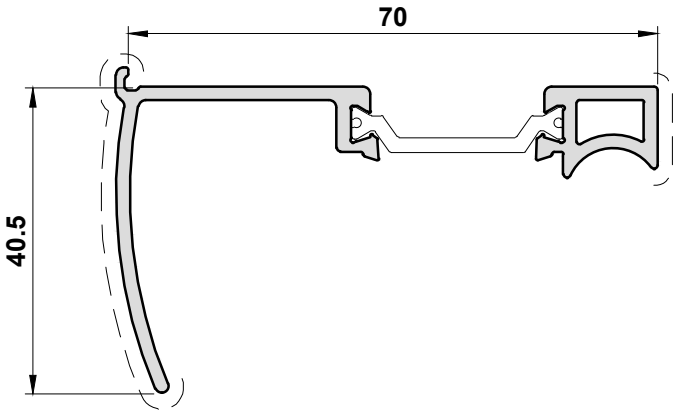


Scale 1:1

# Section B

## Accessories

## Photos & Drawings

# Alitherm Heritage Door

## ACCESSORIES : PHOTOS & DRAWINGS

| Image | Part Code | Pack | Unit | Application | Colour | |
|---|---|---|---|---|---|---|
| | **ACCY3045NKS1**<br><br>**30/45 High Security Cylinder 3 keys supplied (cylinder can be reversed)**<br><br>**Nickle Finish** | **1** | **Each** | **ACW20465**<br>**ACW20466** | MF<br>SA<br>KL<br>HP<br>SSC<br>SMC<br>W<br>Z<br>PC | ✓ |
| 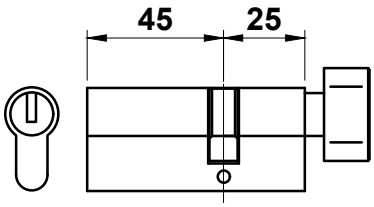 | **ACCY4525NKTTS3**<br><br>**45/25 High Security Cylinder**<br>**3 keys supplied**<br>**ACCY4525NKTTS3-SL for keyed alike**<br>**ACCY4525NKTTS3-SLPR for keyed alike pair**<br><br>**Nickle Finish** | **1** | **Each** | **ACW20065**<br>**ACW20465**<br>**ACW20466** | MF<br>SA<br>KL<br>HP<br>SSC<br>SMC<br>W<br>Z<br>PC | ✓ |
| | **ACDV737**<br><br>**Bottom Shoot Bolt** | **1** | **Each** | **ACW20465**<br>**ACW20466** | MF<br>SA<br>KL<br>HP<br>SSC<br>SMC<br>W<br>Z<br>PC | ✓ |
| | **ACDV738**<br><br>**Top Shoot Bolt** | **1** | **Each** | **ACW20465**<br>**ACW20466** | MF<br>SA<br>KL<br>HP<br>SSC<br>SMC<br>W<br>Z<br>PC | ✓ |
| | **ACDV742**<br><br>**200mm Extension for ACDV738** | **1** | **Each** | **ACW20465**<br>**ACW20466** | MF<br>SA<br>KL<br>HP<br>SSC<br>SMC<br>W<br>Z<br>PC | ✓ |

T-BARS
ACVG65=2.5mm
ACVG66=3.0mm
ACVL150=4.0mm

Screw (Grub)

**MF = Mill Finish**
**SA = Silver Anodised**
**KL = Basic Colour**
**HP = Special Colour**
**SSC = Smooth Satin Chrome**
**SMC = Smokey Chrome**
**PC = Polished Chrome**
**W = White**
**Z = Black**

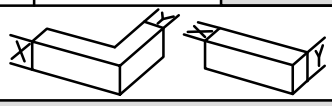

| Image | Part Code | Pack | Unit | Application | Colour |
|---|---|---|---|---|---|
| | **ACDV744**<br>400mm Extension for ACDV738 | 1 | Each | ACW20465<br>ACW20466 | MF ✓<br>SA<br>KL<br>HP<br>SSC<br>SMC<br>W<br>Z<br>PC |
| | **ACDV746**<br>600mm Extension for ACDV738 | 1 | Each | ACW20465<br>ACW20466 | MF ✓<br>SA<br>KL<br>HP<br>SSC<br>SMC<br>W<br>Z<br>PC |
| 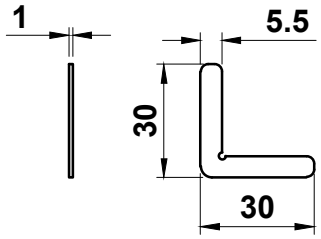  | **ACEC025**<br>Stainless Steel Chevron | 100 | pack | W20125N | MF ✓<br>SA<br>KL<br>HP<br>SSC<br>SMC<br>W<br>Z<br>PC |
| 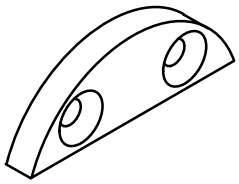 | **ACET041**<br>Cill Nose Bracket | 1 | each | ETC451<br>ETC452<br>ETC457<br>ETC458<br>ETC479 | MF ✓<br>SA<br>KL<br>HP<br>SSC<br>SMC<br>W<br>Z<br>PC |
| 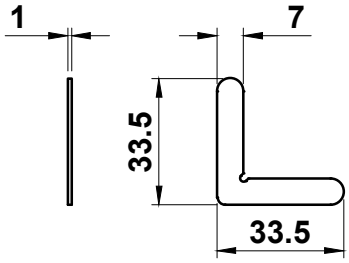  | **ACET045**<br>Stainless Steel Chevron | 100 | pack | W20015<br>W20016<br>W20125N | MF ✓<br>SA<br>KL<br>HP<br>SSC<br>SMC<br>W<br>Z<br>PC |

T-BARS
ACVG65=2.5mm
ACVG66=3.0mm
ACVL150=4.0mm

Screw (Grub)

| | | | |
|---|---|---|---|
| MF | = Mill Finish | W | = White |
| SA | = Silver Anodised | Z | = Black |
| KL | = Basic Colour | | |
| HP | = Special Colour | | |
| SSC | = Smooth Satin Chrome | | |
| SMC | = Smokey Chrome | | |
| PC | = Polished Chrome | | |

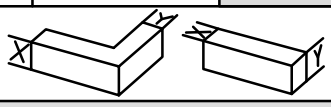

| Image | Part Code | Pack | Unit | Application | Colour |
|---|---|---|---|---|---|
| 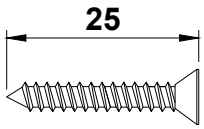  | **ACET060**<br>**No. 7 x 25 S/S Self Tapping CSK Screw** | **100** | **pack** | | MF ✓<br>SA<br>KL<br>HP<br>SSC<br>SMC<br>W<br>Z<br>PC |
| 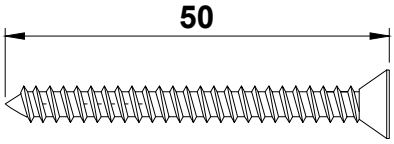  | **ACET062**<br>**No. 10 x 50 S/S Self Tapping CSK Screw** | **100** | **pack** | | MF ✓<br>SA<br>KL<br>HP<br>SSC<br>SMC<br>W<br>Z<br>PC |
| 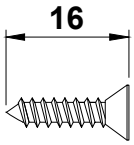  | **ACET064**<br>**No. 8 x 16 S/S Self Tapping CSK Screw** | **100** | **pack** | | MF ✓<br>SA<br>KL<br>HP<br>SSC<br>SMC<br>W<br>Z<br>PC |
| 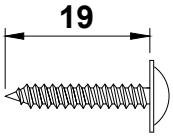  | **ACET099**<br>**No. 8 x 19 S/S Self Tapping Flange Screw** | **100** | **pack** | | MF ✓<br>SA<br>KL<br>HP<br>SSC<br>SMC<br>W<br>Z<br>PC |
| | **ACET125**<br>**Stainless Steel Anti-Twist Clip** | **100** | **pack** | **W20039** | MF ✓<br>SA<br>KL<br>HP<br>SSC<br>SMC<br>W<br>Z<br>PC |

T-BARS
ACVG65=2.5mm
ACVG66=3.0mm
ACVL150=4.0mm

Screw (Grub)

| | | | |
|---|---|---|---|
| **MF** | **= Mill Finish** | **W** | **= White** |
| **SA** | **= Silver Anodised** | **Z** | **= Black** |
| **KL** | **= Basic Colour** | | |
| **HP** | **= Special Colour** | | |
| **SSC** | **= Smooth Satin Chrome** | | |
| **SMC** | **= Smokey Chrome** | | |
| **PC** | **= Polished Chrome** | | |

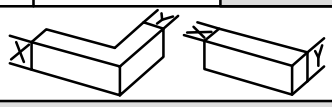

| Image | Part Code | Pack | Unit | Application | Colour | |
|---|---|---|---|---|---|---|
| 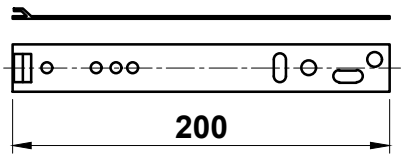  | **ACET130**<br>**Galvanised Steel Fixing Strap**<br>**200mm x 25mm x 1.5mm** | **100** | **pack** | **W20015**<br>**W20016**<br>**W20017** | MF<br>SA<br>KL<br>HP<br>SSC<br>SMC<br>W<br>Z<br>PC | ✓<br><br><br><br><br><br><br><br> |
| 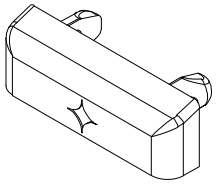 | **ACET131**<br>**Drainage Cap**<br>**for colour match drainage cap - see ACET432** | **100** | **pack** | | MF<br>SA<br>KL<br>HP<br>SSC<br>SMC<br>W<br>Z<br>PC | <br><br><br><br><br><br>✓<br>✓<br> |
| 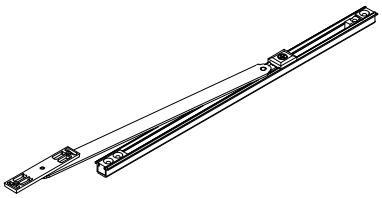 | **ACET149**<br>**90° Slimline Restrictor** | **1** | **each** | **W20015**<br>**W20016**<br>**W20017**<br>**W20111**<br>**W20112**<br>**W20124**<br>**W20129** | MF<br>SA<br>KL<br>HP<br>SSC<br>SMC<br>W<br>Z<br>PC | ✓<br><br><br><br><br><br><br><br> |
| 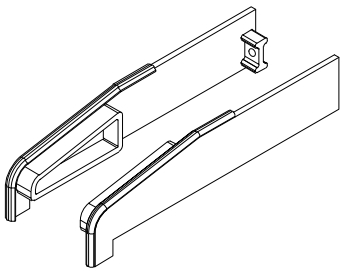 | **ACET152**<br>**PVC Cill End Caps** | **10** | **pair** | **ETC452** | MF<br>SA<br>KL<br>HP<br>SSC<br>SMC<br>W<br>Z<br>PC | <br><br><br><br><br><br>✓<br>✓<br> |
| 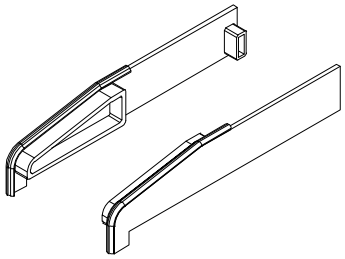 | **ACET157**<br>**PVC Cill End Caps** | **10** | **pair** | **ETC457** | MF<br>SA<br>KL<br>HP<br>SSC<br>SMC<br>W<br>Z<br>PC | <br><br><br><br><br><br>✓<br>✓<br> |

T-BARS
ACVG65=2.5mm
ACVG66=3.0mm
ACVL150=4.0mm

Screw (Grub)

| | | | |
|---|---|---|---|
| **MF** | **= Mill Finish** | **W** | **= White** |
| **SA** | **= Silver Anodised** | **Z** | **= Black** |
| **KL** | **= Basic Colour** | | |
| **HP** | **= Special Colour** | | |
| **SSC** | **= Smooth Satin Chrome** | | |
| **SMC** | **= Smokey Chrome** | | |
| **PC** | **= Polished Chrome** | | |

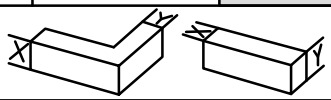

| Image | Part Code | Pack | Unit | Application | Colour | |
|---|---|---|---|---|---|---|
| 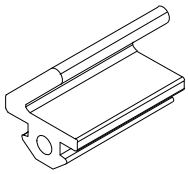 | **ACET160R**<br>**EPDM Flipper Gasket** | **100** | **m** | **W20015**<br>**W20027**<br>**W20127** | MF<br>SA<br>KL<br>HP<br>SSC<br>SMC<br>W<br>Z<br>PC | <br><br><br><br><br><br><br>✓<br> |
| 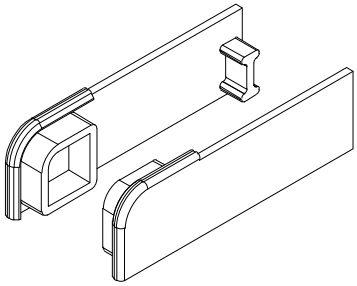 | **ACET178**<br>**PVC Cill End Caps** | **10** | **pair** | **ETC451** | MF<br>SA<br>KL<br>HP<br>SSC<br>SMC<br>W<br>Z<br>PC | <br><br><br><br><br><br>✓<br>✓<br> |
| 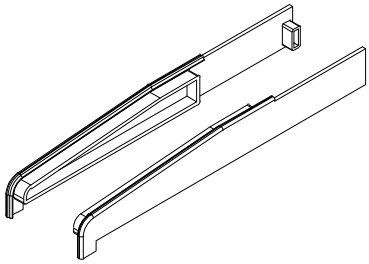 | **ACET179**<br>**PVC Cill End Caps** | **10** | **pair** | **ETC479** | MF<br>SA<br>KL<br>HP<br>SSC<br>SMC<br>W<br>Z<br>PC | <br><br><br><br><br><br>✓<br>✓<br> |
| 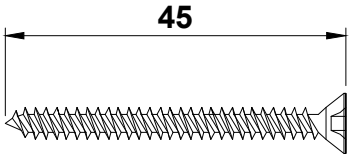 | **ACET190**<br>**4.3 x 45mm CSK Polyamide Screw** | **1000** | **Pack** | **W20048**<br>**W20025**<br>**W20027** | MF<br>SA<br>KL<br>HP<br>SSC<br>SMC<br>W<br>Z<br>PC | <br><br><br><br><br><br><br>✓<br> |
| 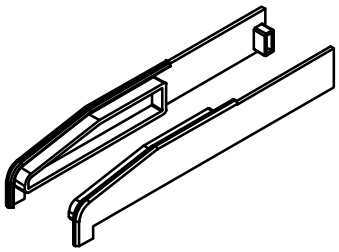 | **ACET258**<br>**PVC Cill End Cap** | **10** | **pair** | **ETC458** | MF<br>SA<br>KL<br>HP<br>SSC<br>SMC<br>W<br>Z<br>PC | <br><br><br><br><br><br>✓<br>✓<br> |

T-BARS
ACVG65=2.5mm
ACVG66=3.0mm
ACVL150=4.0mm

Screw (Grub)

**MF = Mill Finish**
**SA = Silver Anodised**
**KL = Basic Colour**
**HP = Special Colour**
**SSC = Smooth Satin Chrome**
**SMC = Smokey Chrome**
**PC = Polished Chrome**
**W = White**
**Z = Black**

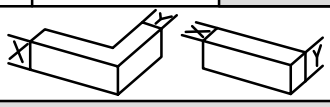

| Image | Part Code | Pack | Unit | Application | Colour | |
|---|---|---|---|---|---|---|
| 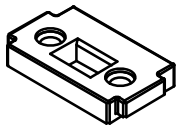 | **ACET269**<br>Door Keep | 10 | pair | ACUN3537<br>ACW20382<br>W20015 | MF | ✓ |
| | | | | | SA | |
| | | | | | KL | |
| | | | | | HP | |
| | | | | | SSC | |
| | | | | | SMC | |
| | | | | | W | |
| | | | | | Z | |
| | | | | | PC | |
| 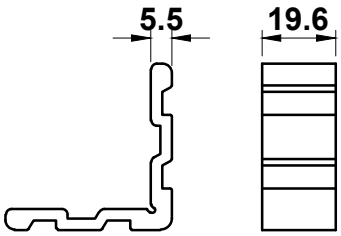  | **ACET310**<br>Corner Cleat | 24 | pack | W20015<br>W20016<br>W20017<br>W20111<br>W20112 | MF | ✓ |
| | | | | | SA | |
| | | | | | KL | |
| | | | | | HP | |
| | | | | | SSC | |
| | | | | | SMC | |
| | | | | | W | |
| | | | | | Z | |
| | | | | | PC | |
| 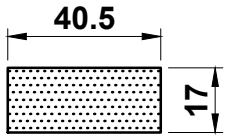  | **ACET313**<br>Foam Infill<br>1250mm Lengths | 1 | each | W20111 | MF | ✓ |
| | | | | | SA | |
| | | | | | KL | |
| | | | | | HP | |
| | | | | | SSC | |
| | | | | | SMC | |
| | | | | | W | |
| | | | | | Z | |
| | | | | | PC | |
| 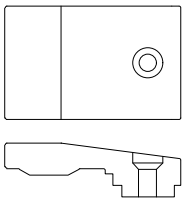 | **ACET380**<br>Run Up Block | 100 | pack | W20015<br>W20016<br>W20017<br>W20111<br>W20112 | MF | |
| | | | | | SA | |
| | | | | | KL | |
| | | | | | HP | |
| | | | | | SSC | |
| | | | | | SMC | |
| | | | | | W | ✓ |
| | | | | | Z | ✓ |
| | | | | | PC | |
| 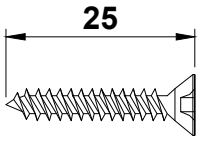  | **ACET390**<br>4.3 x 25mm CSK Polyamide Screw | 200 | Pack | ACW20067<br>W20015<br>W20016<br>W20017<br>W20111<br>W20112 | MF | |
| | | | | | SA | |
| | | | | | KL | |
| | | | | | HP | |
| | | | | | SSC | |
| | | | | | SMC | |
| | | | | | W | ✓ |
| | | | | | Z | |
| | | | | | PC | |

T-BARS
ACVG65=2.5mm
ACVG66=3.0mm
ACVL150=4.0mm

Screw (Grub)

| | | | |
|---|---|---|---|
| MF | = Mill Finish | W | = White |
| SA | = Silver Anodised | Z | = Black |
| KL | = Basic Colour | | |
| HP | = Special Colour | | |
| SSC | = Smooth Satin Chrome | | |
| SMC | = Smokey Chrome | | |
| PC | = Polished Chrome | | |

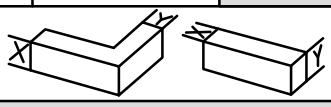

| Image | Part Code | Pack | Unit | Application | Colour | |
|---|---|---|---|---|---|---|
| 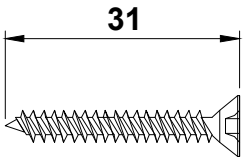  | **ACET392**<br>**4.3 x 31mm CSK Polyamide Screw** | **100** | **pack** | **W20129**<br>**W20149** | MF | ✓ |
| | | | | | SA | |
| | | | | | KL | |
| | | | | | HP | |
| | | | | | SSC | |
| | | | | | SMC | |
| | | | | | W | |
| | | | | | Z | |
| | | | | | PC | |
| 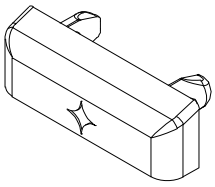 | **ACET432**<br>**Colour Match Drainage Cover Cap** | **8** | **pack** | | MF | |
| | | | | | SA | ✓ |
| | | | | | KL | ✓ |
| | | | | | HP | |
| | | | | | SSC | |
| | | | | | SMC | ✓ |
| | | | | | W | ✓ |
| | | | | | Z | |
| | | | | | PC | |
| 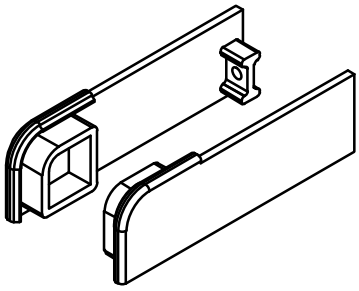 | **ACET451**<br>**Cast Cill End Caps**<br>**(Pair)** | **1** | **pair** | **ETC451** | MF | ✓ |
| | | | | | SA | |
| | | | | | KL | ✓ |
| | | | | | HP | ✓ |
| | | | | | SSC | |
| | | | | | SMC | |
| | | | | | W | ✓ |
| | | | | | Z | ✓ |
| | | | | | PC | |
| 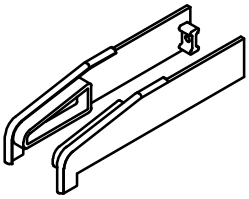 | **ACET452**<br>**Cast Cill End Caps**<br>**(Pair)** | **1** | **Pair** | **ETC452** | MF | ✓ |
| | | | | | SA | |
| | | | | | KL | ✓ |
| | | | | | HP | ✓ |
| | | | | | SSC | |
| | | | | | SMC | |
| | | | | | W | ✓ |
| | | | | | Z | ✓ |
| | | | | | PC | |
| 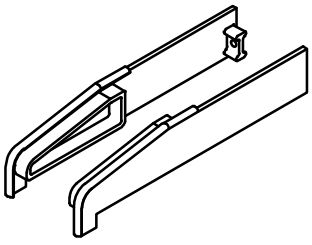 | **ACET457**<br>**Cast Cill End Caps**<br>**(Pair)** | **1** | **Pair** | **ETC457** | MF | ✓ |
| | | | | | SA | |
| | | | | | KL | ✓ |
| | | | | | HP | ✓ |
| | | | | | SSC | |
| | | | | | SMC | |
| | | | | | W | ✓ |
| | | | | | Z | ✓ |
| | | | | | PC | |

T-BARS
ACVG65=2.5mm
ACVG66=3.0mm
ACVL150=4.0mm

Screw (Grub)

**MF = Mill Finish**
**SA = Silver Anodised**
**KL = Basic Colour**
**HP = Special Colour**
**SSC = Smooth Satin Chrome**
**SMC = Smokey Chrome**
**PC = Polished Chrome**
**W = White**
**Z = Black**

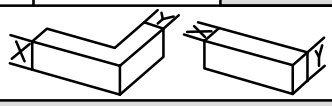

| Image | Part Code | Pack | Unit | Application | Colour | |
|---|---|---|---|---|---|---|
| 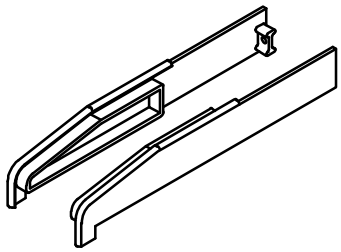 | **ACET458**<br>Cast Cill End Caps<br>(Pair) | 1 | Pair | ETC458 | MF | ✓ |
| | | | | | SA | |
| | | | | | KL | ✓ |
| | | | | | HP | ✓ |
| | | | | | SSC | |
| | | | | | SMC | |
| | | | | | W | ✓ |
| | | | | | Z | ✓ |
| | | | | | PC | |
| 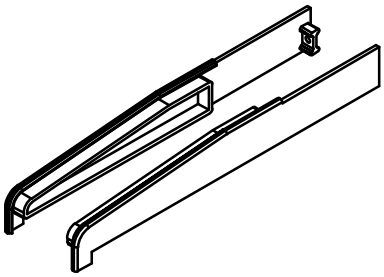 | **ACET479N**<br>Cast Cill End Caps<br>(Pair) | 1 | Pair | ETC479 | MF | ✓ |
| | | | | | SA | |
| | | | | | KL | ✓ |
| | | | | | HP | ✓ |
| | | | | | SSC | |
| | | | | | SMC | |
| | | | | | W | ✓ |
| | | | | | Z | ✓ |
| | | | | | PC | |
| 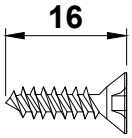  | **ACET490**<br>4.3 x 16mm CSK Polyamide Screw | 1000 | Pack | ACW20060 | MF | |
| | | | | | SA | |
| | | | | | KL | |
| | | | | | HP | |
| | | | | | SSC | |
| | | | | | SMC | |
| | | | | | W | |
| | | | | | Z | ✓ |
| | | | | | PC | |
| 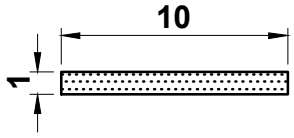  | **ACET569**<br>Astragal Bar Tape 10mm x 1mm | 50 | m | W20165 | MF | |
| | | | | | SA | |
| | | | | | KL | |
| | | | | | HP | |
| | | | | | SSC | |
| | | | | | SMC | |
| | | | | | W | |
| | | | | | Z | |
| | | | | | PC | |
| 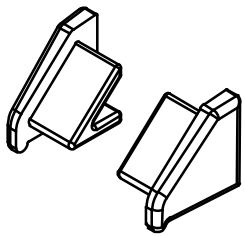 | **ACET572**<br>End cap for ETC572 | 10 | pairs | ETC572 | MF | |
| | | | | | SA | |
| | | | | | KL | |
| | | | | | HP | |
| | | | | | SSC | |
| | | | | | SMC | |
| | | | | | W | ✓ |
| | | | | | Z | ✓ |
| | | | | | PC | |

T-BARS
ACVG65=2.5mm
ACVG66=3.0mm
ACVL150=4.0mm

Screw (Grub)

| | | | |
|---|---|---|---|
| MF | = Mill Finish | W | = White |
| SA | = Silver Anodised | Z | = Black |
| KL | = Basic Colour | | |
| HP | = Special Colour | | |
| SSC | = Smooth Satin Chrome | | |
| SMC | = Smokey Chrome | | |
| PC | = Polished Chrome | | |

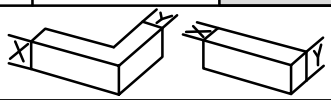

# Alitherm Heritage Door

## ACCESSORIES : PHOTOS & DRAWINGS

| Image | Part Code | Pack | Unit | Application | Colour | |
|---|---|---|---|---|---|---|
| 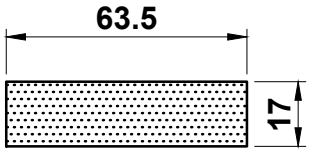  | **ACET619**<br>**Foam Infill**<br>**1250mm Lengths** | **1** | **each** | **W20112** | MF | |
| | | | | | SA | |
| | | | | | KL | |
| | | | | | HP | |
| | | | | | SSC | |
| | | | | | SMC | |
| | | | | | W | |
| | | | | | Z | |
| | | | | | PC | |
| 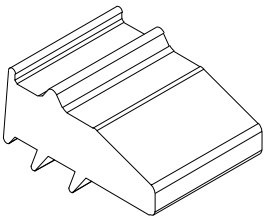 | **ACET840**<br>**5mm Low Line Internal EPDM Wedge Gasket** | **150** | **m** | | MF | |
| | | | | | SA | |
| | | | | | KL | |
| | | | | | HP | |
| | | | | | SSC | |
| | | | | | SMC | |
| | | | | | W | |
| | | | | | Z | ✓ |
| | | | | | PC | |
| 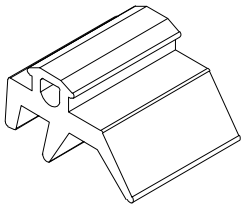 | **ACET841**<br>**4mm Low Line External EPDM Gasket** | **200** | **m** | | MF | |
| | | | | | SA | |
| | | | | | KL | |
| | | | | | HP | |
| | | | | | SSC | |
| | | | | | SMC | |
| | | | | | W | |
| | | | | | Z | ✓ |
| | | | | | PC | |
| 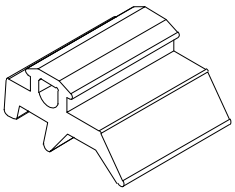 | **ACET842**<br>**3mm Low Line External Gasket** | **200** | **m** | | MF | |
| | | | | | SA | |
| | | | | | KL | |
| | | | | | HP | |
| | | | | | SSC | |
| | | | | | SMC | |
| | | | | | W | |
| | | | | | Z | ✓ |
| | | | | | PC | |
| 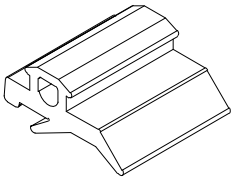 | **ACET843**<br>**2mm Low Line External Gasket** | **200** | **m** | | MF | |
| | | | | | SA | |
| | | | | | KL | |
| | | | | | HP | |
| | | | | | SSC | |
| | | | | | SMC | |
| | | | | | W | |
| | | | | | Z | ✓ |
| | | | | | PC | |

T-BARS
ACVG65=2.5mm
ACVG66=3.0mm
ACVL150=4.0mm

Screw (Grub)

**MF = Mill Finish**
**SA = Silver Anodised**
**KL = Basic Colour**
**HP = Special Colour**
**SSC = Smooth Satin Chrome**
**SMC = Smokey Chrome**
**PC = Polished Chrome**
**W = White**
**Z = Black**

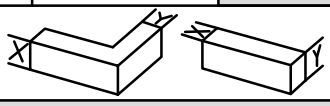

| Image | Part Code | Pack | Unit | Application | Colour | |
|---|---|---|---|---|---|---|
| 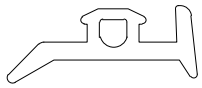 | **ACET844**<br><br>**2mm Low Line External Gasket** | **200** | **m** | | MF | |
| | | | | | SA | |
| | | | | | KL | |
| | | | | | HP | |
| | | | | | SSC | |
| | | | | | SMC | |
| | | | | | W | |
| | | | | | Z | ✓ |
| | | | | | PC | |
| 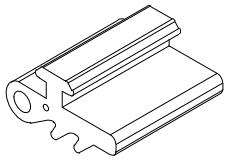 | **ACET845**<br><br>**3mm Low Line External EPDM Gasket with Rigid Backing**<br><br>**Slides into glazing bead** | **100** | **m** | | MF | |
| | | | | | SA | |
| | | | | | KL | |
| | | | | | HP | |
| | | | | | SSC | |
| | | | | | SMC | |
| | | | | | W | |
| | | | | | Z | ✓ |
| | | | | | PC | |
| 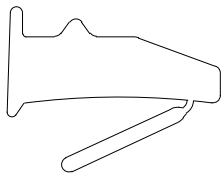 | **ACET848**<br><br>**5mm to 4mm Tear-Off Gasket** | **200** | **m** | | MF | |
| | | | | | SA | |
| | | | | | KL | |
| | | | | | HP | |
| | | | | | SSC | |
| | | | | | SMC | |
| | | | | | W | |
| | | | | | Z | ✓ |
| | | | | | PC | |
| 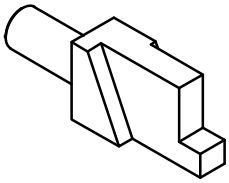 | **ACET904**<br><br>**Punches** | **1** | **pair** | **W20015**<br>**W20016** | MF | ✓ |
| | | | | | SA | |
| | | | | | KL | |
| | | | | | HP | |
| | | | | | SSC | |
| | | | | | SMC | |
| | | | | | W | |
| | | | | | Z | |
| | | | | | PC | |
| 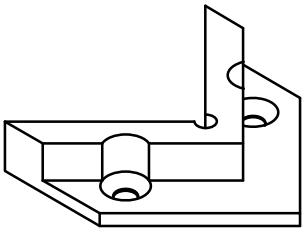 | **ACET975**<br><br>**4mm Tufnel Packer** | **1** | **each** | **W20027** | MF | ✓ |
| | | | | | SA | |
| | | | | | KL | |
| | | | | | HP | |
| | | | | | SSC | |
| | | | | | SMC | |
| | | | | | W | |
| | | | | | Z | |
| | | | | | PC | |

T-BARS
ACVG65=2.5mm
ACVG66=3.0mm
ACVL150=4.0mm

Screw (Grub)

**MF = Mill Finish**
**SA = Silver Anodised**
**KL = Basic Colour**
**HP = Special Colour**
**SSC = Smooth Satin Chrome**
**SMC = Smokey Chrome**
**PC = Polished Chrome**
**W = White**
**Z = Black**

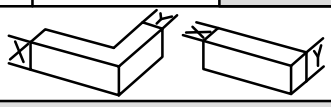

| Image | Part Code | Pack | Unit | Application | Colour | |
|---|---|---|---|---|---|---|
| 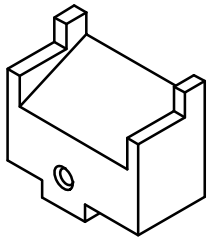 | **ACET978**<br>**Punches** | **1** | **pair** | **W20017** | MF | ✓ |
| | | | | | SA | |
| | | | | | KL | |
| | | | | | HP | |
| | | | | | SSC | |
| | | | | | SMC | |
| | | | | | W | |
| | | | | | Z | |
| | | | | | PC | |
| 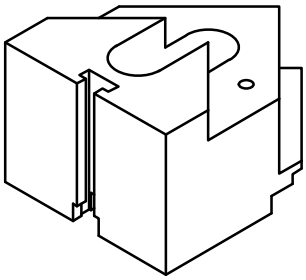 | **ACET979**<br>**Vee Block** | **1** | **each** | **W20017** | MF | ✓ |
| | | | | | SA | |
| | | | | | KL | |
| | | | | | HP | |
| | | | | | SSC | |
| | | | | | SMC | |
| | | | | | W | |
| | | | | | Z | |
| | | | | | PC | |
| 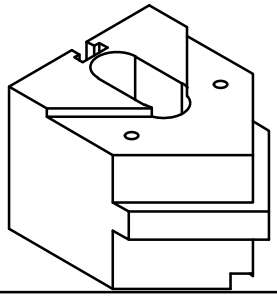 | **ACET982**<br>**Vee Block** | **1** | **each** | **W20015**<br>**W20016** | MF | ✓ |
| | | | | | SA | |
| | | | | | KL | |
| | | | | | HP | |
| | | | | | SSC | |
| | | | | | SMC | |
| | | | | | W | |
| | | | | | Z | |
| | | | | | PC | |
| 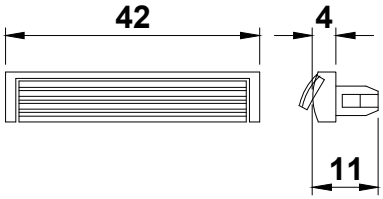 | **ACGSL045**<br>**Drainage Cap** | **100** | **pack** | | MF | |
| | | | | | SA | |
| | | | | | KL | |
| | | | | | HP | |
| | | | | | SSC | |
| | | | | | SMC | |
| | | | | | W | ✓ |
| | | | | | Z | ✓ |
| | | | | | PC | |
| 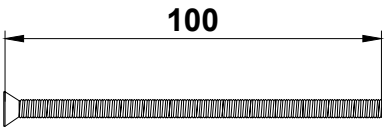 | **ACMX863**<br>**M5 X 100mm DIN 965 Screw** | **10** | **pack** | **ACCY3045NKS1**<br>**ACCY4525NKTTS3**<br>**PCX41**<br>**W20046**<br>**W20129**<br>**W20149** | MF | ✓ |
| | | | | | SA | |
| | | | | | KL | |
| | | | | | HP | |
| | | | | | SSC | |
| | | | | | SMC | |
| | | | | | W | |
| | | | | | Z | |
| | | | | | PC | |

T-BARS
ACVG65=2.5mm
ACVG66=3.0mm
ACVL150=4.0mm

Screw (Grub)

**MF = Mill Finish**
**SA = Silver Anodised**
**KL = Basic Colour**
**HP = Special Colour**
**SSC = Smooth Satin Chrome**
**SMC = Smokey Chrome**
**PC = Polished Chrome**
**W = White**
**Z = Black**

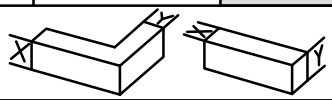

| Image | Part Code | Pack | Unit | Application | Colour | |
|---|---|---|---|---|---|---|
| 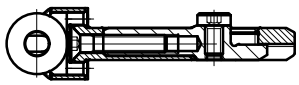 | **ACPD690**<br><br>**Roller Latch** | **1** | **each** | **W20465** | MF<br>SA<br>KL<br>HP<br>SSC<br>SMC<br>W<br>Z<br>PC | <br><br><br><br><br><br><br><br> |
| 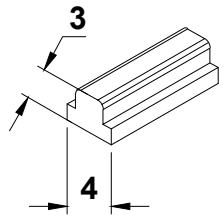  | **ACRV032**<br><br>**Sealing Gasket for Coupler** | **50** | **m** | **W20016**<br>**W20051**<br>**W20054** | MF<br>SA<br>KL<br>HP<br>SSC<br>SMC<br>W<br>Z<br>PC | <br><br><br><br><br><br><br>✓<br> |
| 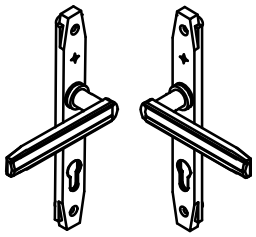 | **ACSM001N**<br><br>**Art Deco Lever/Lever Door Handle** | **1** | **pair** | **ACSM025** | MF<br>SA<br>KL<br>HP<br>SSC<br>SMC<br>W<br>Z<br>PC | <br><br><br><br><br><br>✓<br><br>✓ |
| 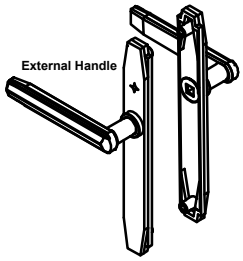  (Left Shown) | **ACSM025L/R**<br><br>**Art Deco Dummy Door Handles**<br>**No Cylinder**<br>**Handles are Fixed in Position** | **1** | **pair** | **ACSM001N** | MF<br>SA<br>KL<br>HP<br>SSC<br>SMC<br>W<br>Z<br>PC | <br><br><br><br><br><br>✓<br><br>✓ |
| 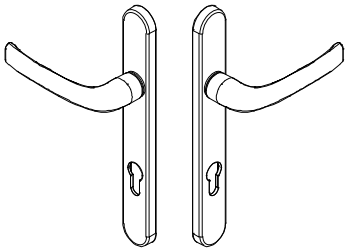 | **ACSM060**<br><br>**Heritage Lever/Lever Handle** | **1** | **pair** | **ACW20065**<br>**ACW20465**<br>**ACW20466** | MF<br>SA<br>KL<br>HP<br>SSC<br>SMC<br>W<br>Z<br>PC | <br><br><br><br><br><br><br>✓<br>✓ |

T-BARS
ACVG65=2.5mm
ACVG66=3.0mm
ACVL150=4.0mm

Screw (Grub)

| | | | |
|---|---|---|---|
| **MF** | **= Mill Finish** | **W** | **= White** |
| **SA** | **= Silver Anodised** | **Z** | **= Black** |
| **KL** | **= Basic Colour** | | |
| **HP** | **= Special Colour** | | |
| **SSC** | **= Smooth Satin Chrome** | | |
| **SMC** | **= Smokey Chrome** | | |
| **PC** | **= Polished Chrome** | | |

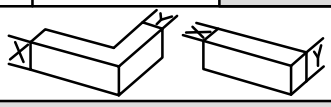

| Image | Part Code | Pack | Unit | Application | Colour | |
|---|---|---|---|---|---|---|
| 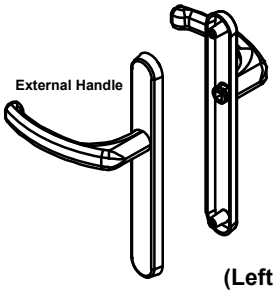  (Left Shown) | **ACSM061L/R**<br><br>**Heritage Dummy Lever Handle**<br>**Handles are Fixed in Position** | **1** | **pair** | **ACSM060** | MF | |
| | | | | | SA | |
| | | | | | KL | |
| | | | | | HP | |
| | | | | | SSC | |
| | | | | | SMC | |
| | | | | | W | |
| | | | | | Z | ✓ |
| | | | | | PC | ✓ |
| 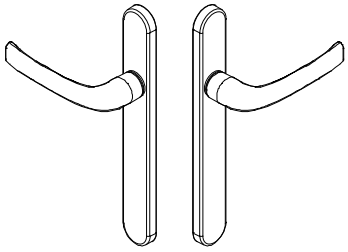 | **ACSM062**<br><br>**Heritage Lever/Lever Handle**<br>**(No Euro cylinder)** | **1** | **pair** | **ACW20065**<br>**ACW20465**<br>**ACW20466** | MF | |
| | | | | | SA | |
| | | | | | KL | |
| | | | | | HP | |
| | | | | | SSC | |
| | | | | | SMC | |
| | | | | | W | |
| | | | | | Z | ✓ |
| | | | | | PC | ✓ |
| 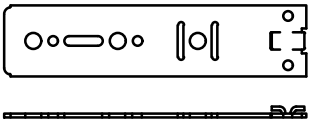 | **ACUN23X**<br><br>**Screw Fixing Lug**<br>**B x 38mm x 2mm**<br><br>**ACUN230: B = 160mm**<br>**ACUN232: B = 240mm**<br>**ACUN233: B = 280mm** | **100** | **Pack** | **ETC451**<br>**ETC452**<br>**ETC457**<br>**ETC458**<br>**ETC478**<br>**ETC479** | MF | ✓ |
| | | | | | SA | |
| | | | | | KL | |
| | | | | | HP | |
| | | | | | SSC | |
| | | | | | SMC | |
| | | | | | W | |
| | | | | | Z | |
| | | | | | PC | |
| 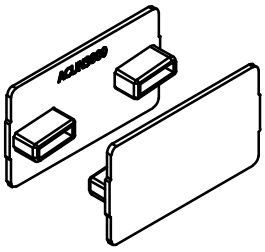 | **ACUN3000**<br><br>**UN3000 End Cap** | **10** | **pack** | **UN3000** | MF | |
| | | | | | SA | |
| | | | | | KL | |
| | | | | | HP | |
| | | | | | SSC | |
| | | | | | SMC | |
| | | | | | W | |
| | | | | | Z | ✓ |
| | | | | | PC | |
| 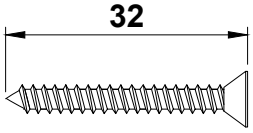  | **ACUN3512**<br><br>**No.8 X 32mm CSK SS Pozi Screw** | **100** | **pack** | | MF | ✓ |
| | | | | | SA | |
| | | | | | KL | |
| | | | | | HP | |
| | | | | | SSC | |
| | | | | | SMC | |
| | | | | | W | |
| | | | | | Z | |
| | | | | | PC | |

T-BARS
ACVG65=2.5mm
ACVG66=3.0mm
ACVL150=4.0mm

Screw (Grub)

**MF = Mill Finish**
**SA = Silver Anodised**
**KL = Basic Colour**
**HP = Special Colour**
**SSC = Smooth Satin Chrome**
**SMC = Smokey Chrome**
**PC = Polished Chrome**
**W = White**
**Z = Black**

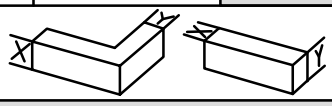

| Image | Part Code | Pack | Unit | Application | Colour | |
|---|---|---|---|---|---|---|
| | **ACUN3532**<br>**M4 Threaded Insert** | **20** | **pack** | **PAS24 Requirement** | MF | ✓ |
| | | | | | SA | |
| | | | | | KL | |
| | | | | | HP | |
| | | | | | SSC | |
| | | | | | SMC | |
| | | | | | W | |
| | | | | | Z | |
| | | | | | PC | |
| 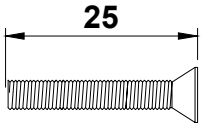 | **ACUN3537**<br>**M4 X 25mm Pozi CSK M/C Screw** | **100** | **pack** | **ACET269<br>W20015<br>W20016<br>W20017<br>W20111<br>W20112** | MF | ✓ |
| | | | | | SA | |
| | | | | | KL | |
| | | | | | HP | |
| | | | | | SSC | |
| | | | | | SMC | |
| | | | | | W | |
| | | | | | Z | |
| | | | | | PC | |
| 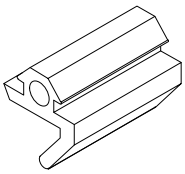 | **ACVL032**<br>**EPDM Flipper Gasket** | **100** | **m** | | MF | |
| | | | | | SA | |
| | | | | | KL | |
| | | | | | HP | |
| | | | | | SSC | |
| | | | | | SMC | |
| | | | | | W | |
| | | | | | Z | ✓ |
| | | | | | PC | |
| 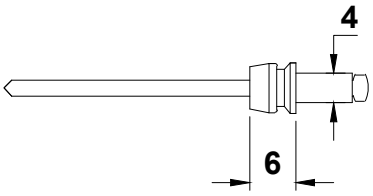 | **ACVL061**<br>**Rivet to secure VL72** | **100** | **Pack** | **ETC572<br>VL72** | MF | ✓ |
| | | | | | SA | |
| | | | | | KL | |
| | | | | | HP | |
| | | | | | SSC | |
| | | | | | SMC | |
| | | | | | W | |
| | | | | | Z | |
| | | | | | PC | |
|  | **ACVL069**<br>**Astragal Bar Tape 20mm x 1mm** | **33** | **m** | **W20166** | MF | |
| | | | | | SA | |
| | | | | | KL | |
| | | | | | HP | |
| | | | | | SSC | |
| | | | | | SMC | |
| | | | | | W | |
| | | | | | Z | ✓ |
| | | | | | PC | |

T-BARS
ACVG65=2.5mm
ACVG66=3.0mm
ACVL150=4.0mm

Screw (Grub)

**MF = Mill Finish**
**SA = Silver Anodised**
**KL = Basic Colour**
**HP = Special Colour**
**SSC = Smooth Satin Chrome**
**SMC = Smokey Chrome**
**PC = Polished Chrome**
**W = White**
**Z = Black**

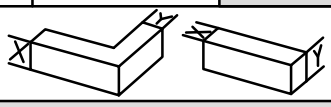

| Image | Part Code | Pack | Unit | Application | | |
|---|---|---|---|---|---|---|
| 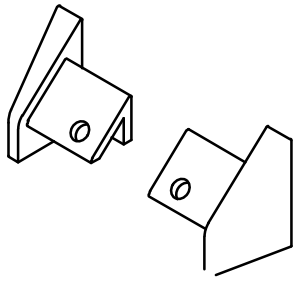 | **ACVL072**<br>**Cast End Cap** | **2** | **Pair** | **VL72** | MF<br>SA<br>KL<br>HP<br>SSC<br>SMC<br>W<br>Z<br>PC | <br><br>✓<br>✓<br><br><br>✓<br>✓<br> |
| 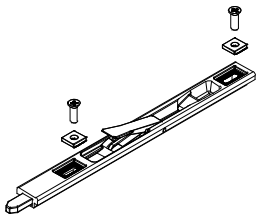 | **ACVL432**<br>**Shoot Bolt** | **1** | **each** | **ACW20065**<br>**W20048**<br>**ACW20432** | MF<br>SA<br>KL<br>HP<br>SSC<br>SMC<br>W<br>Z<br>PC | ✓<br><br><br><br><br><br><br><br> |
| | **ACVS033**<br>**4.8mm x 9mm Black Woolpile with Fin** | **150** | **m** | **W20270**<br>**W20271**<br>**W20272**<br>**W20274** | MF<br>SA<br>KL<br>HP<br>SSC<br>SMC<br>W<br>Z<br>PC | <br><br><br><br><br><br><br>✓<br> |
| 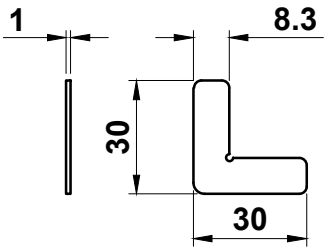 | **ACW20024**<br>**Stainless Steel Chevron** | **100** | **pack** | **W20027**<br>**W20125N**<br>**W20127** | MF<br>SA<br>KL<br>HP<br>SSC<br>SMC<br>W<br>Z<br>PC | ✓<br><br><br><br><br><br><br><br> |
| 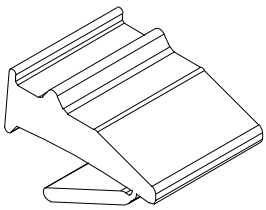 | **ACW20038**<br>**4-3mm Tear-away Low-line EPDM Wedge Gasket**<br>**Black Only** | **200** | **m** | | MF<br>SA<br>KL<br>HP<br>SSC<br>SMC<br>W<br>Z<br>PC | <br><br><br><br><br><br><br>✓<br> |

T-BARS
ACVG65=2.5mm
ACVG66=3.0mm
ACVL150=4.0mm

Screw (Grub)

**MF = Mill Finish**
**SA = Silver Anodised**
**KL = Basic Colour**
**HP = Special Colour**
**SSC = Smooth Satin Chrome**
**SMC = Smokey Chrome**
**PC = Polished Chrome**
**W = White**
**Z = Black**

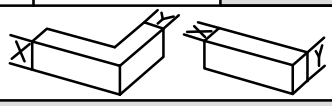

| Image | Part Code | Pack | Unit | Application | Colour | |
|---|---|---|---|---|---|---|
| 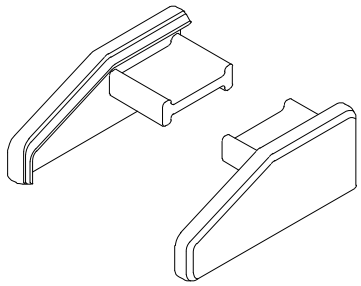 | **ACW20039**<br>**Transom End Caps** | **10** | **pairs** | **W20039** | MF | |
| | | | | | SA | |
| | | | | | KL | |
| | | | | | HP | |
| | | | | | SSC | |
| | | | | | SMC | |
| | | | | | W | ✓ |
| | | | | | Z | ✓ |
| | | | | | PC | |
| 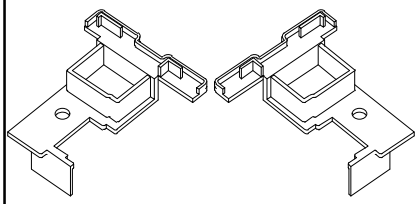 | **ACW20048**<br>**End Cap** | **10** | **pairs** | **W20048** | MF | |
| | | | | | SA | |
| | | | | | KL | |
| | | | | | HP | |
| | | | | | SSC | |
| | | | | | SMC | |
| | | | | | W | ✓ |
| | | | | | Z | ✓ |
| | | | | | PC | |
| 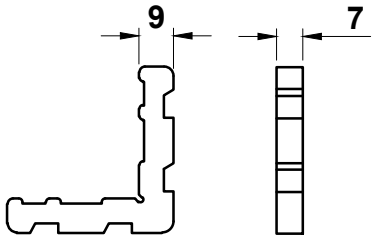  | **ACW20056**<br>**Corner Cleat** | **24** | **pack** | **W20027**<br>**W20127** | MF | ✓ |
| | | | | | SA | |
| | | | | | KL | |
| | | | | | HP | |
| | | | | | SSC | |
| | | | | | SMC | |
| | | | | | W | |
| | | | | | Z | |
| | | | | | PC | |
| 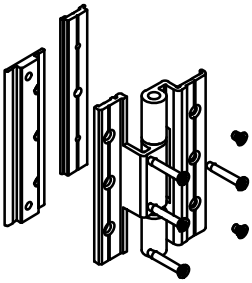 | **ACW20060**<br>**Open Out Butt Hinge** | **1** | **each** | **W20027**<br>**W20127** | MF | ✓ |
| | | | | | SA | |
| | | | | | KL | ✓ |
| | | | | | HP | ✓ |
| | | | | | SSC | |
| | | | | | SMC | |
| | | | | | W | ✓ |
| | | | | | Z | ✓ |
| | | | | | PC | |
| 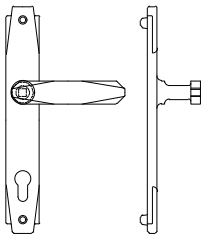 | **ACW20062**<br>**Art Deco Lever / Lever Handle Includes Cylinder Cut Out**<br>**Available in Antique Brass and Satin Nickel Plate** | **1** | **Pair** | **ACW20065**<br>**ACW20465**<br>**ACW20466** | MF | |
| | | | | | SA | |
| | | | | | KL | ✓ |
| | | | | | HP | ✓ |
| | | | | | SSC | |
| | | | | | SMC | |
| | | | | | W | ✓ |
| | | | | | Z | ✓ |
| | | | | | PC | ✓ |

T-BARS
ACVG65=2.5mm
ACVG66=3.0mm
ACVL150=4.0mm

Screw (Grub)

**MF = Mill Finish**
**SA = Silver Anodised**
**KL = Basic Colour**
**HP = Special Colour**
**SSC = Smooth Satin Chrome**
**SMC = Smokey Chrome**
**PC = Polished Chrome**
**W = White**
**Z = Black**

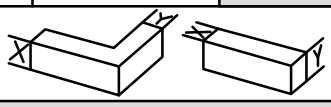

| Image | Part Code | Pack | Unit | Application | Colour | |
|---|---|---|---|---|---|---|
| 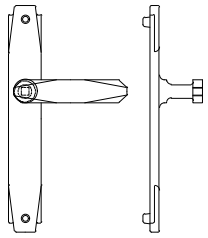 | **ACW20063**<br><br>**Art Deco Dummy Lever Handle Without Cylinder Cut Out**<br><br>**Available in Antique Brass and Satin Nickel Plate** | **1** | **Pair** | **ACW20062**<br>**ACW20263** | MF | |
| | | | | | SA | |
| | | | | | KL | ✓ |
| | | | | | HP | ✓ |
| | | | | | SSC | |
| | | | | | SMC | |
| | | | | | W | ✓ |
| | | | | | Z | ✓ |
| | | | | | PC | ✓ |
| | | | | | MF | |
| | | | | | SA | |
| | | | | | KL | |
| | | | | | HP | |
| | | | | | SSC | |
| | | | | | SMC | |
| | | | | | W | |
| | | | | | Z | |
| | | | | | PC | |
| | | | | | MF | |
| | | | | | SA | |
| | | | | | KL | |
| | | | | | HP | |
| | | | | | SSC | |
| | | | | | SMC | |
| | | | | | W | |
| | | | | | Z | |
| | | | | | PC | |
| | | | | | MF | |
| | | | | | SA | |
| | | | | | KL | |
| | | | | | HP | |
| | | | | | SSC | |
| | | | | | SMC | |
| | | | | | W | |
| | | | | | Z | |
| | | | | | PC | |
| | | | | | MF | |
| | | | | | SA | |
| | | | | | KL | |
| | | | | | HP | |
| | | | | | SSC | |
| | | | | | SMC | |
| | | | | | W | |
| | | | | | Z | |
| | | | | | PC | |

T-BARS
ACVG65=2.5mm
ACVG66=3.0mm
ACVL150=4.0mm

Screw (Grub)

**MF = Mill Finish**
**SA = Silver Anodised**
**KL = Basic Colour**
**HP = Special Colour**
**SSC = Smooth Satin Chrome**
**SMC = Smokey Chrome**
**PC = Polished Chrome**
**W = White**
**Z = Black**

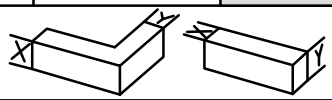

| Image | Part Code | Pack | Unit | Application | Colour |
|---|---|---|---|---|---|
| 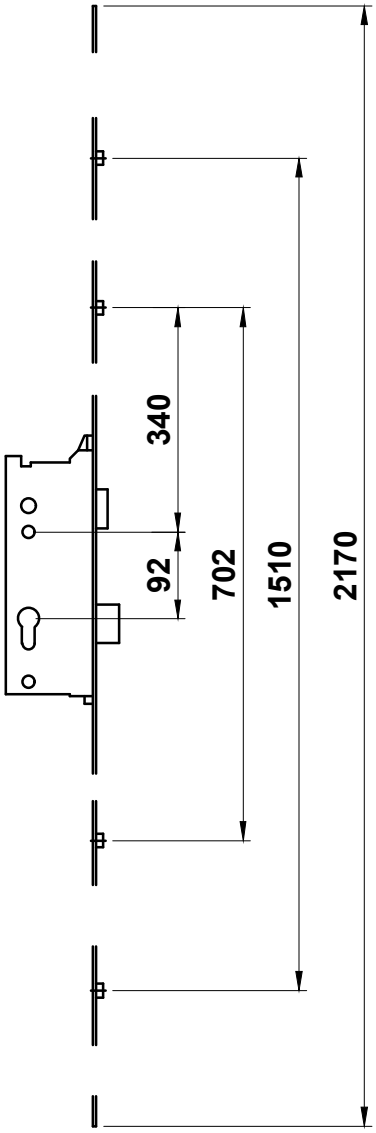  | **ACW20065**<br><br>**Open In & Open Out**<br>**Standard Primary Lock**<br>**55mm Set Back**<br><br> 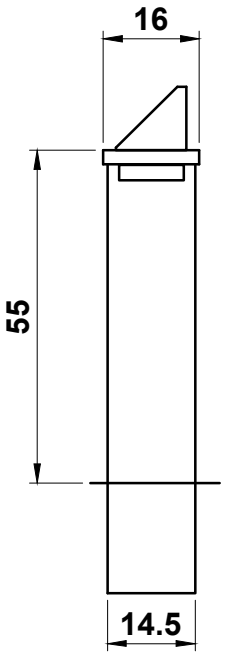  | 1 | each | ACVL432<br>ACW20066<br>ACW20067<br>ACW20166<br>W20027<br>W20125N<br>W20127 | MF ✓<br>SA<br>KL<br>HP<br>SSC<br>SMC<br>W<br>Z<br>PC |

T-BARS
ACVG65=2.5mm
ACVG66=3.0mm
ACVL150=4.0mm

Screw (Grub)

| | | | |
|---|---|---|---|
| MF | = Mill Finish | W | = White |
| SA | = Silver Anodised | Z | = Black |
| KL | = Basic Colour | | |
| HP | = Special Colour | | |
| SSC | = Smooth Satin Chrome | | |
| SMC | = Smokey Chrome | | |
| PC | = Polished Chrome | | |

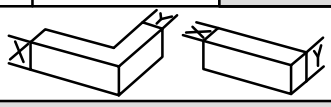

| Image | Part Code | Pack | Unit | Application | Colour |
|---|---|---|---|---|---|
| 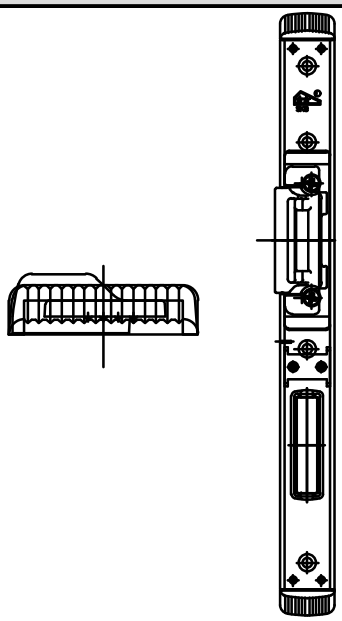 | **ACW20066 L/R**<br>**Open Out Centre Keep**<br>**Viewed Externally**<br> 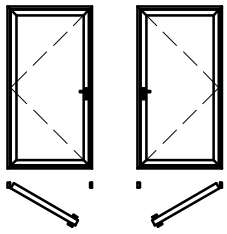 <br>**Left Hand Open Out** **Right Hand Open Out** | 1 | each | W20027<br>W20124<br>W20127<br>ACW20065<br>ACW20067<br>ACW20367<br>ACW20465 | MF ✓<br>SA<br>KL<br>HP<br>SSC<br>SMC<br>W<br>Z<br>PC |
| 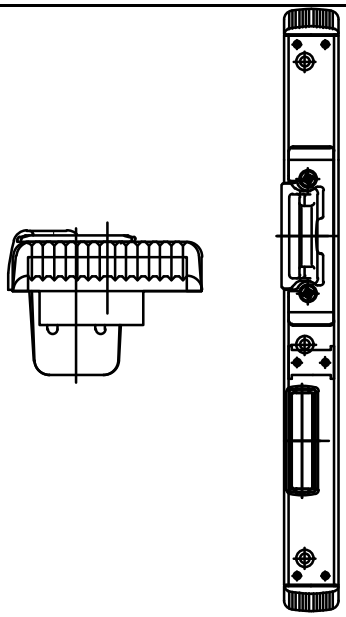 | **ACW20166 L/R**<br>**Open In Centre Keep**<br>**Viewed Externally**<br> 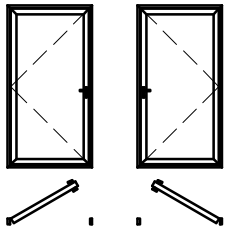 <br>**Right Hand Open In** **Left Hand Open In** | 1 | each | W20125<br>W20129<br>ACW20065<br>ACW20067<br>ACW20367<br>ACW20465 | MF ✓<br>SA<br>KL<br>HP<br>SSC<br>SMC<br>W<br>Z<br>PC |
| 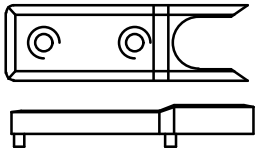 | **ACW20067**<br>**Roller Keeps** | 4 | set | ACW20065<br>W20015<br>W20048 | MF<br>SA<br>KL<br>HP<br>SSC<br>SMC<br>W<br>Z ✓<br>PC |

T-BARS
ACVG65=2.5mm
ACVG66=3.0mm
ACVL150=4.0mm

Screw (Grub)

| | | | |
|---|---|---|---|
| MF | = Mill Finish | W | = White |
| SA | = Silver Anodised | Z | = Black |
| KL | = Basic Colour | | |
| HP | = Special Colour | | |
| SSC | = Smooth Satin Chrome | | |
| SMC | = Smokey Chrome | | |
| PC | = Polished Chrome | | |

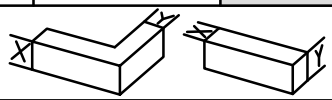

| Image | Part Code | Pack | Unit | Application | Colour |
|---|---|---|---|---|---|
| 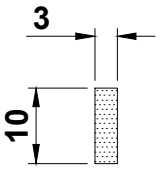 | **ACW20073**<br>3mm x 10mm Glazing Tape | 20 | m | W20026<br>W20127 | MF ✓<br>SA<br>KL<br>HP<br>SSC<br>SMC<br>W<br>Z<br>PC |
| 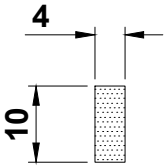 | **ACW20074**<br>4mm x 10mm Glazing Tape | 15 | m | W20026<br>W20127 | MF ✓<br>SA<br>KL<br>HP<br>SSC<br>SMC<br>W<br>Z<br>PC |
| 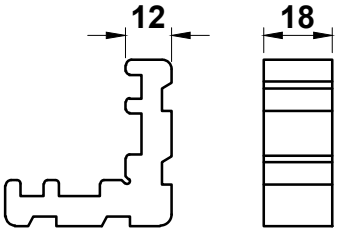 | **ACW20110**<br>Crimping Cleat | 24 | pack | W20110 | MF ✓<br>SA<br>KL<br>HP<br>SSC<br>SMC<br>W<br>Z<br>PC |
| 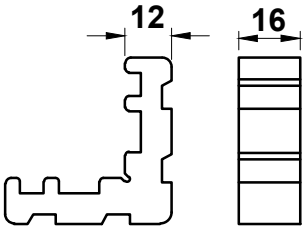 | **ACW20117**<br>Crimping Cleat | 24 | pack | W20017<br>W20112 | MF ✓<br>SA<br>KL<br>HP<br>SSC<br>SMC<br>W<br>Z<br>PC |
| 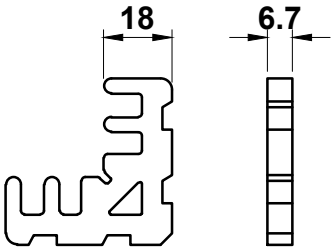 | **ACW20121**<br>Crimping Cleat | 24 | pack | W20124 | MF ✓<br>SA<br>KL<br>HP<br>SSC<br>SMC<br>W<br>Z<br>PC |

T-BARS
ACVG65=2.5mm
ACVG66=3.0mm
ACVL150=4.0mm

Screw (Grub)

| | | | |
|---|---|---|---|
| MF | = Mill Finish | W | = White |
| SA | = Silver Anodised | Z | = Black |
| KL | = Basic Colour | | |
| HP | = Special Colour | | |
| SSC | = Smooth Satin Chrome | | |
| SMC | = Smokey Chrome | | |
| PC | = Polished Chrome | | |

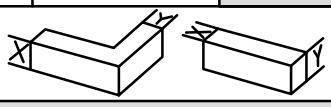

| Image | Part Code | Pack | Unit | Application | Colour | |
|---|---|---|---|---|---|---|
| 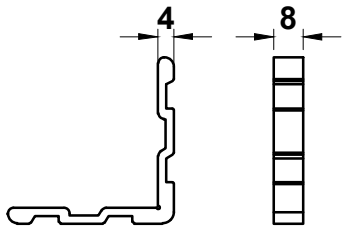 | **ACW20125**<br>**Crimping Cleat** | **24** | **pack** | **W20125N** | MF | ✓ |
| | | | | | SA | |
| | | | | | KL | |
| | | | | | HP | |
| | | | | | SSC | |
| | | | | | SMC | |
| | | | | | W | |
| | | | | | Z | |
| | | | | | PC | |
| 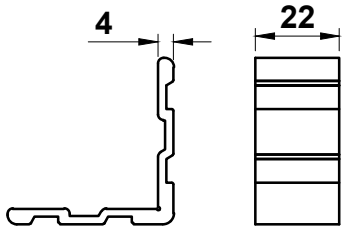 | **ACW20126**<br>**Crimping Cleat** | **24** | **pack** | **W20125N** | MF | ✓ |
| | | | | | SA | |
| | | | | | KL | |
| | | | | | HP | |
| | | | | | SSC | |
| | | | | | SMC | |
| | | | | | W | |
| | | | | | Z | |
| | | | | | PC | |
| 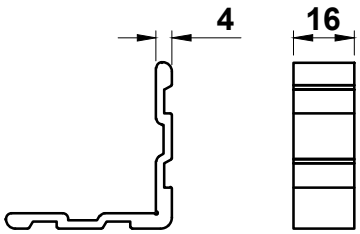 | **ACW20127**<br>**Crimping Cleat** | **24** | **pack** | **W20027**<br>**W20124**<br>**W20127** | MF | ✓ |
| | | | | | SA | |
| | | | | | KL | |
| | | | | | HP | |
| | | | | | SSC | |
| | | | | | SMC | |
| | | | | | W | |
| | | | | | Z | |
| | | | | | PC | |
| 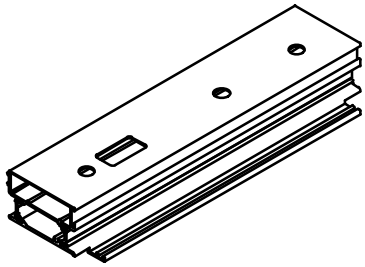 | **ACW20138 L/R**<br>**285mm Pre Prepared Lock Casing Open In & Open Out**<br> 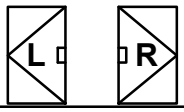 | **1** | **each** | **W20027**<br>**W20127**<br>**W20125N** | MF | ✓ |
| | | | | | SA | |
| | | | | | KL | ✓ |
| | | | | | HP | ✓ |
| | | | | | SSC | |
| | | | | | SMC | |
| | | | | | W | ✓ |
| | | | | | Z | ✓ |
| | | | | | PC | |
| 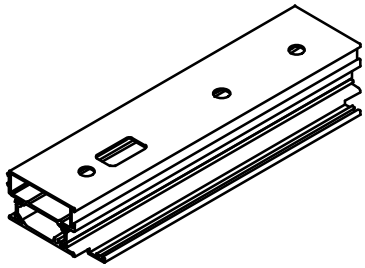 | **ACW20140 L/R**<br>**285mm Pre Prepared Lock Casing Open In & Out**<br> 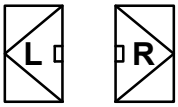 | **1** | **each** | **W20124**<br>**W20129** | MF | ✓ |
| | | | | | SA | |
| | | | | | KL | ✓ |
| | | | | | HP | ✓ |
| | | | | | SSC | |
| | | | | | SMC | |
| | | | | | W | ✓ |
| | | | | | Z | ✓ |
| | | | | | PC | |

T-BARS
ACVG65=2.5mm
ACVG66=3.0mm
ACVL150=4.0mm

Screw (Grub)

**MF = Mill Finish**
**SA = Silver Anodised**
**KL = Basic Colour**
**HP = Special Colour**
**SSC = Smooth Satin Chrome**
**SMC = Smokey Chrome**
**PC = Polished Chrome**
**W = White**
**Z = Black**

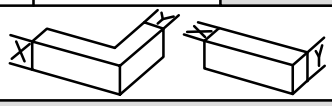

| Image | Part Code | Pack | Unit | Application | Colour | |
|---|---|---|---|---|---|---|
| 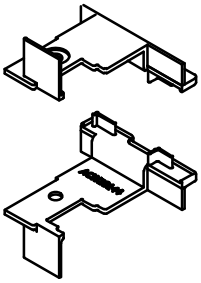 | **ACW20144**<br>**End Cap** | **1** | **pair** | **W20046** | MF | |
| | | | | | SA | |
| | | | | | KL | |
| | | | | | HP | |
| | | | | | SSC | |
| | | | | | SMC | |
| | | | | | W | ✓ |
| | | | | | Z | ✓ |
| | | | | | PC | |
| 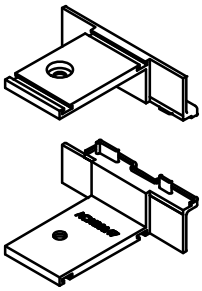 | **ACW20147**<br>**End Cap** | **1** | **pair** | **W20046** | MF | |
| | | | | | SA | |
| | | | | | KL | |
| | | | | | HP | |
| | | | | | SSC | |
| | | | | | SMC | |
| | | | | | W | ✓ |
| | | | | | Z | ✓ |
| | | | | | PC | |
| 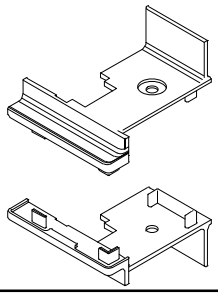 | **ACW20148**<br>**End Caps**<br>**(10 Pairs Per Pack)** | **10** | **pair** | **W20148** | MF | |
| | | | | | SA | |
| | | | | | KL | |
| | | | | | HP | |
| | | | | | SSC | |
| | | | | | SMC | |
| | | | | | W | ✓ |
| | | | | | Z | ✓ |
| | | | | | PC | |
| 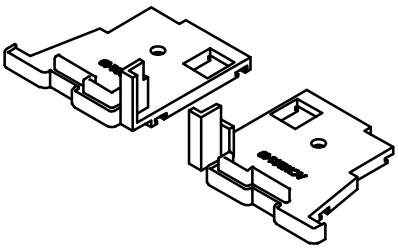 | **ACW20149**<br>**End Caps** | **1** | **pair** | **W20149** | MF | |
| | | | | | SA | |
| | | | | | KL | |
| | | | | | HP | |
| | | | | | SSC | |
| | | | | | SMC | |
| | | | | | W | ✓ |
| | | | | | Z | ✓ |
| | | | | | PC | |
| 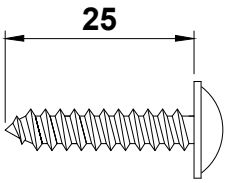 | **ACW20160**<br>**No.12 x 1" Pozi Flange**<br>**Stainless Steel**<br>**Self Tapper** | **100** | **pack** | **W20015**<br>**W20016**<br>**W20111** | MF | ✓ |
| | | | | | SA | |
| | | | | | KL | |
| | | | | | HP | |
| | | | | | SSC | |
| | | | | | SMC | |
| | | | | | W | |
| | | | | | Z | |
| | | | | | PC | |

T-BARS
ACVG65=2.5mm
ACVG66=3.0mm
ACVL150=4.0mm

Screw (Grub)

**MF = Mill Finish**
**SA = Silver Anodised**
**KL = Basic Colour**
**HP = Special Colour**
**SSC = Smooth Satin Chrome**
**SMC = Smokey Chrome**
**PC = Polished Chrome**
**W = White**
**Z = Black**

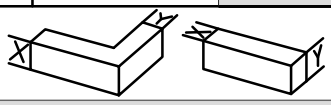

| Image | Part Code | Pack | Unit | Application | Colour | |
|---|---|---|---|---|---|---|
| 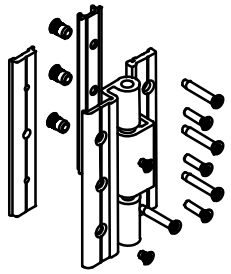 | **ACW20164**<br>**Open In Hinge Kit** | **1** | **each** | **W20125N**<br>**W20129** | MF<br>SA<br>KL<br>HP<br>SSC<br>SMC<br>W<br>Z<br>PC | <br><br>✓<br><br><br><br>✓<br>✓<br> |
| 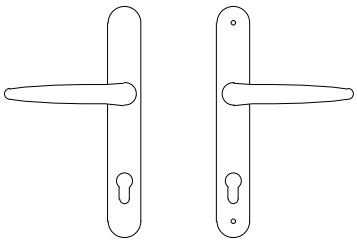 | **ACW20261**<br>**Standard Lever/Lever Handle**<br>**Fixing kit supplied** | **1** | **pair** | **ACW20065**<br>**ACW20465**<br>**ACW20466** | MF<br>SA<br>KL<br>HP<br>SSC<br>SMC<br>W<br>Z<br>PC | <br>✓<br><br><br>✓<br>✓<br>✓<br>✓<br>✓ |
| 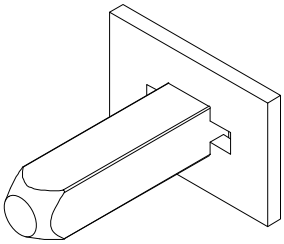 | **ACW20263**<br>**Fixed Lever Block** | **1** | **each** | **ACW20063** | MF<br>SA<br>KL<br>HP<br>SSC<br>SMC<br>W<br>Z<br>PC | <br><br><br><br><br><br><br><br> |
| 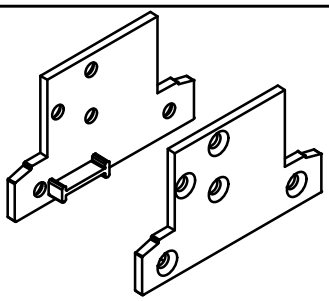 | **ACW20270**<br>**End Caps** | **2** | **pair** | **W20270** | MF<br>SA<br>KL<br>HP<br>SSC<br>SMC<br>W<br>Z<br>PC | <br><br><br><br><br><br>✓<br>✓<br> |
| 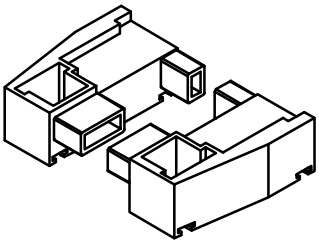 | **ACW20272**<br>**End Caps** | **1** | **pair** | **W20272** | MF<br>SA<br>KL<br>HP<br>SSC<br>SMC<br>W<br>Z<br>PC | <br><br><br><br><br><br>✓<br>✓<br> |

T-BARS
ACVG65=2.5mm
ACVG66=3.0mm
ACVL150=4.0mm

Screw (Grub)

**MF = Mill Finish**
**SA = Silver Anodised**
**KL = Basic Colour**
**HP = Special Colour**
**SSC = Smooth Satin Chrome**
**SMC = Smokey Chrome**
**PC = Polished Chrome**
**W = White**
**Z = Black**

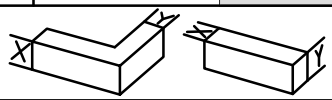

| Image | Part Code | Pack | Unit | Application | Colour | |
|---|---|---|---|---|---|---|
| 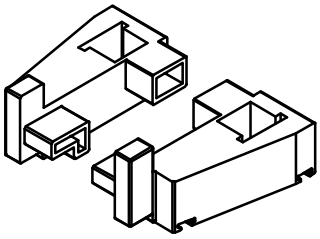 | **ACW20292**<br>**End Caps** | **1** | **pair** | **W20274** | MF | |
| | | | | | SA | |
| | | | | | KL | |
| | | | | | HP | |
| | | | | | SSC | |
| | | | | | SMC | |
| | | | | | W | ✓ |
| | | | | | Z | ✓ |
| | | | | | PC | |
| 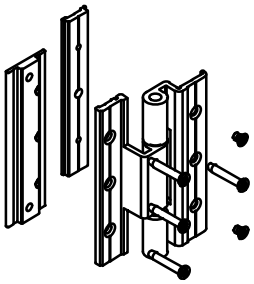 | **ACW20360**<br>**PAS24 Open Out Hinge Kit** | **1** | **each** | **W20124** | MF | ✓ |
| | | | | | SA | |
| | | | | | KL | ✓ |
| | | | | | HP | ✓ |
| | | | | | SSC | |
| | | | | | SMC | |
| | | | | | W | ✓ |
| | | | | | Z | ✓ |
| | | | | | PC | |
| 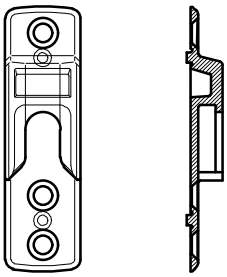 | **ACW20367**<br>**PAS24 Rollers Keep** | **1** | **each** | **ACW20465**<br>**ACW20466** | MF | ✓ |
| | | | | | SA | |
| | | | | | KL | |
| | | | | | HP | |
| | | | | | SSC | |
| | | | | | SMC | |
| | | | | | W | |
| | | | | | Z | |
| | | | | | PC | |
| 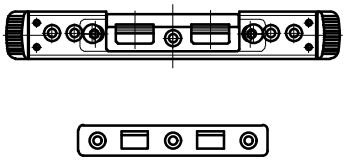 | **ACW20375**<br>**Hinge Protectors** | **1** | **each** | **W20124**<br>**W20129**<br>**ACW20164**<br>**ACW20360** | MF | ✓ |
| | | | | | SA | |
| | | | | | KL | |
| | | | | | HP | |
| | | | | | SSC | |
| | | | | | SMC | |
| | | | | | W | |
| | | | | | Z | |
| | | | | | PC | |
| 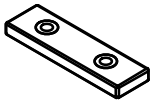 | **ACW20382**<br>**M4 Fixing Plate** | **10** | **pack** | **ACET269**<br>**W20015**<br>**W20016**<br>**W20017**<br>**W20111**<br>**W20112** | MF | ✓ |
| | | | | | SA | |
| | | | | | KL | |
| | | | | | HP | |
| | | | | | SSC | |
| | | | | | SMC | |
| | | | | | W | |
| | | | | | Z | |
| | | | | | PC | |

T-BARS
ACVG65=2.5mm
ACVG66=3.0mm
ACVL150=4.0mm

Screw (Grub)

**MF = Mill Finish**
**SA = Silver Anodised**
**KL = Basic Colour**
**HP = Special Colour**
**SSC = Smooth Satin Chrome**
**SMC = Smokey Chrome**
**PC = Polished Chrome**
**W = White**
**Z = Black**

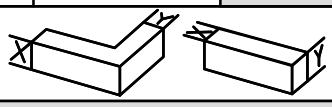

# Alitherm Heritage Door

ACCESSORIES : PHOTOS & DRAWINGS

| Image | Part Code | Pack | Unit | Application | Colour | |
|---|---|---|---|---|---|---|
| 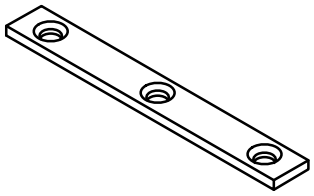 | **ACW20383**<br>**PAS24 M4 Fixing Plate** | 8 | Pack | W20129 | MF<br>SA<br>KL<br>HP<br>SSC<br>SMC<br>W<br>Z<br>PC | <br><br><br><br><br><br><br>✓<br> |
| 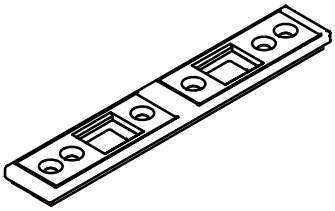 | **ACW20385**<br>**Double Door Keep Kit** | 1 | each | W20015<br>W20016<br>W20017<br>W20111<br>W20112<br>W20129 | MF<br>SA<br>KL<br>HP<br>SSC<br>SMC<br>W<br>Z<br>PC | ✓<br><br><br><br><br><br><br><br> |
| 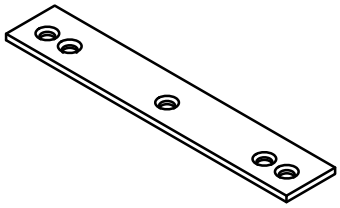 | **ACW20386**<br>**PAS24 M4 Fixing Plate** | 8 | Pack | W20015<br>W20016<br>W20017<br>W20111<br>W20112 | MF<br>SA<br>KL<br>HP<br>SSC<br>SMC<br>W<br>Z<br>PC | <br><br><br><br><br><br><br>✓<br> |
| 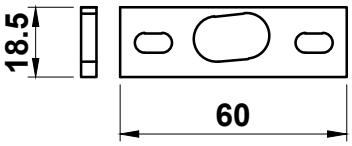 | **ACW20432**<br>**Shootbolt Keep** | 2 | pack | W20015<br>W20016<br>W20017<br>W20111<br>W20112<br>ACVL432 | MF<br>SA<br>KL<br>HP<br>SSC<br>SMC<br>W<br>Z<br>PC | ✓<br><br><br><br><br><br><br><br> |
| 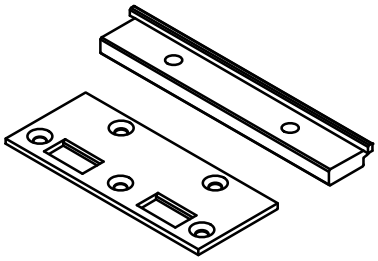 | **ACW20437**<br>**Double Door Keep** | 1 | Kit | W20015<br>W20016<br>W20017<br>W20111<br>W20112<br>W20124 | MF<br>SA<br>KL<br>HP<br>SSC<br>SMC<br>W<br>Z<br>PC | ✓<br><br><br><br><br><br><br><br> |

T-BARS
ACVG65=2.5mm
ACVG66=3.0mm
ACVL150=4.0mm

Screw (Grub)

| | | | |
|---|---|---|---|
| MF | = Mill Finish | W | = White |
| SA | = Silver Anodised | Z | = Black |
| KL | = Basic Colour | | |
| HP | = Special Colour | | |
| SSC | = Smooth Satin Chrome | | |
| SMC | = Smokey Chrome | | |
| PC | = Polished Chrome | | |

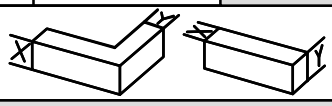

| Image | Part Code | Pack | Unit | Application | Colour |
|---|---|---|---|---|---|
| 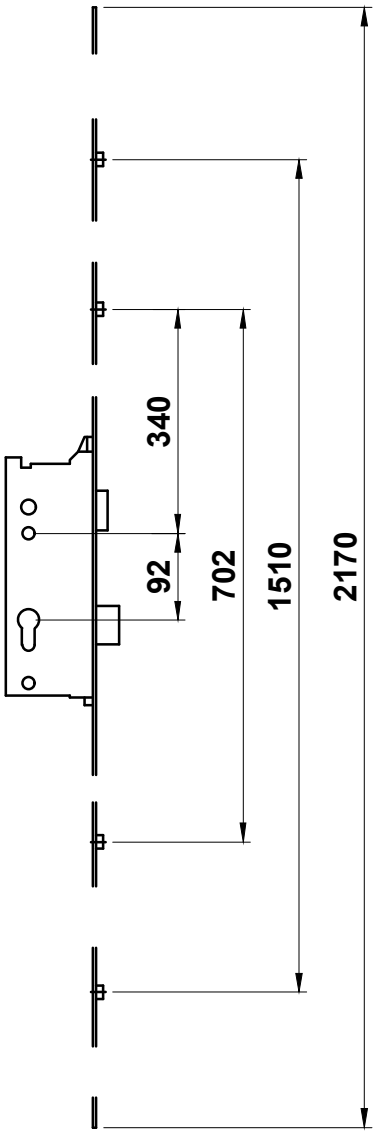  | **ACW20465**<br><br>**Euro Cylinder Profile Open In & Out Primary Lock 65mm Set Back (PAS24 Option)**<br><br> 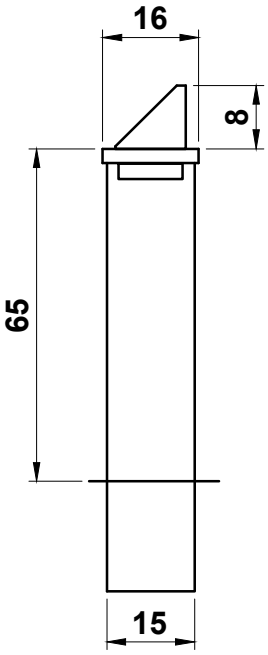  | 1 | each | **ACDV737**<br>**ACDV738**<br>**ACPD690**<br>**ACW20066**<br>**ACW20166**<br>**ACW20367**<br>**ACW20466**<br>**W20124**<br>**W20129** | MF ✓<br>SA<br>KL<br>HP<br>SSC<br>SMC<br>W<br>Z<br>PC |

T-BARS
ACVG65=2.5mm
ACVG66=3.0mm
ACVL150=4.0mm

Screw (Grub)

| | | | |
|---|---|---|---|
| **MF** | **= Mill Finish** | **W** | **= White** |
| **SA** | **= Silver Anodised** | **Z** | **= Black** |
| **KL** | **= Basic Colour** | | |
| **HP** | **= Special Colour** | | |
| **SSC** | **= Smooth Satin Chrome** | | |
| **SMC** | **= Smokey Chrome** | | |
| **PC** | **= Polished Chrome** | | |

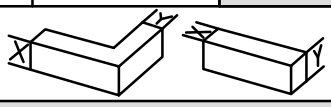

| Image | Part Code | Pack | Unit | Application | Colour |
|---|---|---|---|---|---|
| 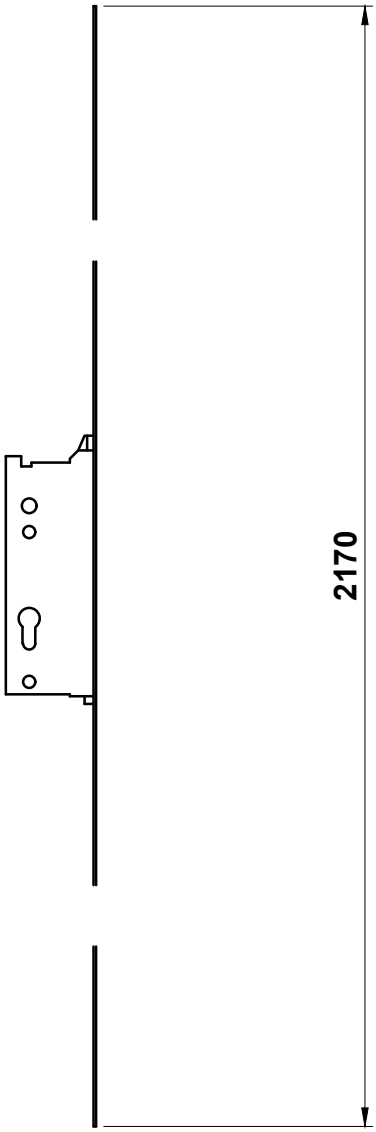  | **ACW20466**<br><br>**Euro Cylinder Profile Open In & Out Secondary Lock 65mm Set Back (PAS24 Option)**<br><br> 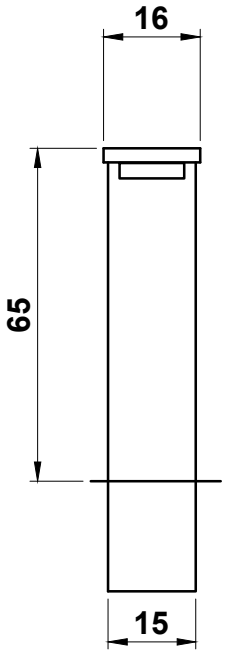  | 1 | each | ACDV737<br>ACDV738<br>ACW20465<br>W20124<br>W20129 | MF ✓<br>SA<br>KL<br>HP<br>SSC<br>SMC<br>W<br>Z<br>PC |
| 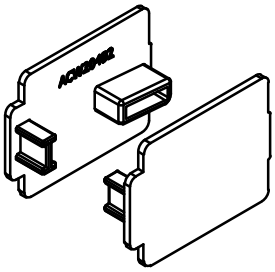 | **ACW20492**<br><br>**End Cap for W20492** | 10 | pack | W20492 | MF<br>SA<br>KL<br>HP<br>SSC<br>SMC<br>W<br>Z ✓<br>PC |

T-BARS
ACVG65=2.5mm
ACVG66=3.0mm
ACVL150=4.0mm

Screw (Grub)

| | | | |
|---|---|---|---|
| MF | = Mill Finish | W | = White |
| SA | = Silver Anodised | Z | = Black |
| KL | = Basic Colour | | |
| HP | = Special Colour | | |
| SSC | = Smooth Satin Chrome | | |
| SMC | = Smokey Chrome | | |
| PC | = Polished Chrome | | |

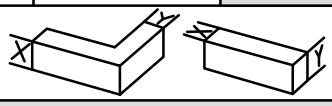

| Image | Part Code | Pack | Unit | Application | Colour |
|---|---|---|---|---|---|
| 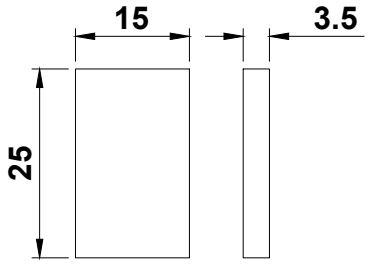 | **ACW20494**<br>**Meeting Stile Packer** | **50** | **pack** | **W20046**<br>**W20149** | MF<br>SA<br>KL<br>HP<br>SSC<br>SMC<br>W<br>Z ✓<br>PC |
| 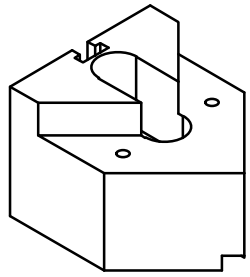 | **ACW906**<br>**Vee Block** | **1** | **each** | **W20027**<br>**W20127**<br>**W20125N** | MF ✓<br>SA<br>KL<br>HP<br>SSC<br>SMC<br>W<br>Z<br>PC |
| 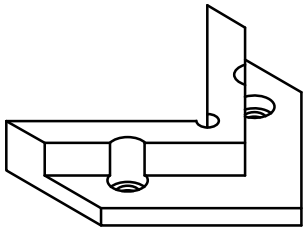 | **ACW907**<br>**5.6mm Tufnel Packer** | **1** | **each** | **W20015**<br>**W20016**<br>**W20024**<br>**W20125N**<br>**W20127** | MF ✓<br>SA<br>KL<br>HP<br>SSC<br>SMC<br>W<br>Z<br>PC |
| 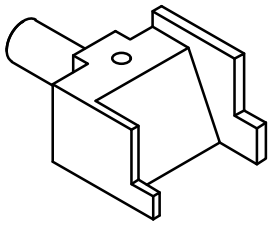 | **ACW910N**<br>**Punches** | **1** | **pair** | **W20027**<br>**W20127** | MF ✓<br>SA<br>KL<br>HP<br>SSC<br>SMC<br>W<br>Z<br>PC |
| 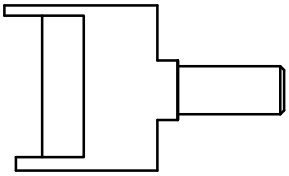 | **ACW914**<br>**Punches** | **1** | **pair** | **W20125N** | MF ✓<br>SA<br>KL<br>HP<br>SSC<br>SMC<br>W<br>Z<br>PC |

T-BARS
ACVG65=2.5mm
ACVG66=3.0mm
ACVL150=4.0mm

Screw (Grub)

| | | | |
|---|---|---|---|
| **MF** | **= Mill Finish** | **W** | **= White** |
| **SA** | **= Silver Anodised** | **Z** | **= Black** |
| **KL** | **= Basic Colour** | | |
| **HP** | **= Special Colour** | | |
| **SSC** | **= Smooth Satin Chrome** | | |
| **SMC** | **= Smokey Chrome** | | |
| **PC** | **= Polished Chrome** | | |

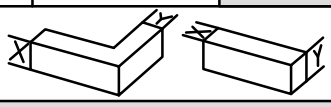

| Image | Part Code | Pack | Unit | Application | Colour |
|---|---|---|---|---|---|
| 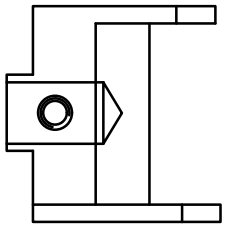 | **ACW923**<br>**Punches** | **1** | **pair** | **W20129** | MF ✓<br>SA<br>KL<br>HP<br>SSC<br>SMC<br>W<br>Z<br>PC |
| 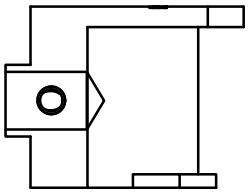 | **ACW924**<br>**Punches** | **1** | **pair** | **W20124** | MF ✓<br>SA<br>KL<br>HP<br>SSC<br>SMC<br>W<br>Z<br>PC |
| 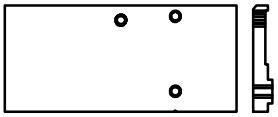 | **ACW925**<br>**Door Drill Jig**<br>**(Must be clamped in position)** | **1** | **each** | **W20038**<br>**W20138** | MF ✓<br>SA<br>KL<br>HP<br>SSC<br>SMC<br>W<br>Z<br>PC |
| 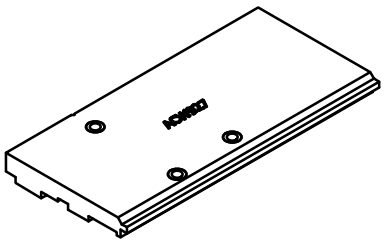 | **ACW927**<br>**Door Drill Jig**<br>**(Must be clamped in position)** | **1** | **each** | **W20124**<br>**W20135** | MF ✓<br>SA<br>KL<br>HP<br>SSC<br>SMC<br>W<br>Z<br>PC |
| 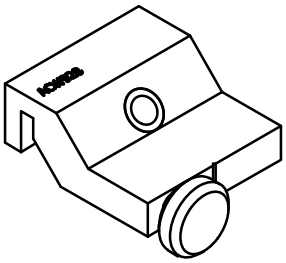 | **ACW928**<br>**Drainage Drill Jig** | **1** | **each** | **W20124**<br>**W20129** | MF ✓<br>SA<br>KL<br>HP<br>SSC<br>SMC<br>W<br>Z<br>PC |

T-BARS
ACVG65=2.5mm
ACVG66=3.0mm
ACVL150=4.0mm

Screw (Grub)

**MF = Mill Finish**
**SA = Silver Anodised**
**KL = Basic Colour**
**HP = Special Colour**
**SSC = Smooth Satin Chrome**
**SMC = Smokey Chrome**
**PC = Polished Chrome**
**W = White**
**Z = Black**

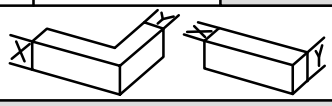

# Alitherm Heritage Door

## STANDARD ACCESSORIES

| Image | Part Code | Pack | Unit | Application | Colour | |
|---|---|---|---|---|---|---|
| | **ACMX09700**<br>**Alu-Polish**<br>**Cleaning emulsion for aluminium oxide.** | **1** | **each** | | MF<br>SA<br>KL<br>HP<br>SSC<br>SMC<br>W<br>Z<br>PC | ✓ |
| | **ACMX09761**<br>**Maxi Gloss**<br>**Protection for painted and anodised surfaces.** | **1** | **each** | | MF<br>SA<br>KL<br>HP<br>SSC<br>SMC<br>W<br>Z<br>PC | |
| | **ACMX09762**<br>**Alu. Bright**<br>**Cleaner for rough, anodised or enamelled aluminium frames.** | **1** | **each** | | MF<br>SA<br>KL<br>HP<br>SSC<br>SMC<br>W<br>Z<br>PC | |
| 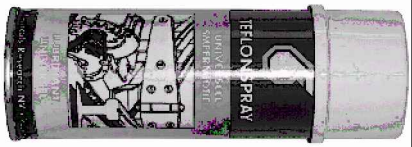  | **ACMX09763**<br>**Teflon Spray**<br>**Lubricant** | **1** | **each** | | MF<br>SA<br>KL<br>HP<br>SSC<br>SMC<br>W<br>Z<br>PC | |
| | **ACMX09764**<br>**Maxi Cleaner**<br>**For cleaning oily surfaces.** | **1** | **each** | | MF<br>SA<br>KL<br>HP<br>SSC<br>SMC<br>W<br>Z<br>PC | |

T-BARS
ACVG65=2.5mm
ACVG66=3.0mm
ACVL150=4.0mm

Screw (Grub)

| | | | |
|---|---|---|---|
| **MF** | **= Mill Finish** | **W** | **= White** |
| **SA** | **= Silver Anodised** | **Z** | **= Black** |
| **KL** | **= Basic Colour** | | |
| **HP** | **= Special Colour** | | |
| **SSC** | **= Smooth Satin Chrome** | | |
| **SMC** | **= Smokey Chrome** | | |
| **PC** | **= Polished Chrome** | | |

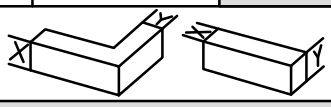




ISSUED: MAY 2021

# Alitherm Heritage Door

## STANDARD ACCESSORIES

| Image | Part Code | Pack | Unit | Application | Colour |
|---|---|---|---|---|---|
| | **ACMX09765**<br>**Glue Cleaner**<br>**De-grease and silicone remover.** | **1** | **each** | | MF<br>SA<br>KL<br>HP<br>SSC<br>SMC<br>W<br>Z<br>PC |
| | **ACMX09770**<br>**Roll & Wrap 100mm** | **1** | **each** | | MF<br>SA<br>KL<br>HP<br>SSC<br>SMC<br>W<br>Z<br>PC |
| | **ACMX09775**<br>**Grip Handwrap** | **1** | **each** | | MF<br>SA<br>KL<br>HP<br>SSC<br>SMC<br>W<br>Z<br>PC |
| 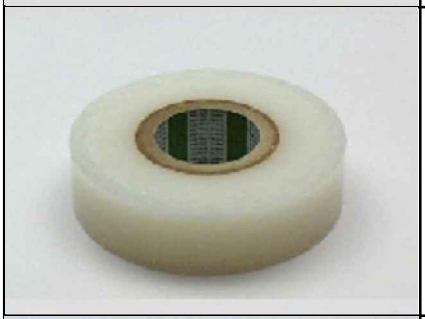 | **ACMX09801**<br>**Protective Tape 50mm** | **1** | **each** | | MF<br>SA<br>KL<br>HP<br>SSC<br>SMC<br>W<br>Z<br>PC |
| 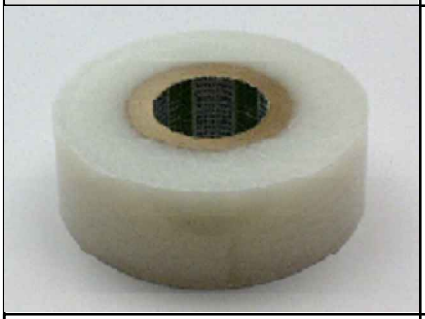 | **ACMX09802**<br>**Protective Tape 70mm** | **1** | **each** | | MF<br>SA<br>KL<br>HP<br>SSC<br>SMC<br>W<br>Z<br>PC |

T-BARS
ACVG65=2.5mm
ACVG66=3.0mm
ACVL150=4.0mm

Screw (Grub)

| | | | |
|---|---|---|---|
| **MF** | **= Mill Finish** | **W** | **= White** |
| **SA** | **= Silver Anodised** | **Z** | **= Black** |
| **KL** | **= Basic Colour** | | |
| **HP** | **= Special Colour** | | |
| **SSC** | **= Smooth Satin Chrome** | | |
| **SMC** | **= Smokey Chrome** | | |
| **PC** | **= Polished Chrome** | | |

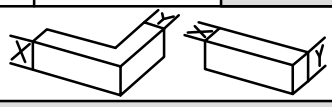

# Alitherm Heritage Door

## STANDARD ACCESSORIES

| Image | Part Code | Pack | Unit | Application | Colour | |
|---|---|---|---|---|---|---|
| 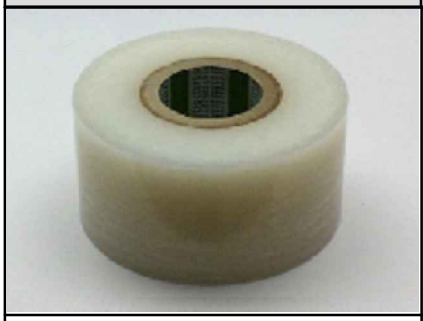 | **ACMX09803**<br><br>**Protective Tape 100mm** | **1** | **each** | | MF | |
| | | | | | SA | |
| | | | | | KL | |
| | | | | | HP | |
| | | | | | SSC | |
| | | | | | SMC | |
| | | | | | W | |
| | | | | | Z | |
| | | | | | PC | |
| | **ACSIL05**<br><br>**Rubber Sealant** | **1** | **each** | | MF | |
| | | | | | SA | |
| | | | | | KL | |
| | | | | | HP | |
| | | | | | SSC | |
| | | | | | SMC | |
| | | | | | W | |
| | | | | | Z | |
| | | | | | PC | |
| | **ACSIL04**<br><br>**Sealing Glue**<br>**Order with suffix of KL colour (eg.ACSIL04KL005) or BL=Black/WP=White/ CL=Clear** | **1** | **each** | | MF | |
| | | | | | SA | |
| | | | | | KL | ✓ |
| | | | | | HP | |
| | | | | | SSC | |
| | | | | | SMC | |
| | | | | | W | ✓ |
| | | | | | Z | ✓ |
| | | | | | PC | |
| | **ACSIL08**<br><br>**Silicon Gun** | **1** | **each** | | MF | |
| | | | | | SA | |
| | | | | | KL | |
| | | | | | HP | |
| | | | | | SSC | |
| | | | | | SMC | |
| | | | | | W | |
| | | | | | Z | |
| | | | | | PC | |
| | **ACSIL013**<br><br>**Glue for Mitre** | **1** | **each** | | MF | |
| | | | | | SA | |
| | | | | | KL | |
| | | | | | HP | |
| | | | | | SSC | |
| | | | | | SMC | |
| | | | | | W | |
| | | | | | Z | |
| | | | | | PC | |

T-BARS
ACVG65=2.5mm
ACVG66=3.0mm
ACVL150=4.0mm

Screw (Grub)

**MF = Mill Finish**
**SA = Silver Anodised**
**KL = Basic Colour**
**HP = Special Colour**
**SSC = Smooth Satin Chrome**
**SMC = Smokey Chrome**
**PC = Polished Chrome**
**W = White**
**Z = Black**

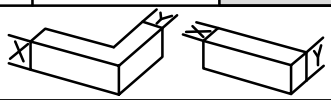




ISSUED: MAY 2021

# Alitherm Heritage Door

## STANDARD ACCESSORIES

| Image | Part Code | Pack | Unit | Application | Colour | |
|---|---|---|---|---|---|---|
| | **ACSIL014**<br>**Anti-Corrosion Coating** | **1** | **each** | | MF | ✓ |
| | | | | | SA | |
| | | | | | KL | |
| | | | | | HP | |
| | | | | | SSC | |
| | | | | | SMC | |
| | | | | | W | |
| | | | | | Z | |
| | | | | | PC | |
| | **ACUN3900**<br>**Gasket Roller** | **1** | **Each** | **Wedge Gaskets** | MF | |
| | | | | | SA | |
| | | | | | KL | |
| | | | | | HP | |
| | | | | | SSC | |
| | | | | | SMC | |
| | | | | | W | |
| | | | | | Z | |
| | | | | | PC | |
| | | | | | MF | |
| | | | | | SA | |
| | | | | | KL | |
| | | | | | HP | |
| | | | | | SSC | |
| | | | | | SMC | |
| | | | | | W | |
| | | | | | Z | |
| | | | | | PC | |
| | | | | | MF | |
| | | | | | SA | |
| | | | | | KL | |
| | | | | | HP | |
| | | | | | SSC | |
| | | | | | SMC | |
| | | | | | W | |
| | | | | | Z | |
| | | | | | PC | |
| | | | | | MF | |
| | | | | | SA | |
| | | | | | KL | |
| | | | | | HP | |
| | | | | | SSC | |
| | | | | | SMC | |
| | | | | | W | |
| | | | | | Z | |
| | | | | | PC | |

T-BARS
ACVG65=2.5mm
ACVG66=3.0mm
ACVL150=4.0mm

Screw (Grub)

| | | | |
|---|---|---|---|
| **MF** | **= Mill Finish** | **W** | **= White** |
| **SA** | **= Silver Anodised** | **Z** | **= Black** |
| **KL** | **= Basic Colour** | | |
| **HP** | **= Special Colour** | | |
| **SSC** | **= Smooth Satin Chrome** | | |
| **SMC** | **= Smokey Chrome** | | |
| **PC** | **= Polished Chrome** | | |

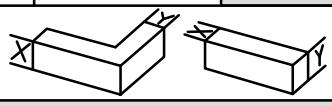

# Section C

## Sections

## Scale Elevations

## Open Out Doors

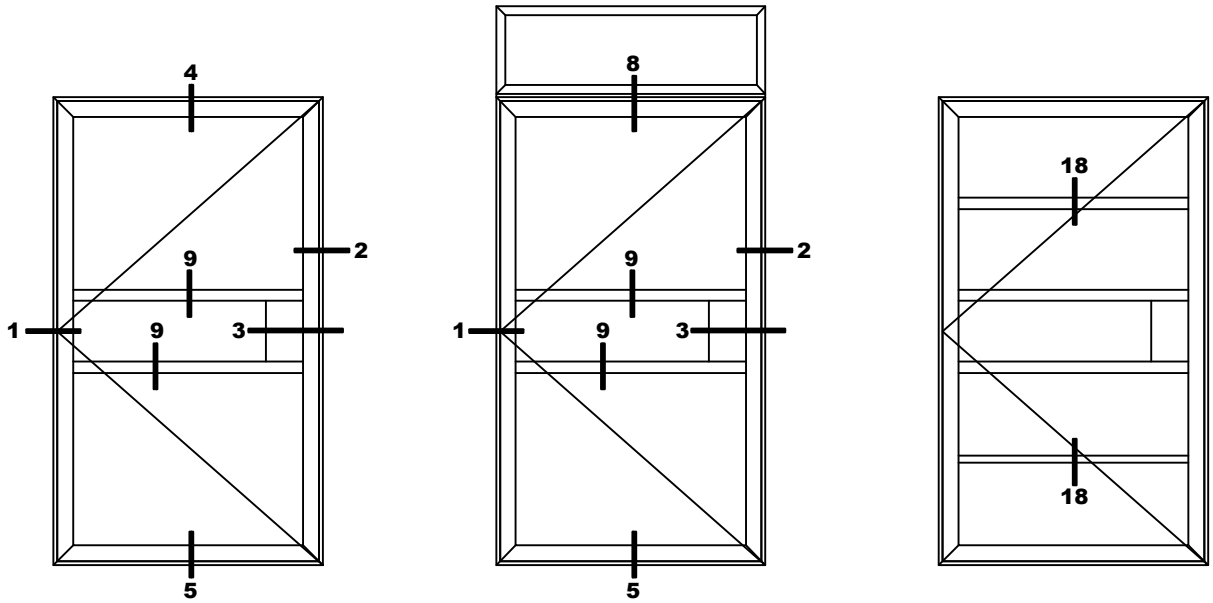


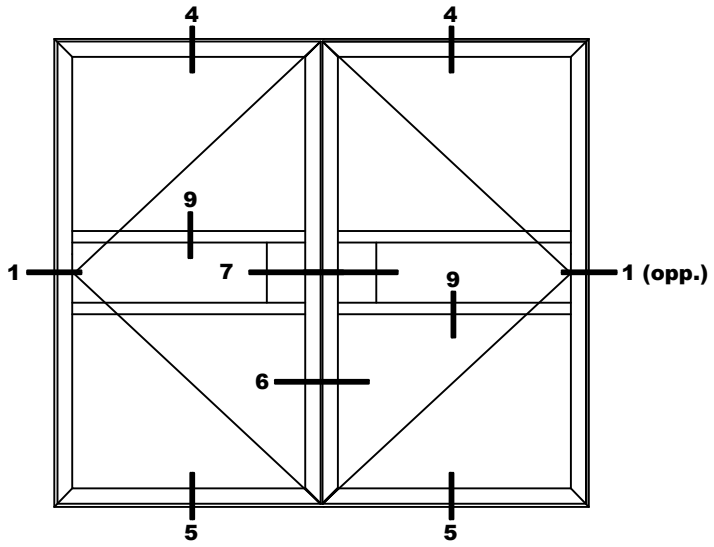


**Note: For open out PAS24 doors, please turn to page C42.**

Do Not Scale From This Drawing

# Alitherm Heritage Door

## Detail 1A

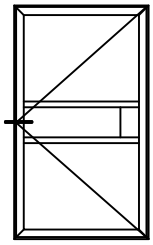

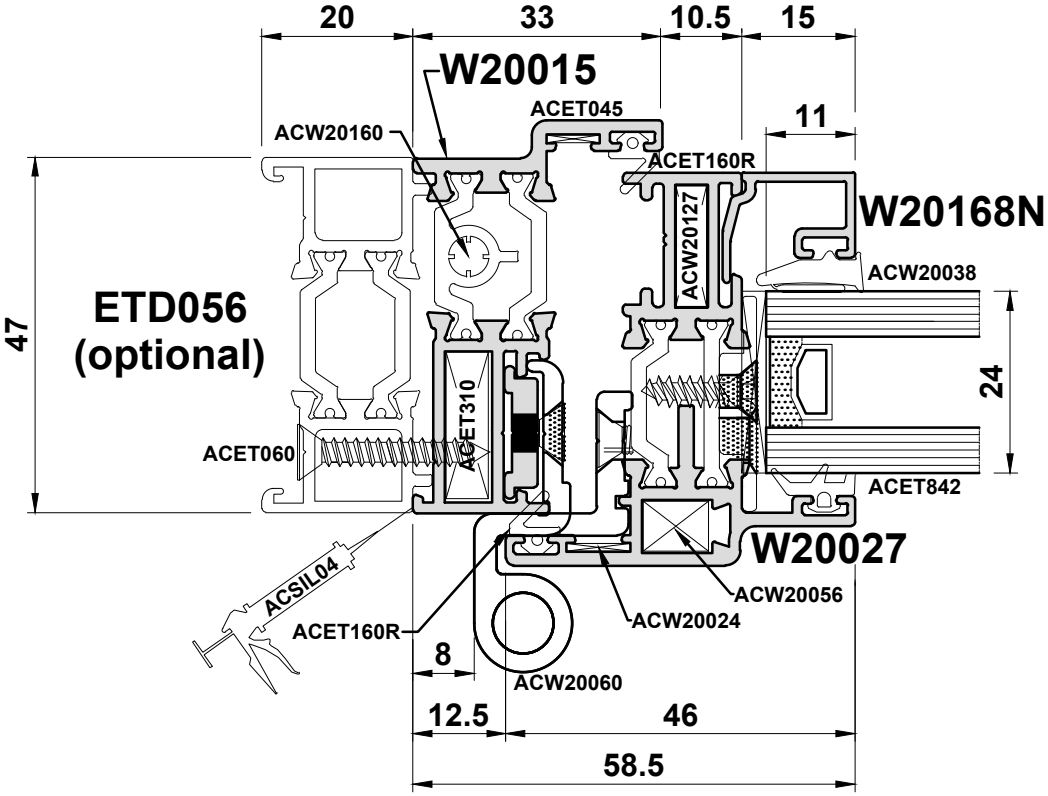


Do Not Scale From This Drawing

## Detail 1B

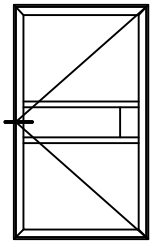

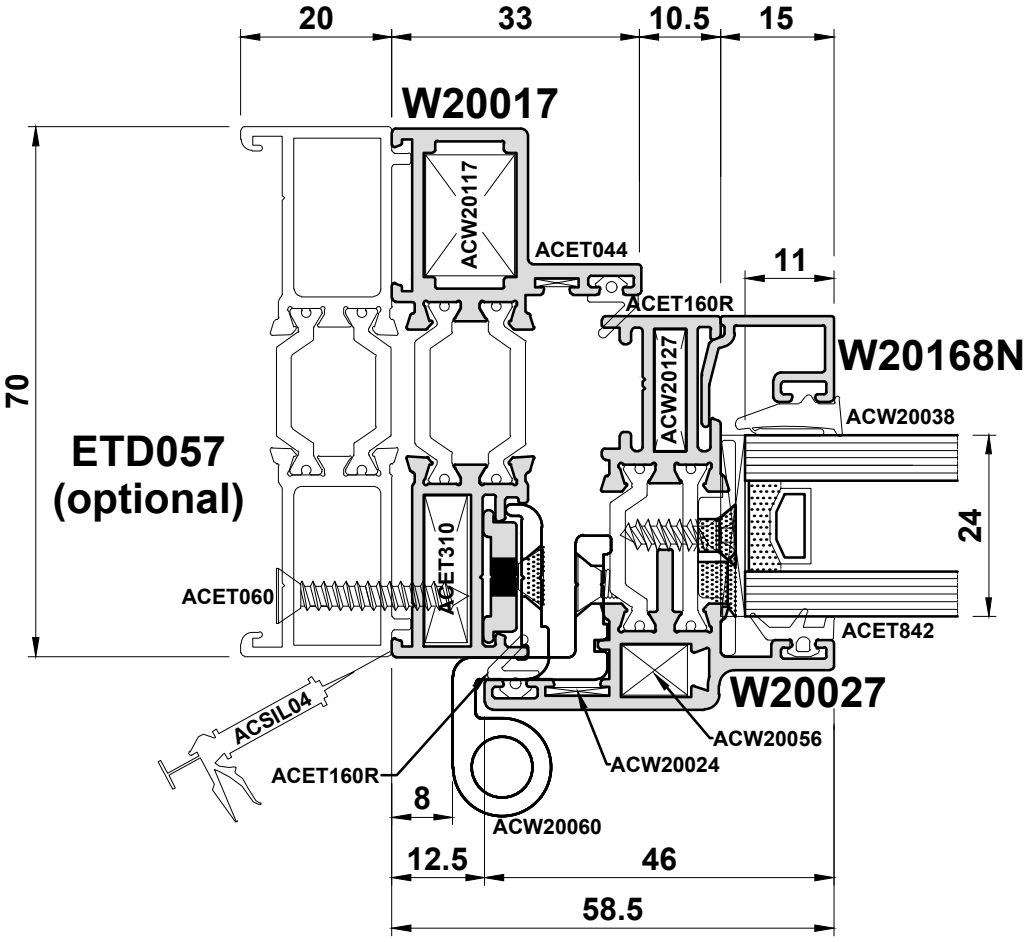


Do Not Scale From This Drawing

# Detail 2A

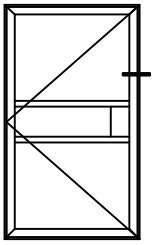

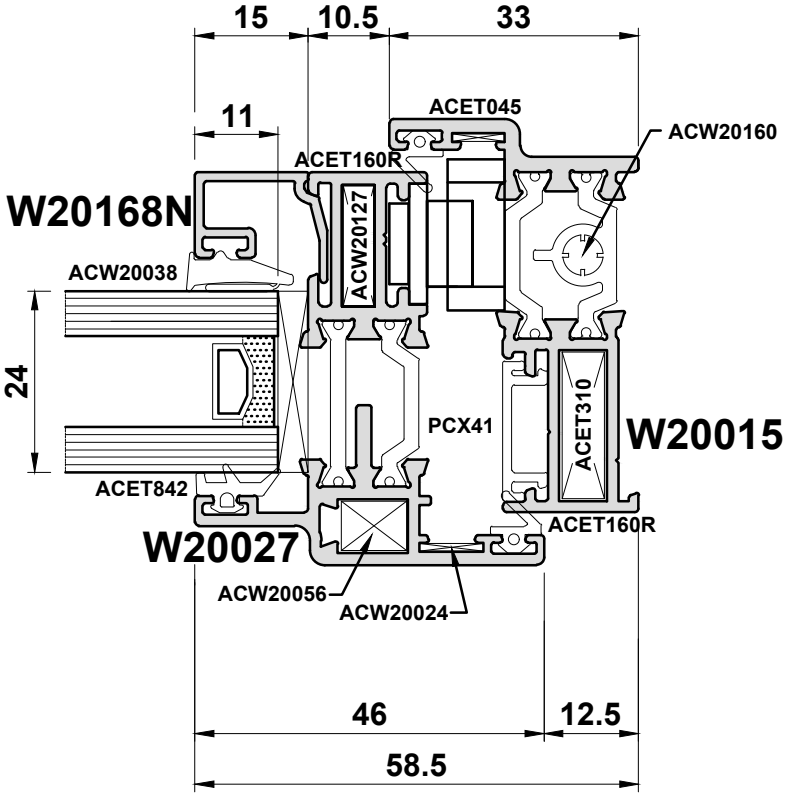


Do Not Scale From This Drawing

## Detail 2B

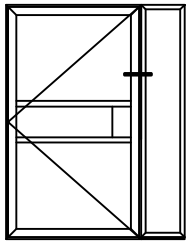

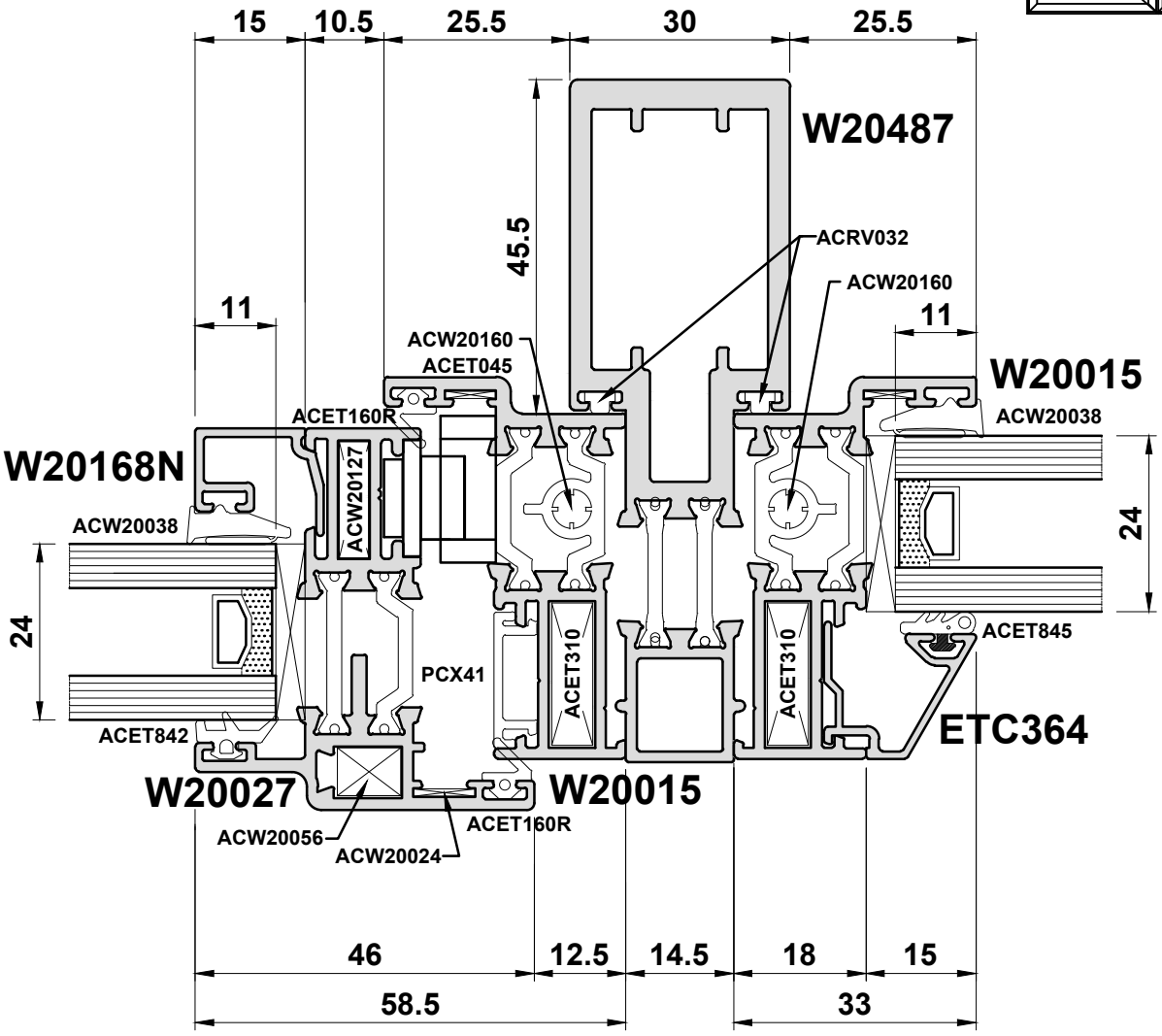


Do Not Scale From This Drawing

# Alitherm Heritage Door

## Detail 2C

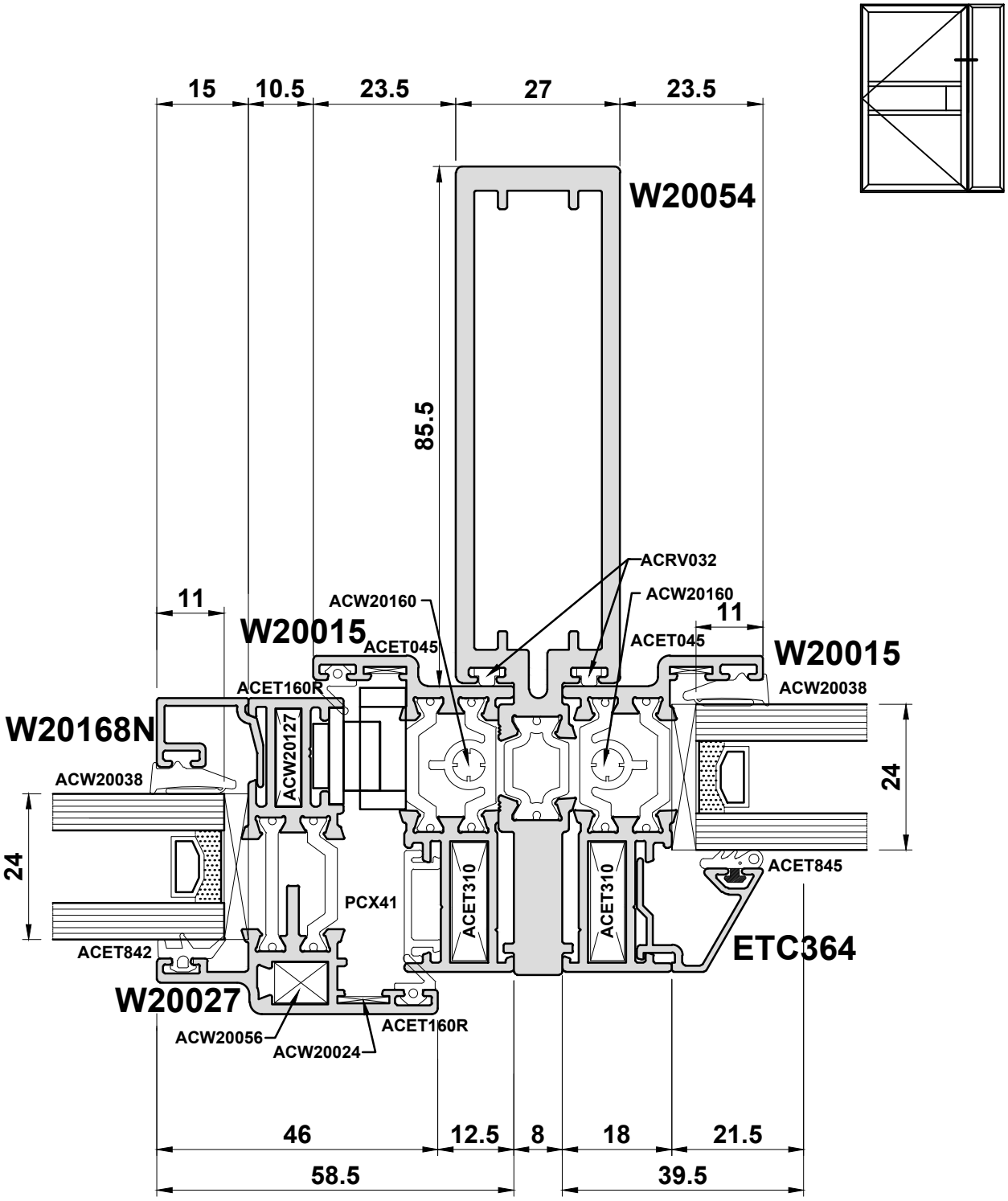


Do Not Scale From This Drawing

## Detail 3A

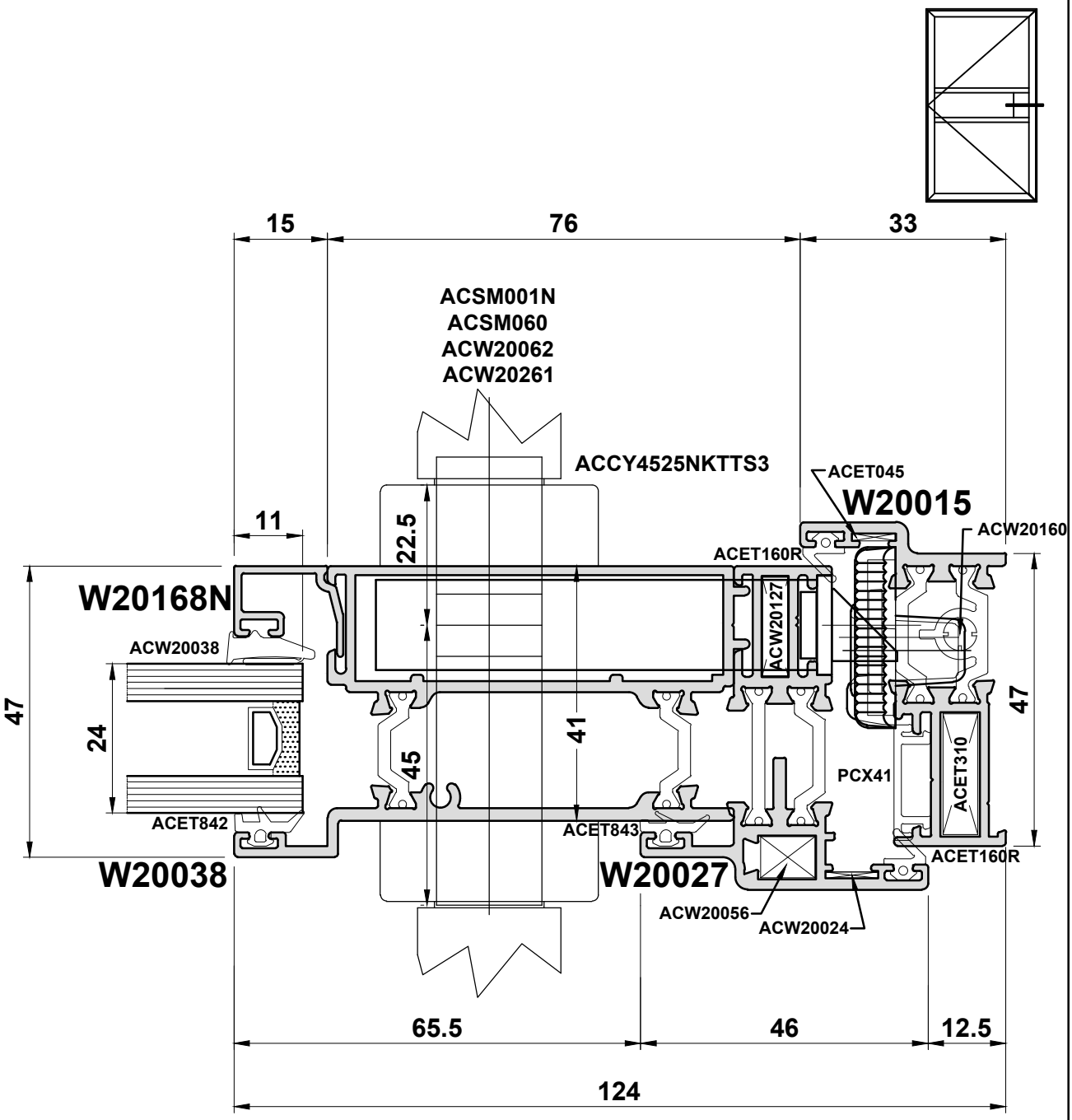


Do Not Scale From This Drawing

## Detail 3B

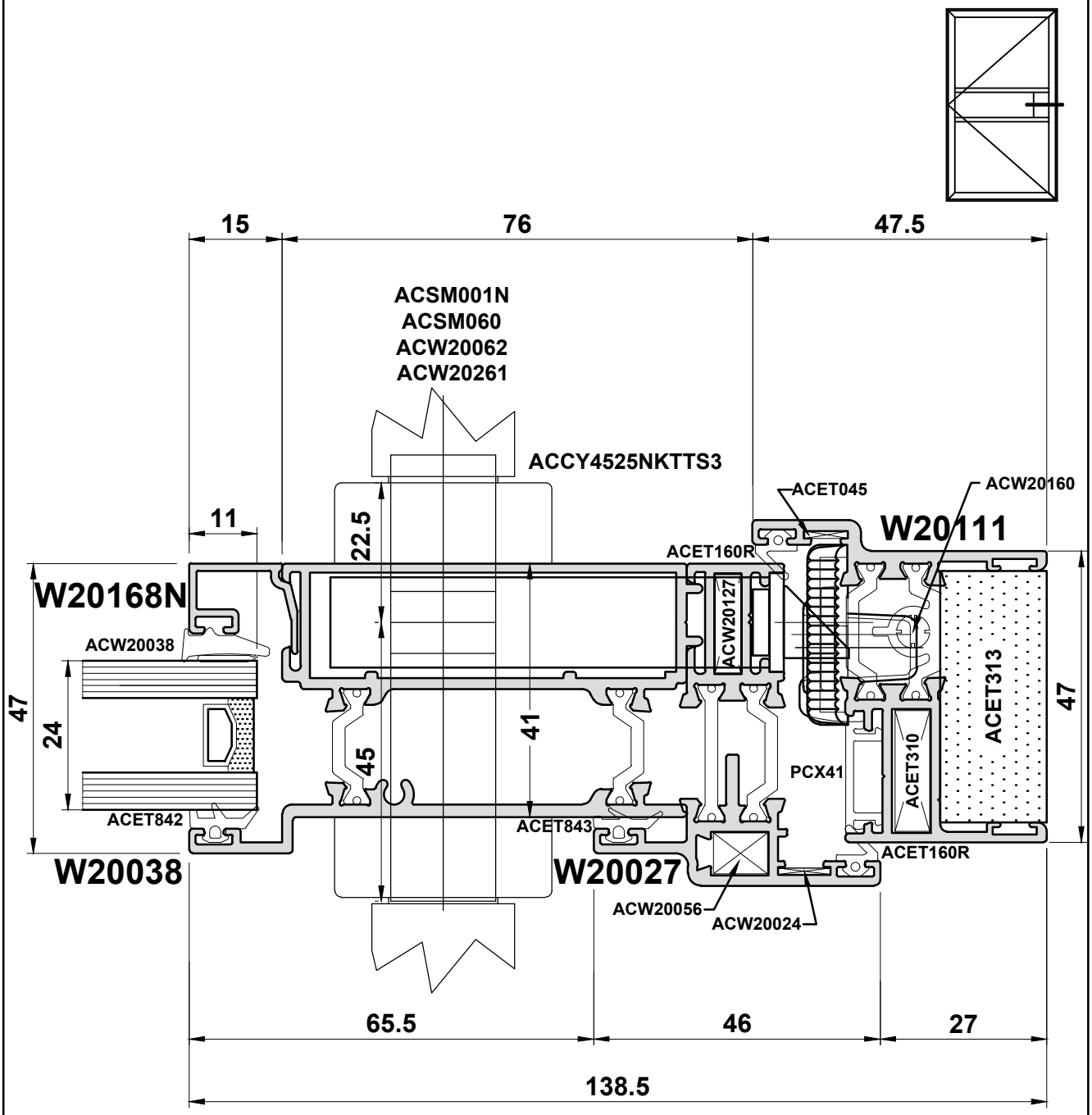


Do Not Scale From This Drawing

# Detail 4A

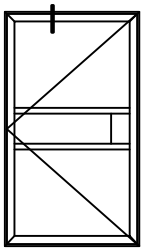

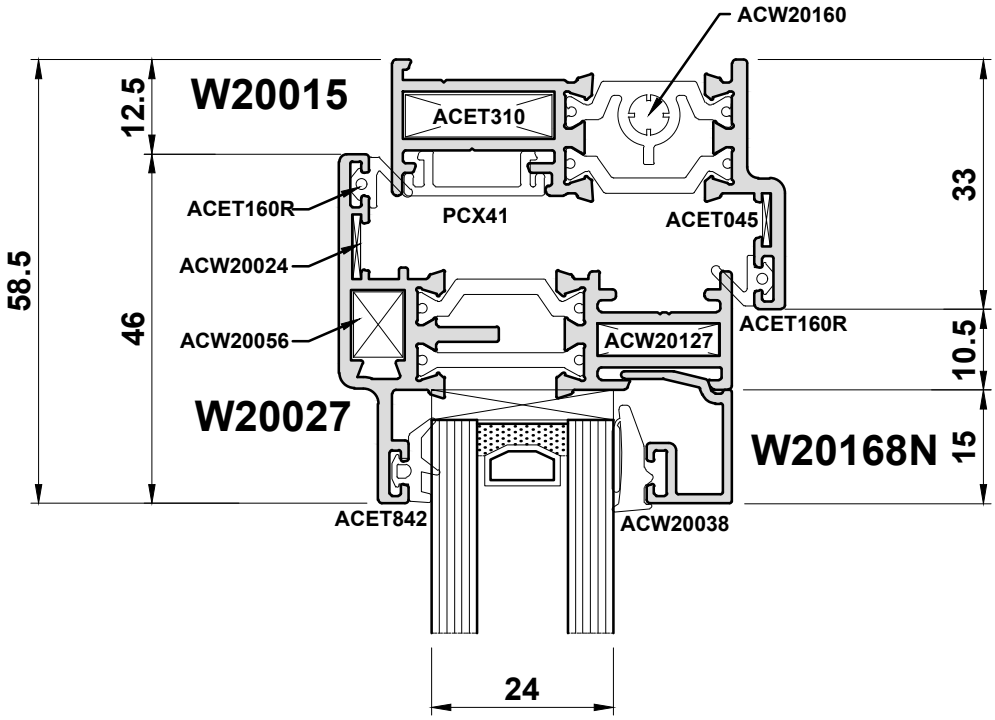


Do Not Scale From This Drawing

# Detail 4B

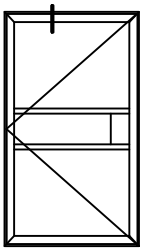

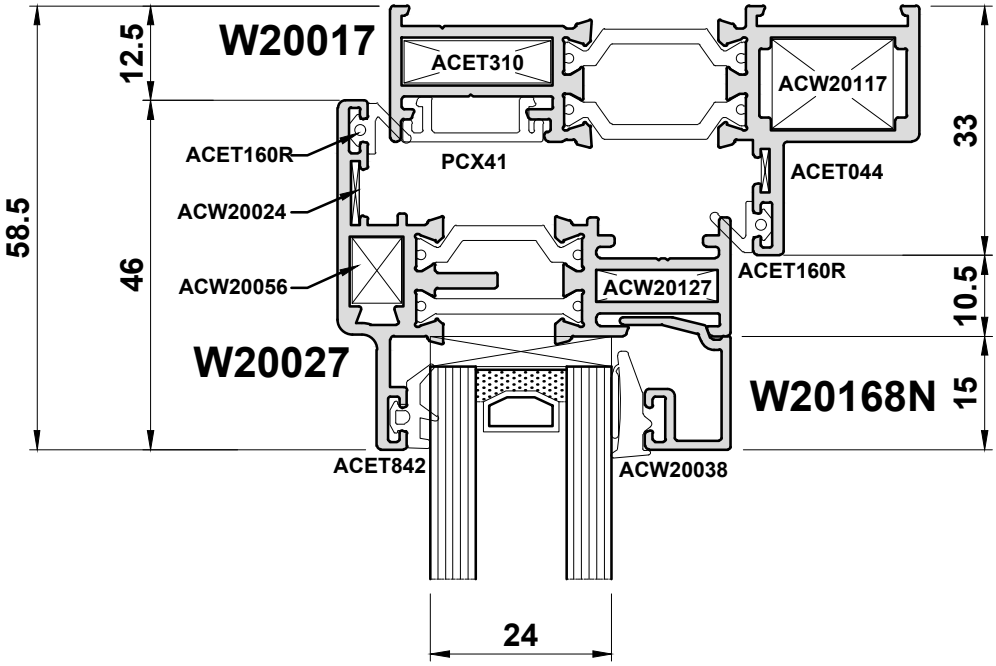


Do Not Scale From This Drawing

# Detail 4C

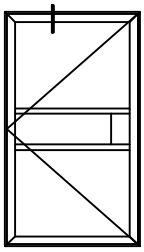

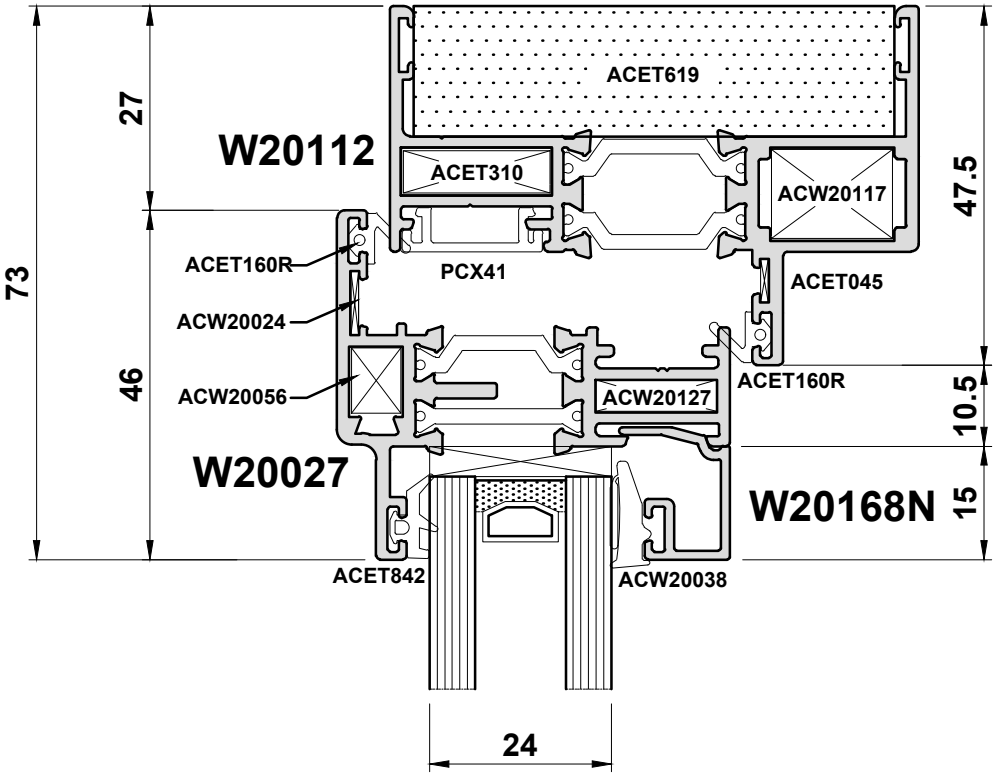


Do Not Scale From This Drawing

# Alitherm Heritage Door

## Detail 5A

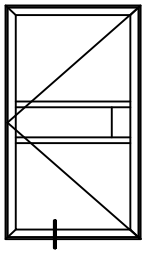

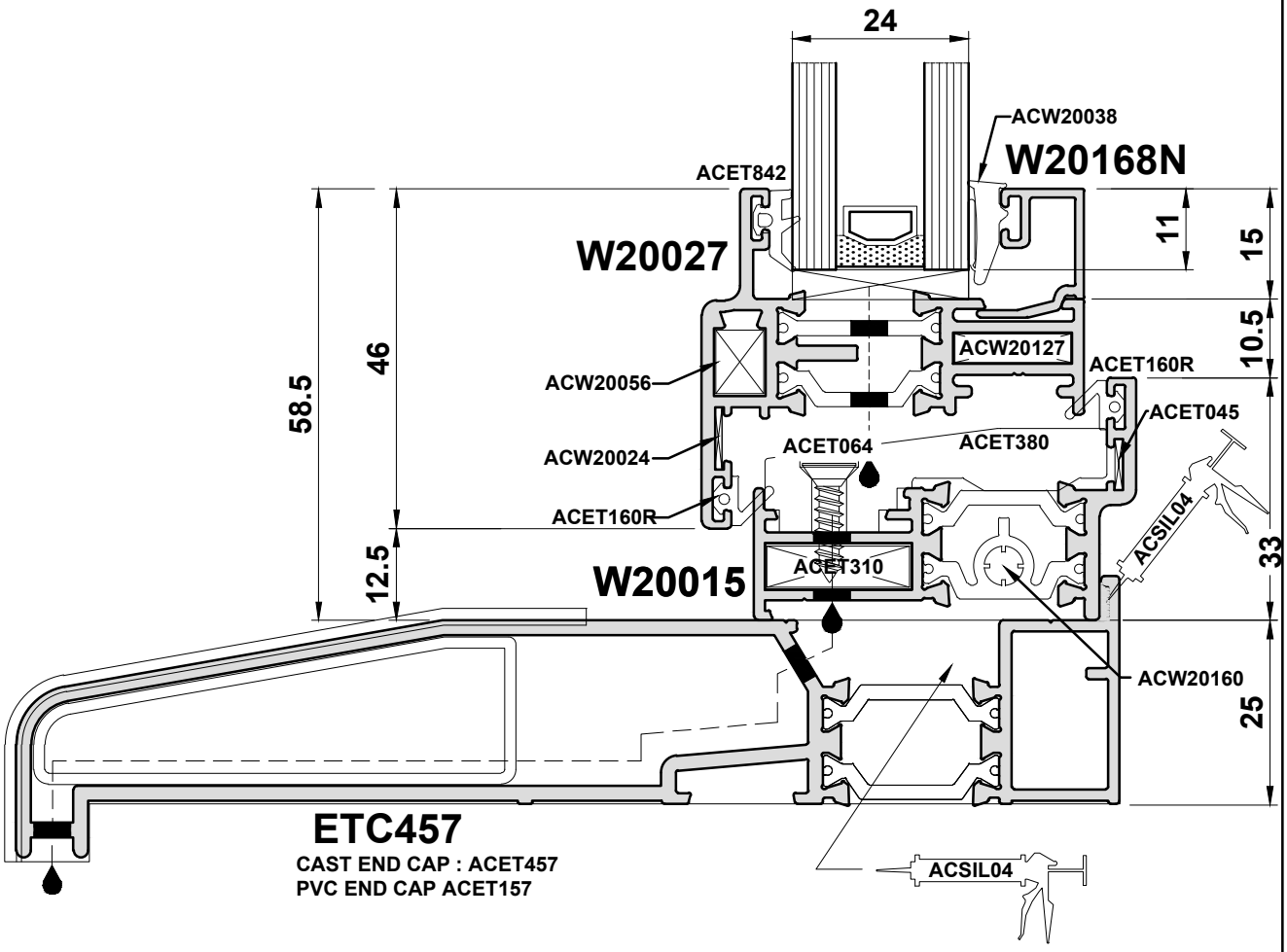


**Do Not Scale From This Drawing**

## Detail 5B

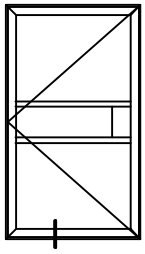

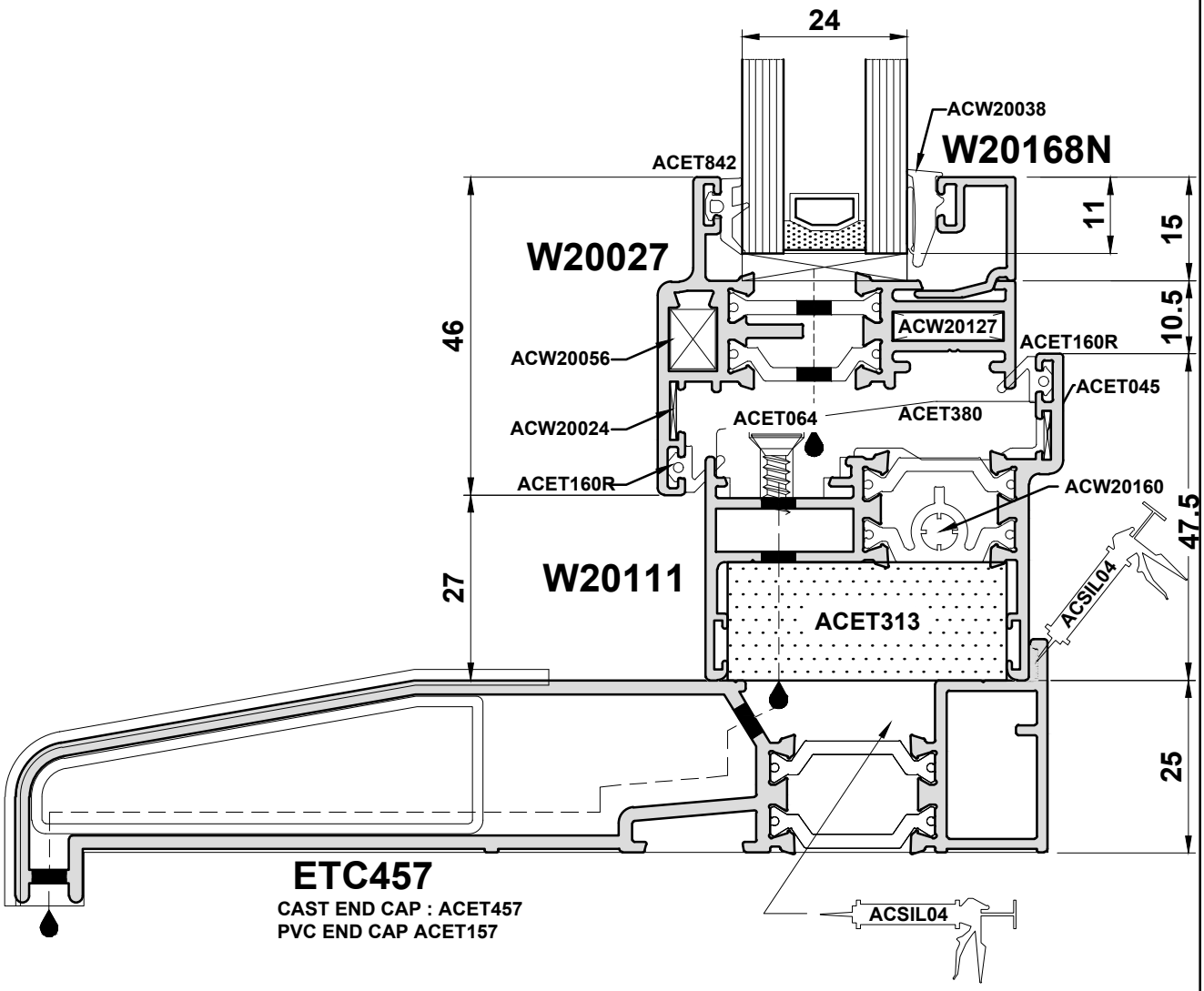


**Do Not Scale From This Drawing**

## Detail 5C

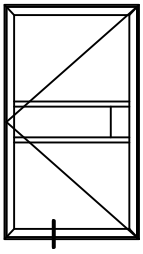

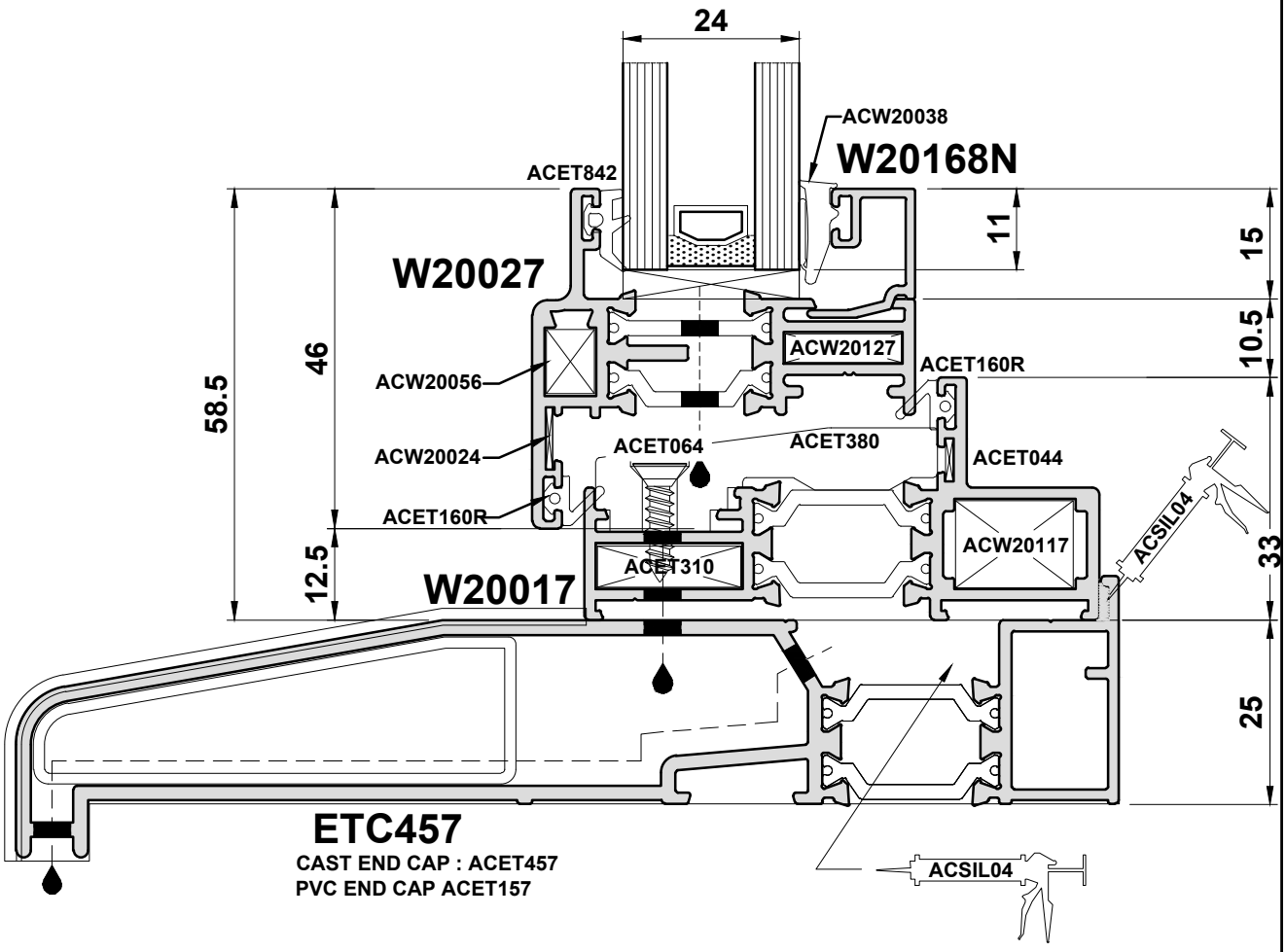


**Do Not Scale From This Drawing**

# Detail 6

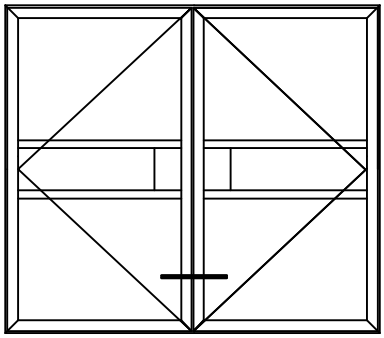

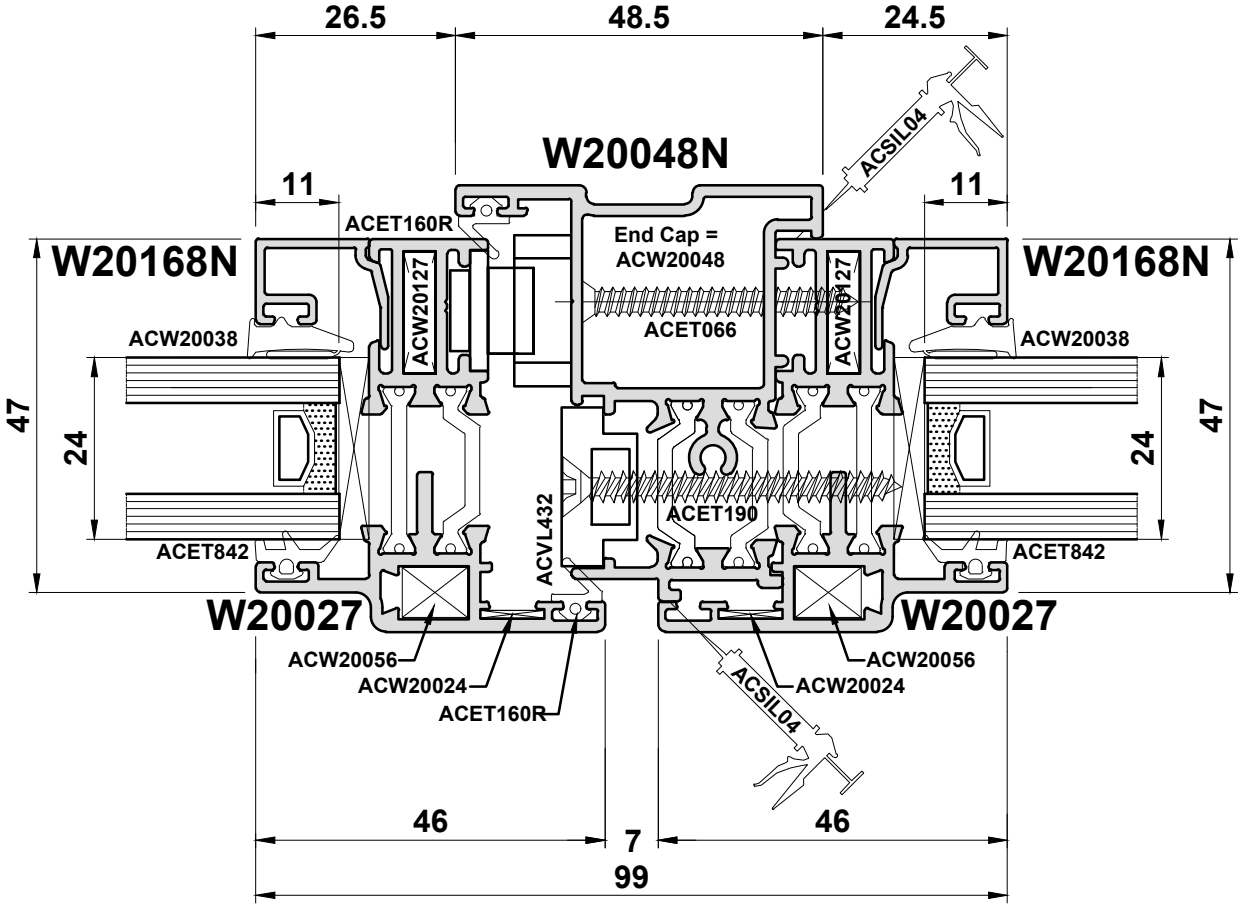


Do Not Scale From This Drawing

# Alitherm Heritage Door

## Detail 7

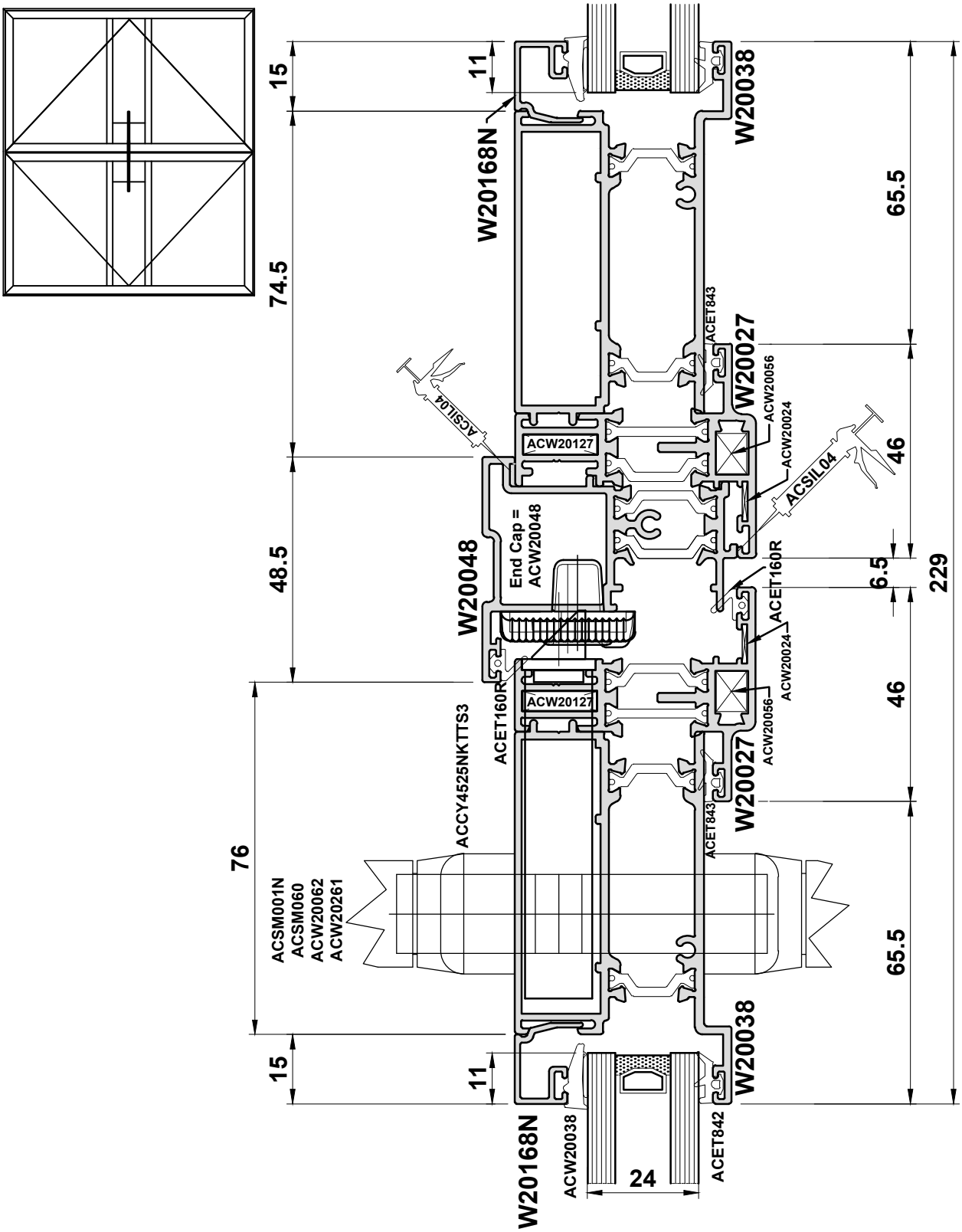


Do Not Scale From This Drawing

## Detail 8A

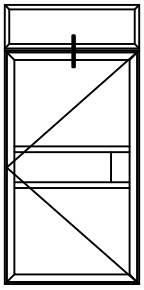

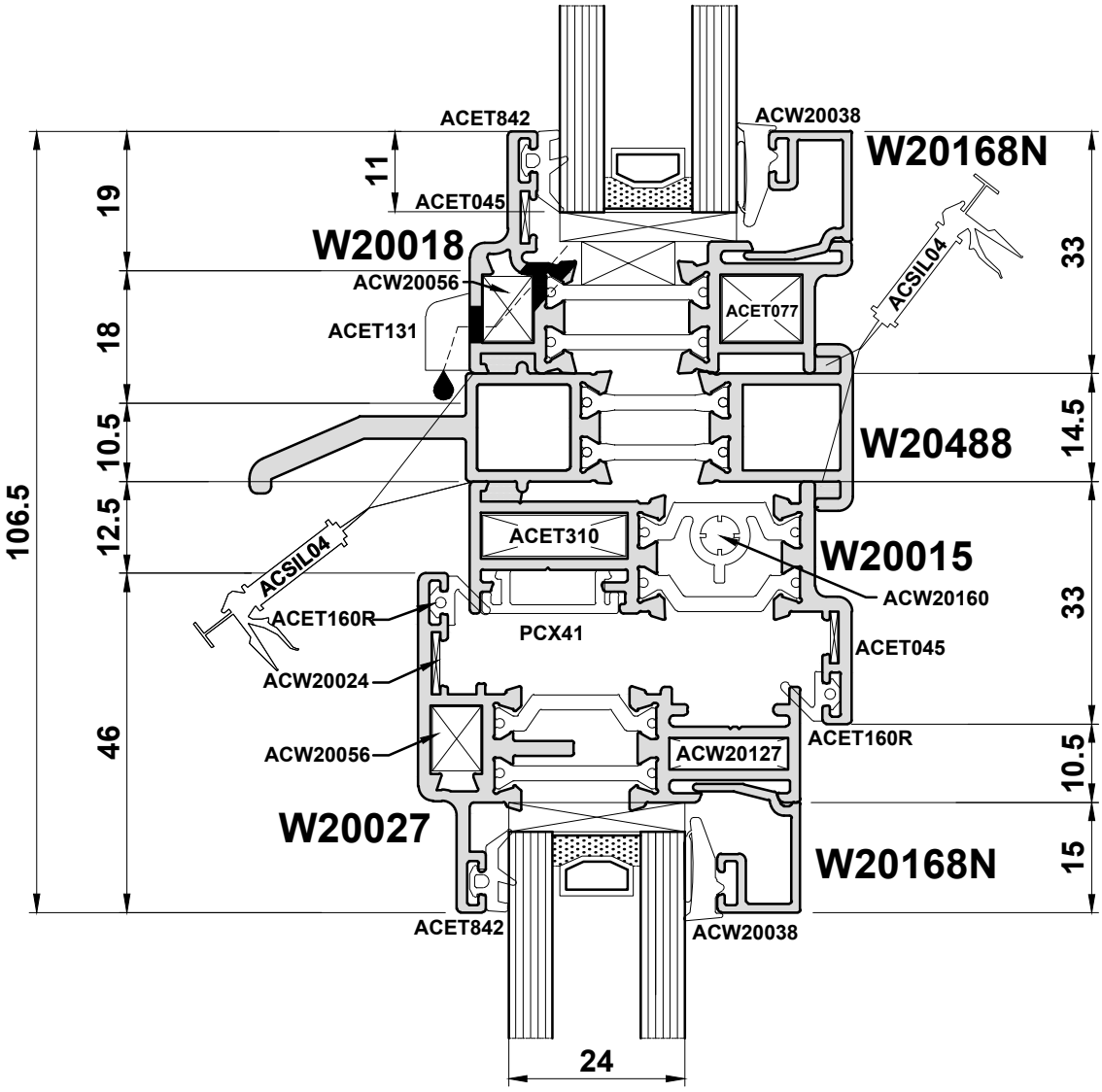


Do Not Scale From This Drawing

# Alitherm Heritage Door

## Detail 8B

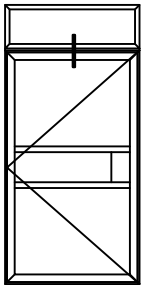

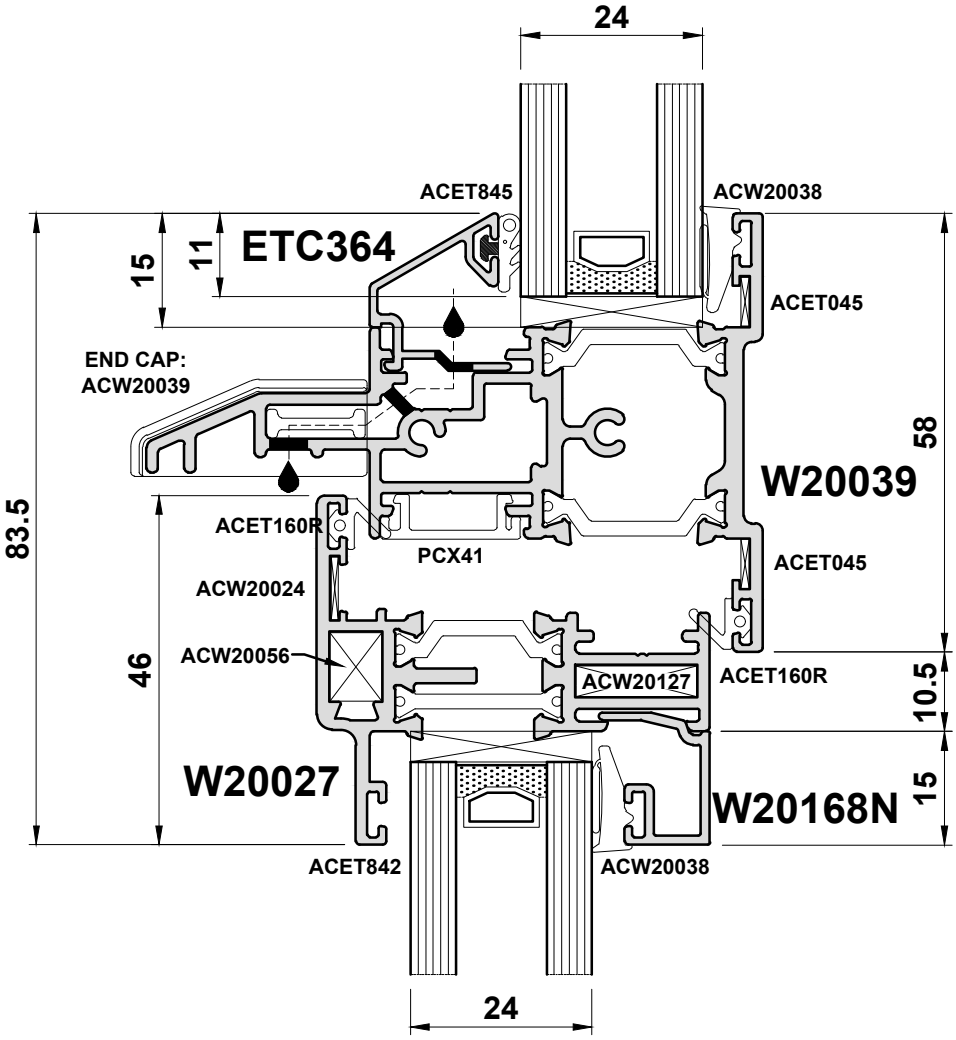


Do Not Scale From This Drawing

## Detail 8C

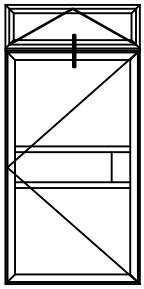

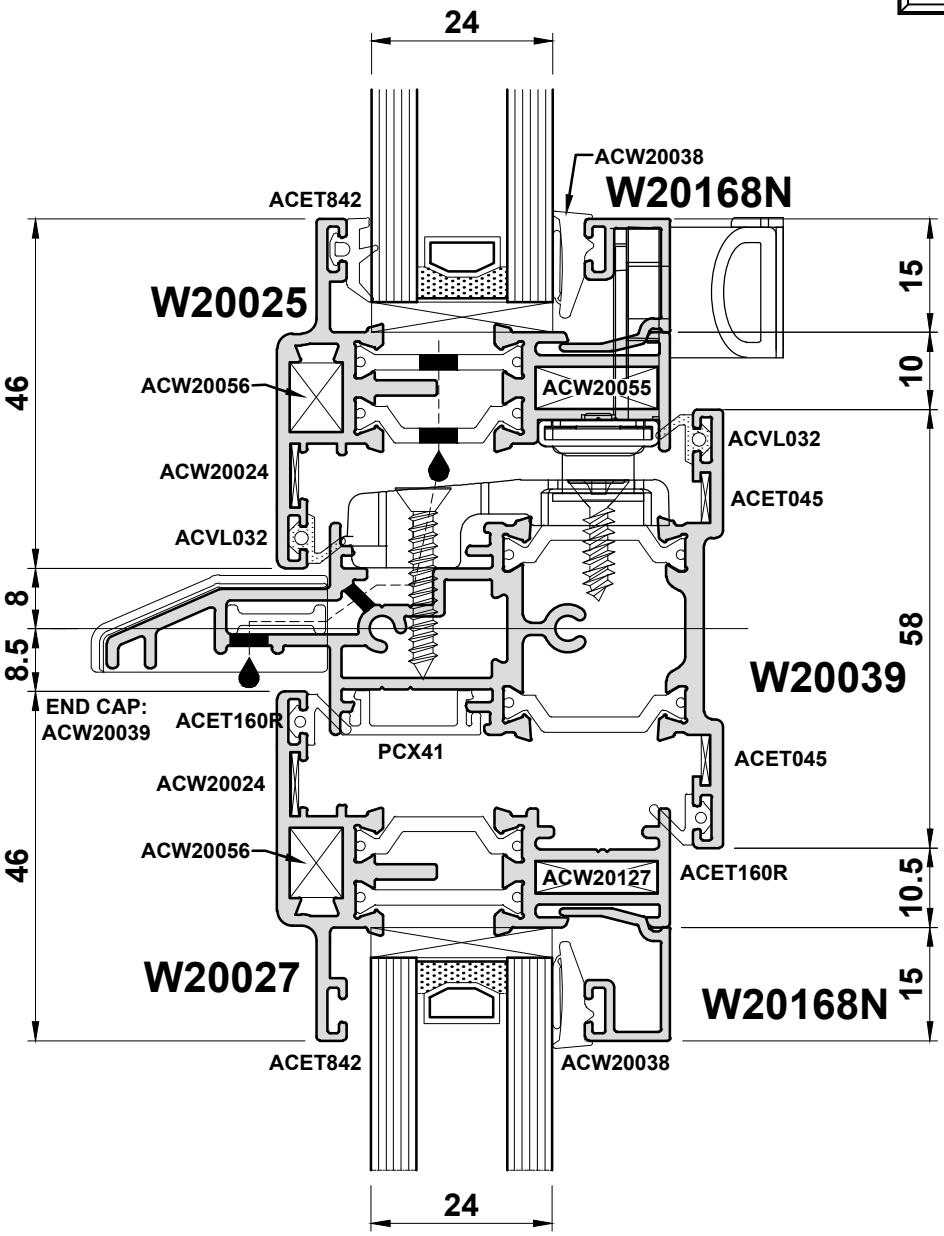


Do Not Scale From This Drawing

# Alitherm Heritage Door

## Detail 9

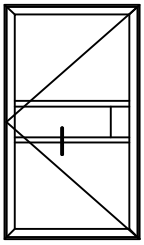

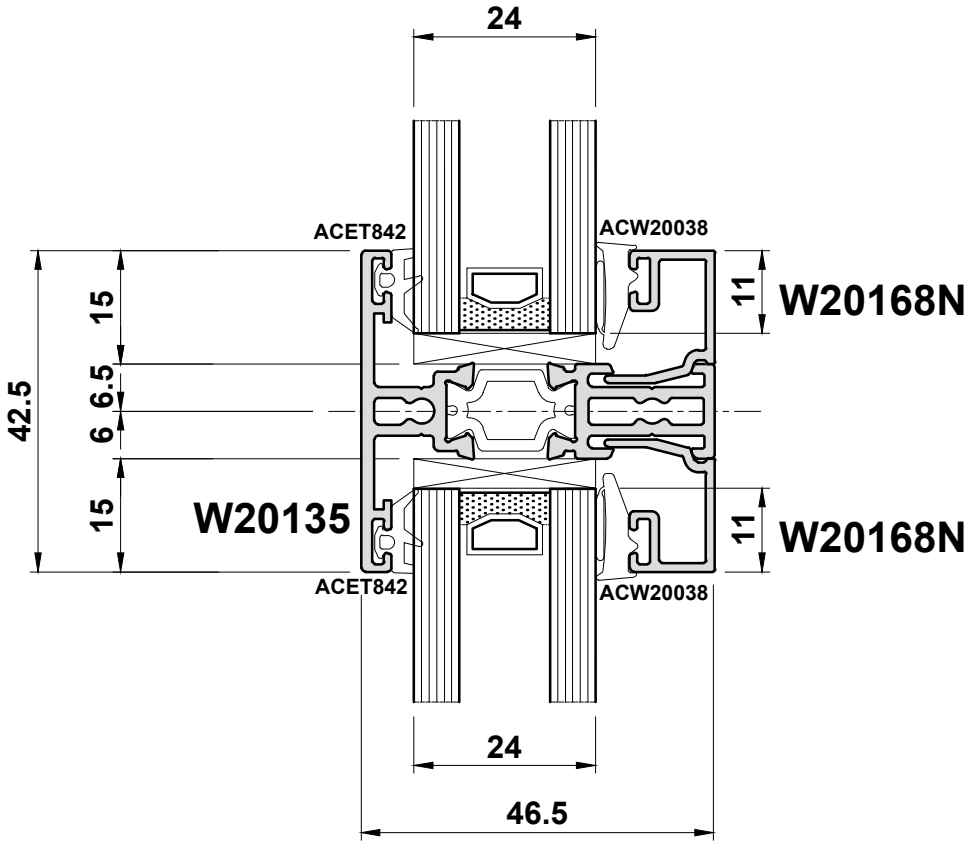


**Note:** Transoms will drain through the join to the sash.

**Do Not Scale From This Drawing**

## Open In Doors

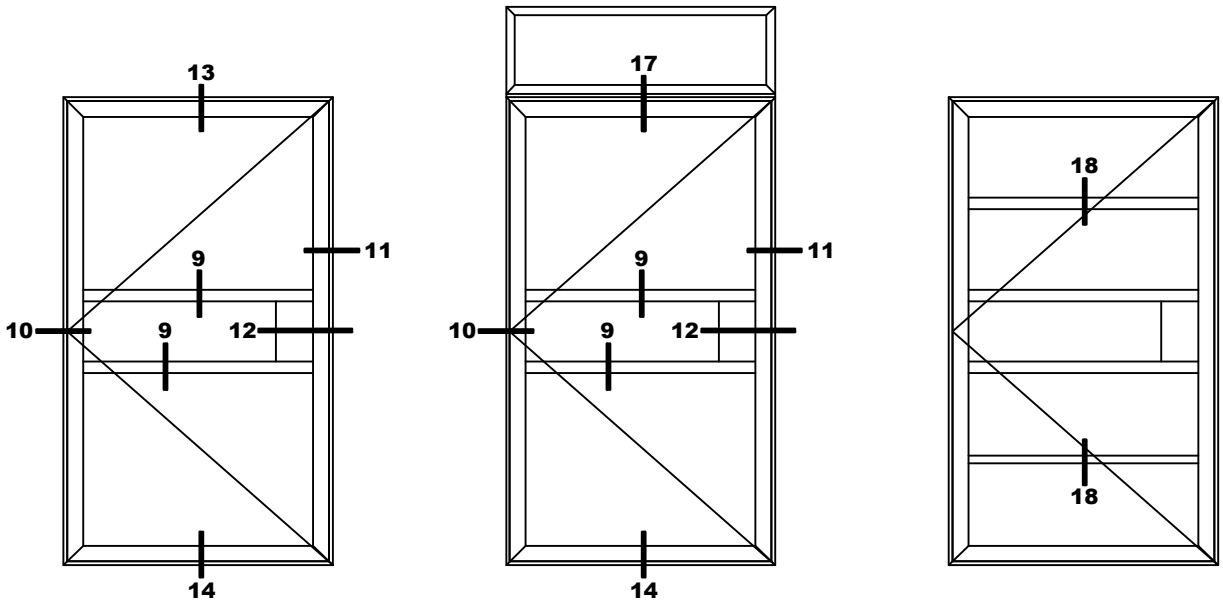


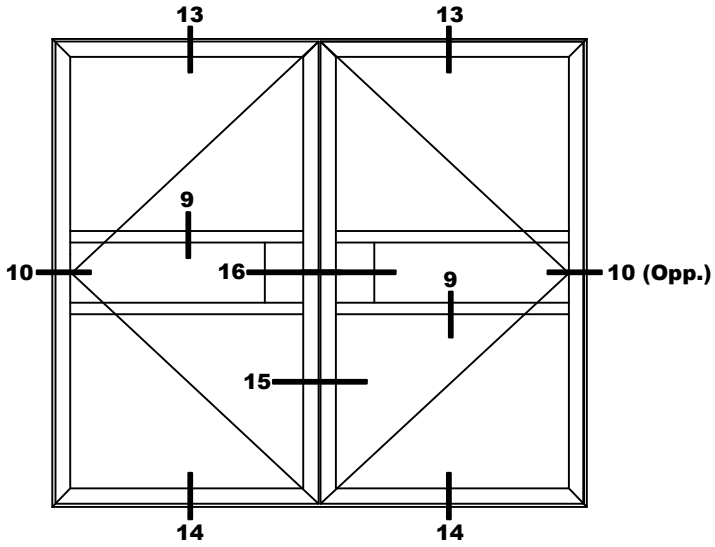


**Note: For open in PAS24 doors, please turn to page C69.**

Do Not Scale From This Drawing

## Detail 10A

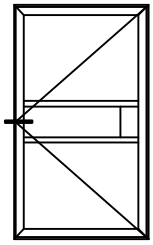

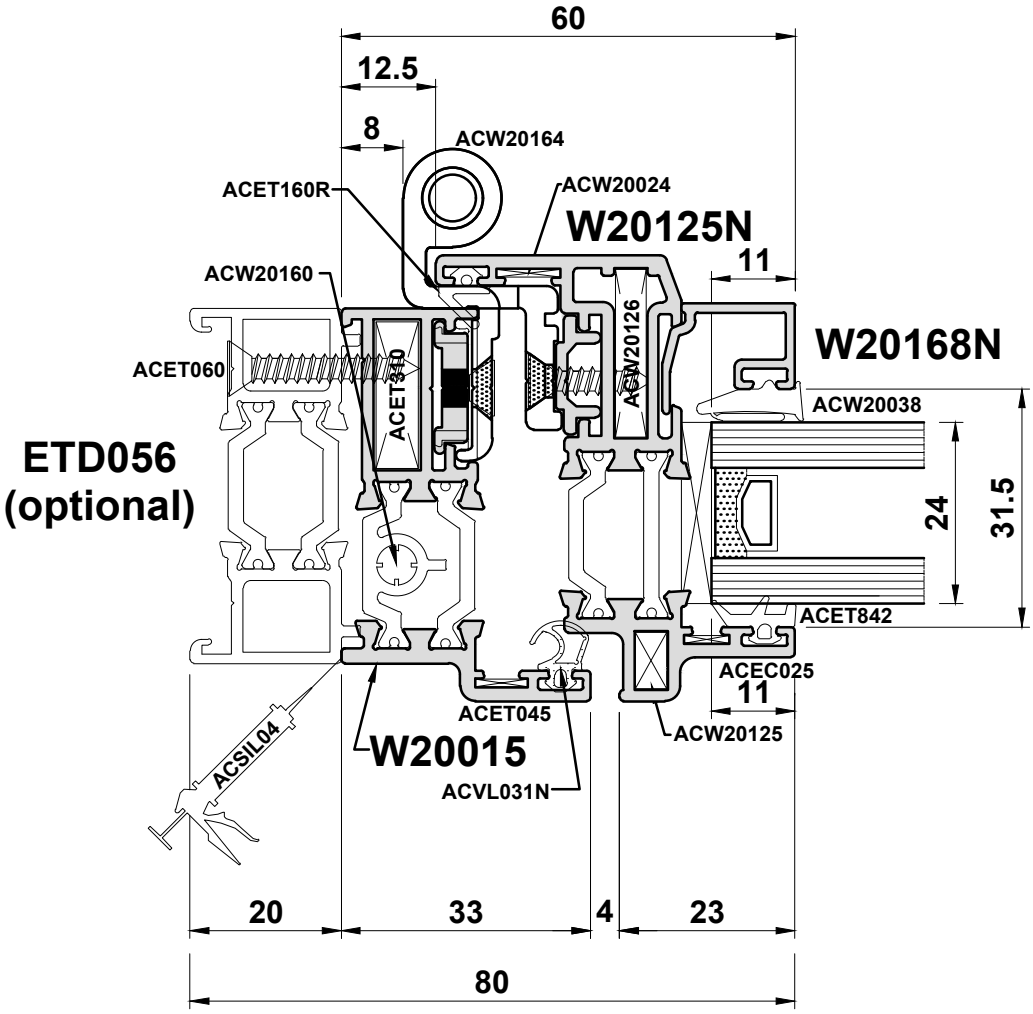


Do Not Scale From This Drawing

## Detail 10B

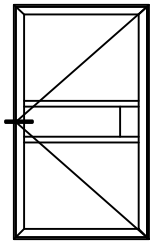

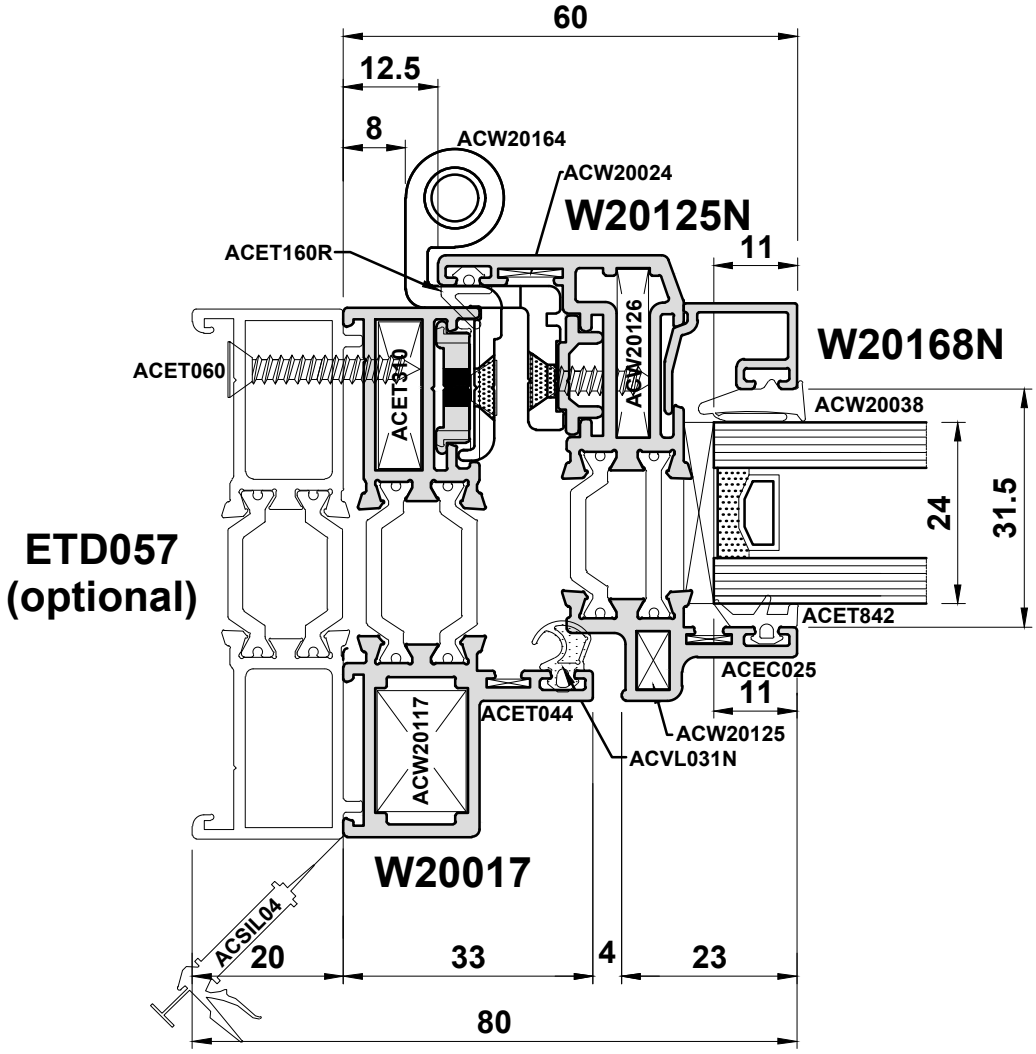


Do Not Scale From This Drawing

# Detail 11A

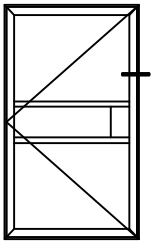

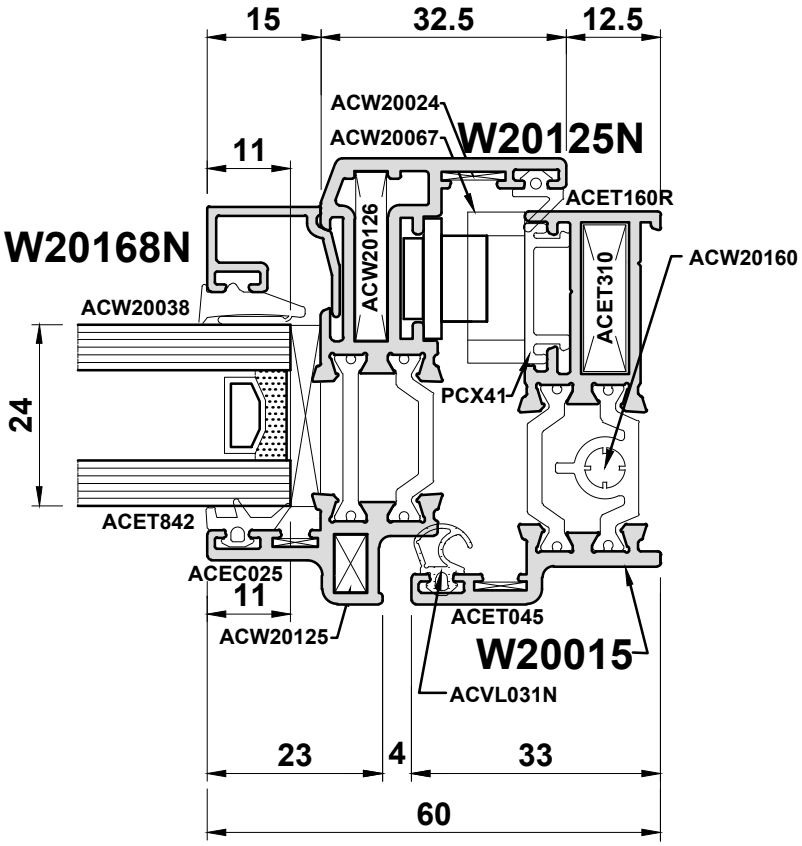


Do Not Scale From This Drawing

# Alitherm Heritage Door

## Detail 11B

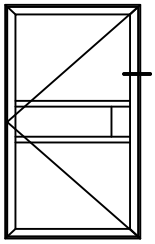

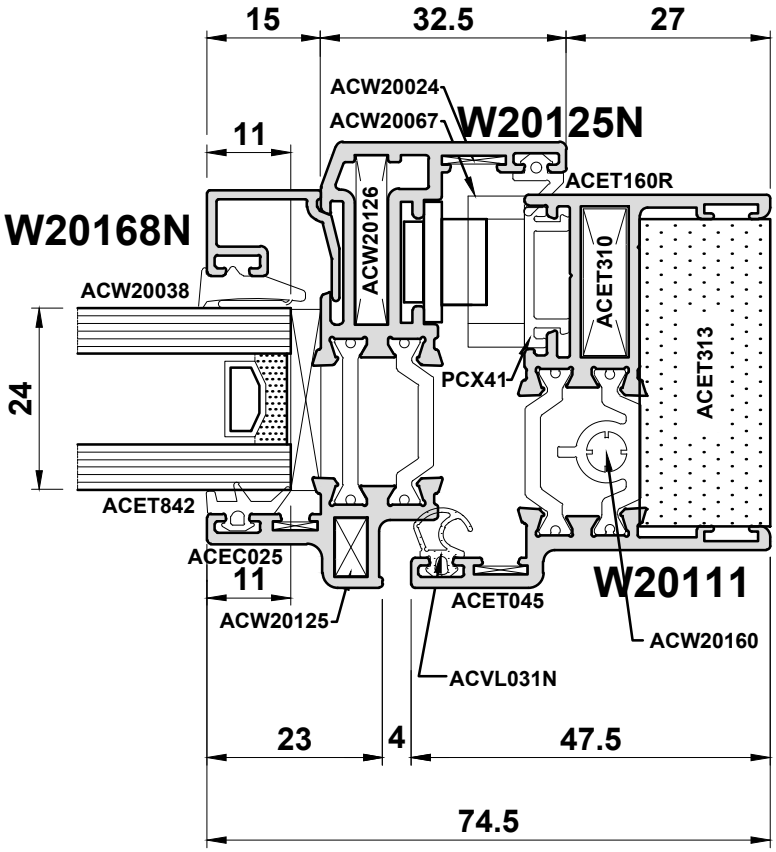


Do Not Scale From This Drawing



ISSUED: MAY 2021

## Detail 12A

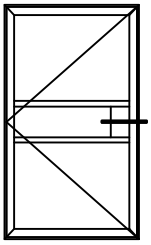

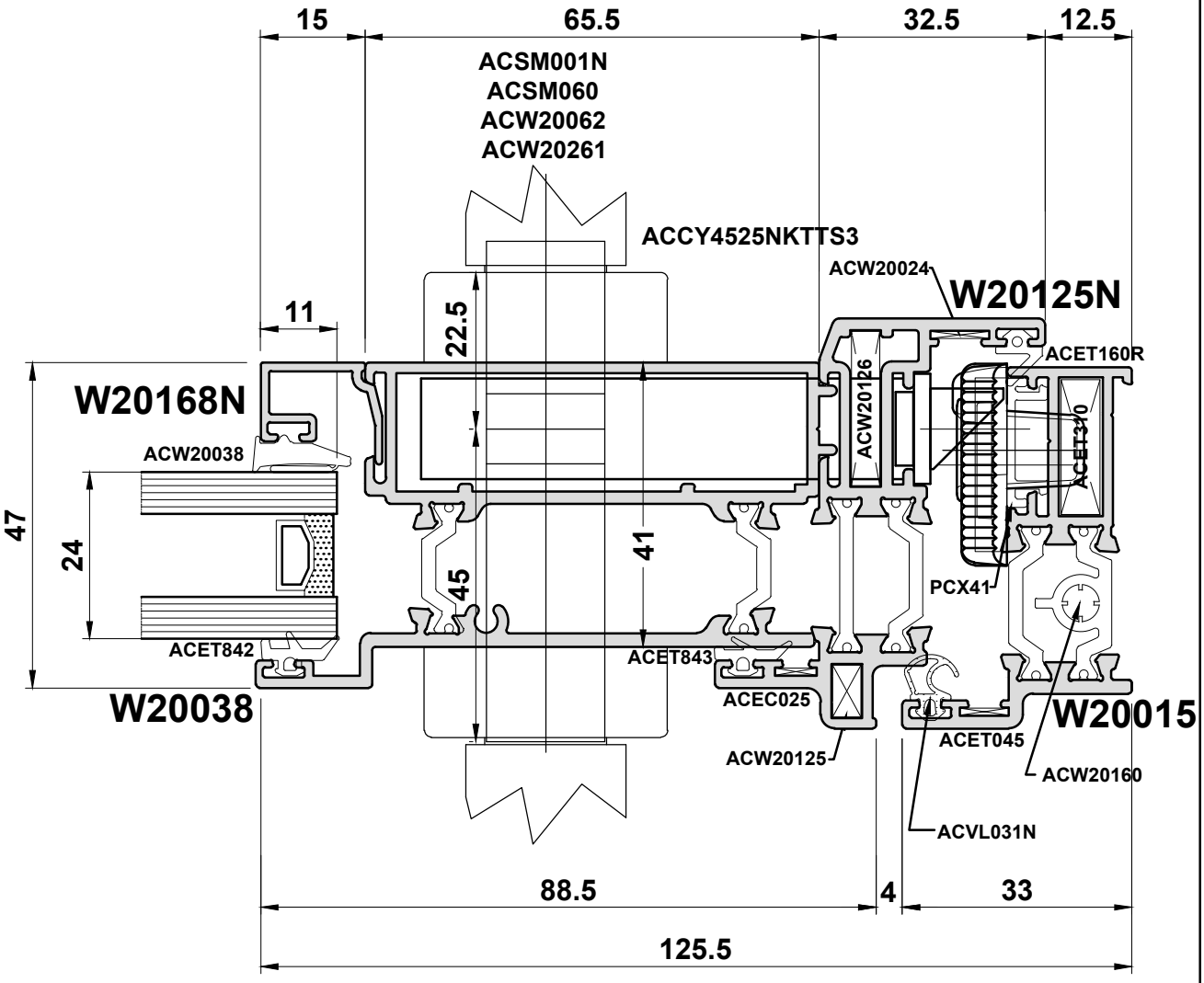


Do Not Scale From This Drawing

## Detail 12B

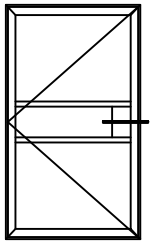

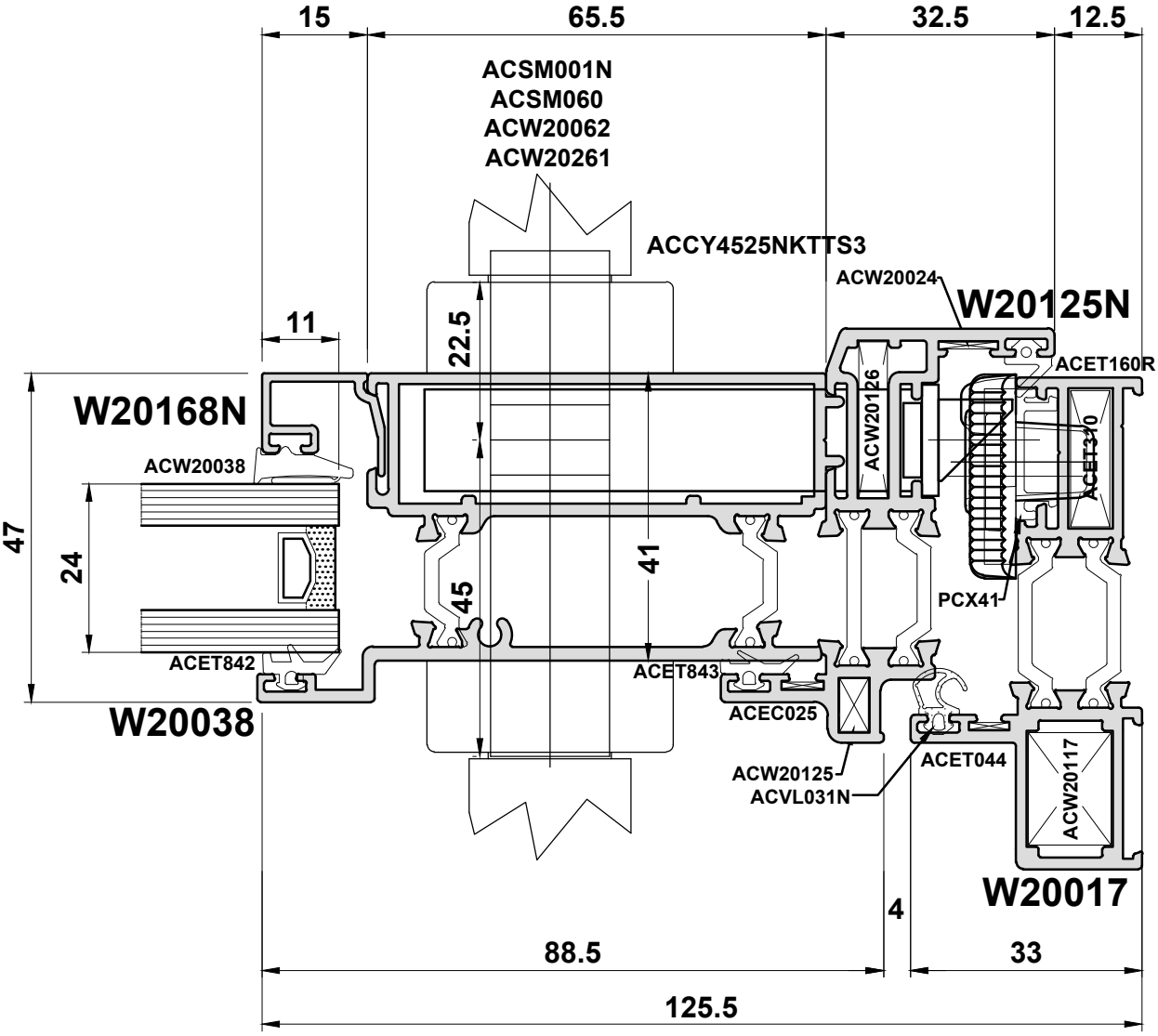


Do Not Scale From This Drawing

## Detail 12C

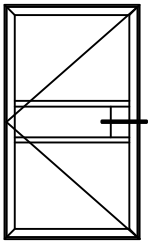

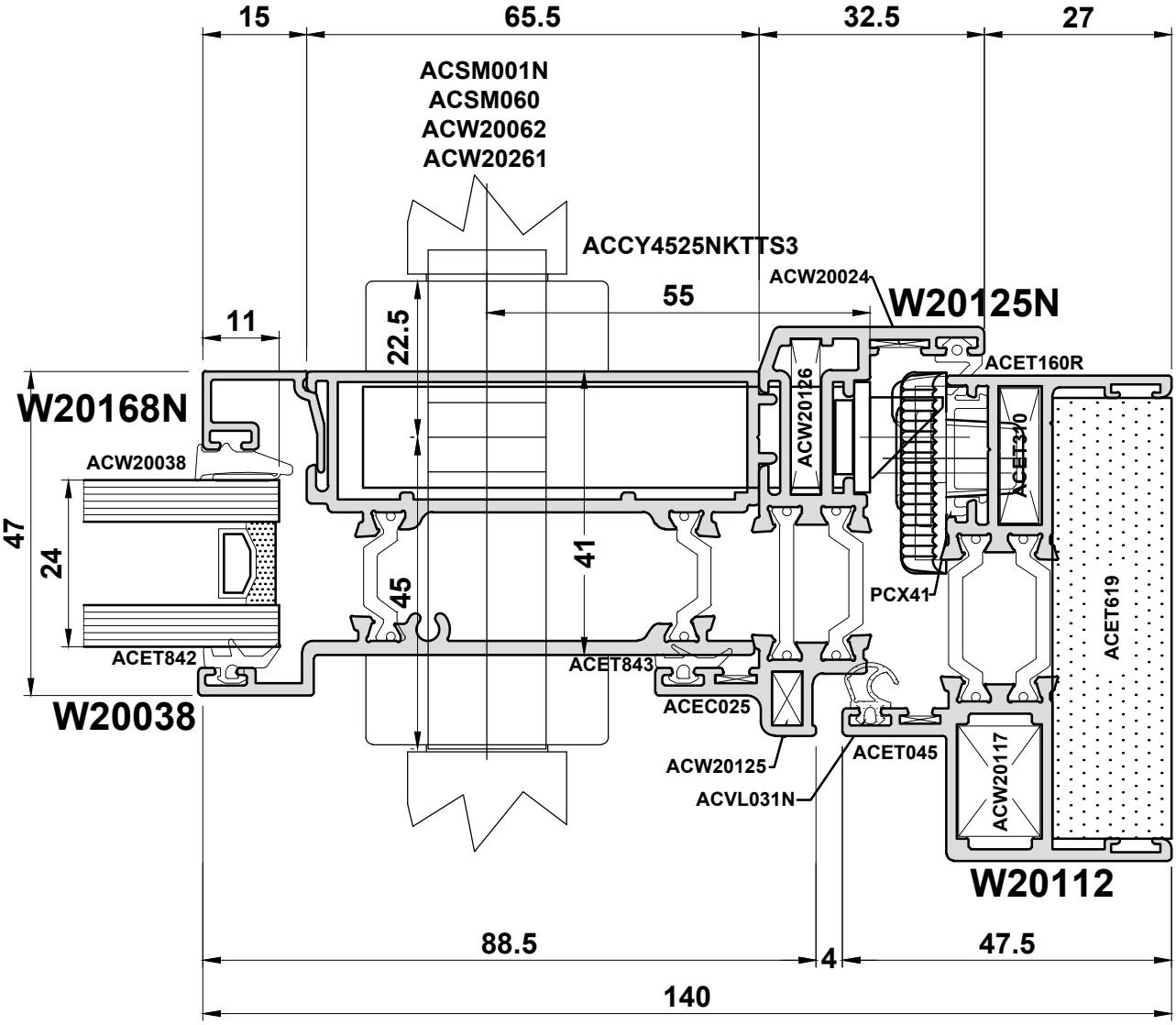


Do Not Scale From This Drawing

# Detail 13A

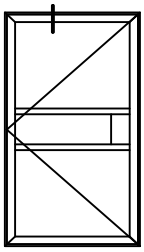

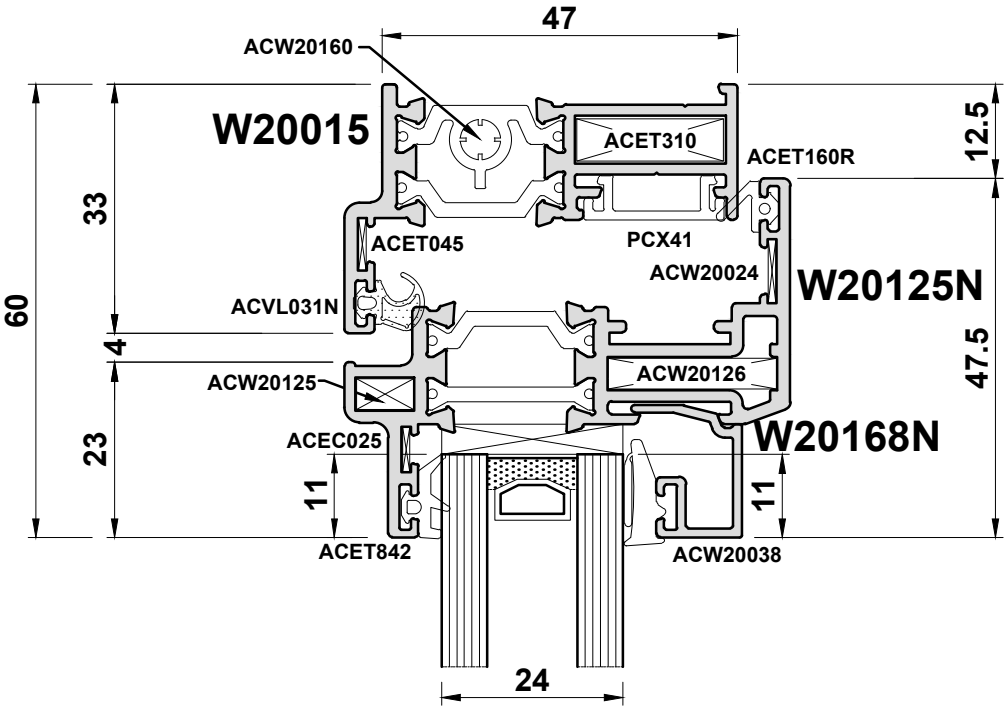


Do Not Scale From This Drawing

# Alitherm Heritage Door

## Detail 13B

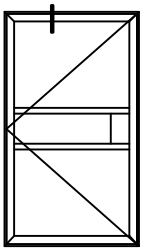

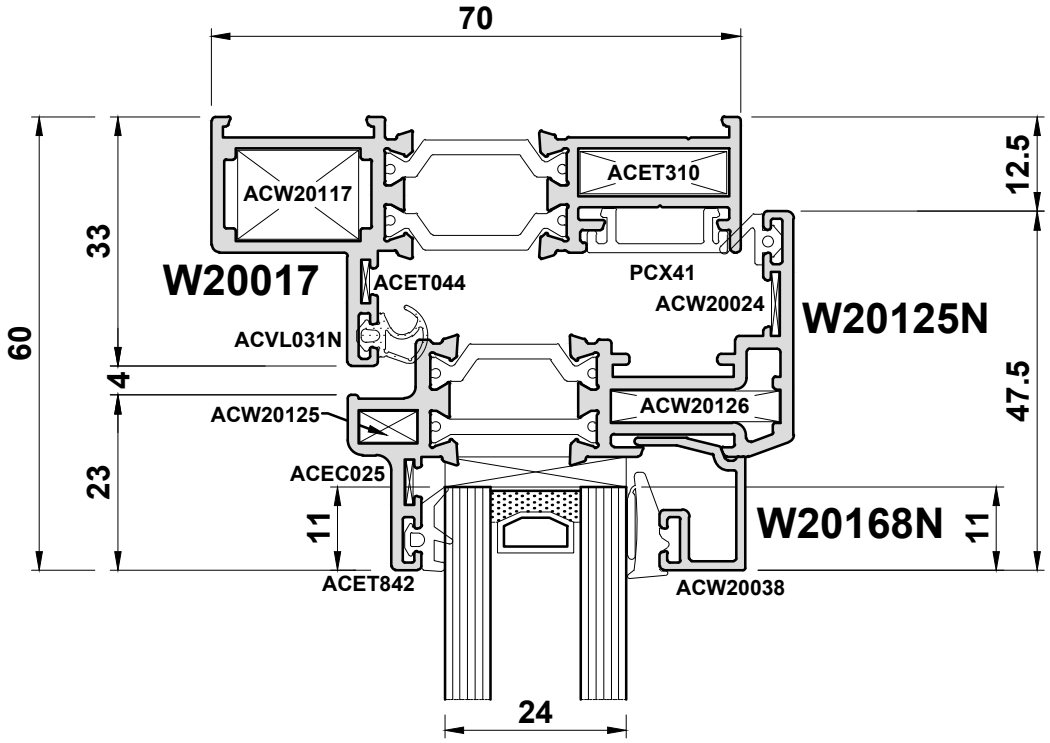


Do Not Scale From This Drawing

# Detail 13C

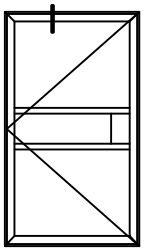

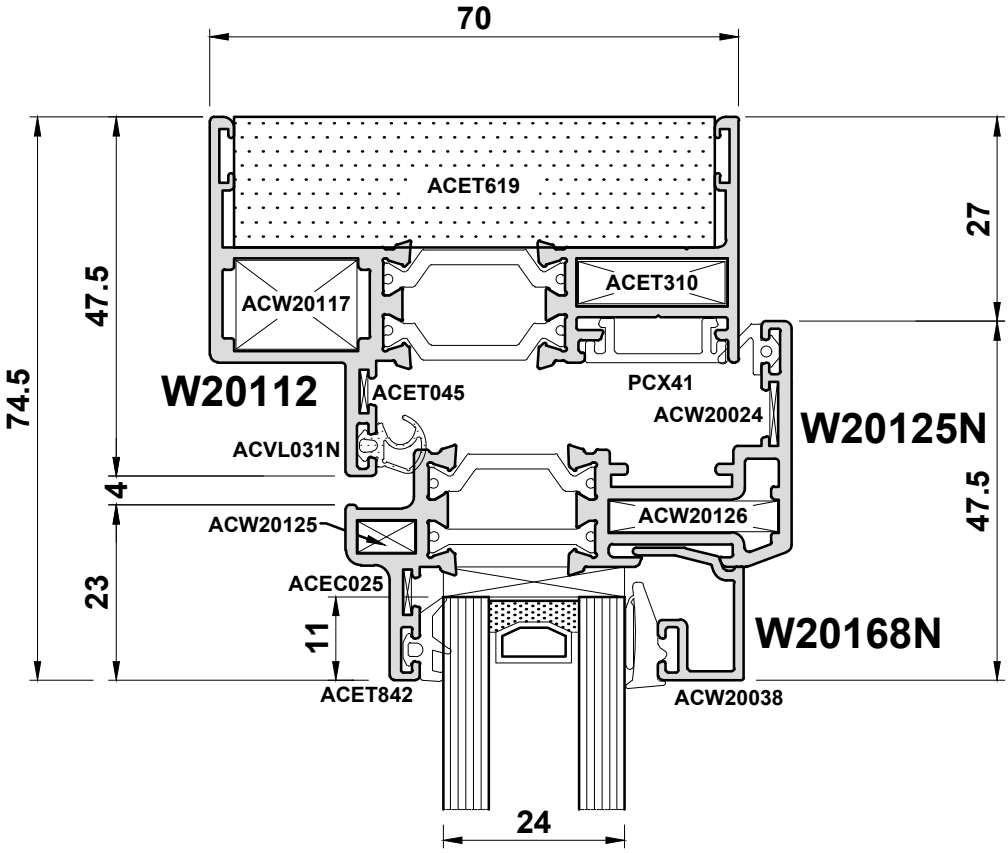


Do Not Scale From This Drawing

## Detail 14A

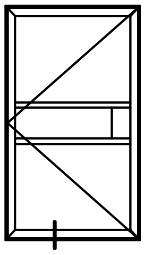

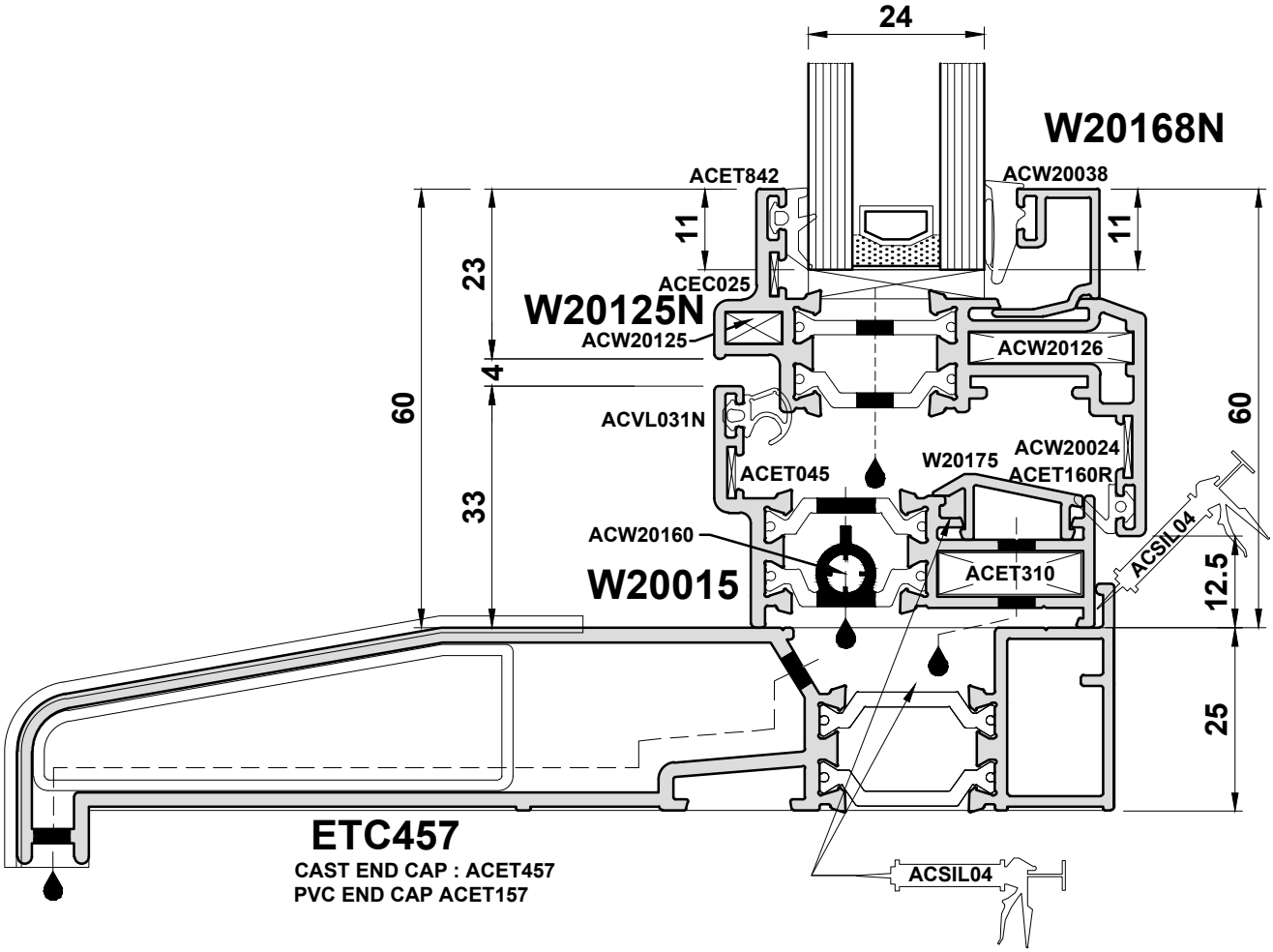


**Do Not Scale From This Drawing**

## Detail 14B

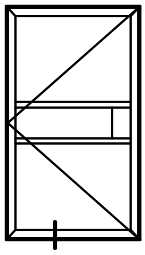

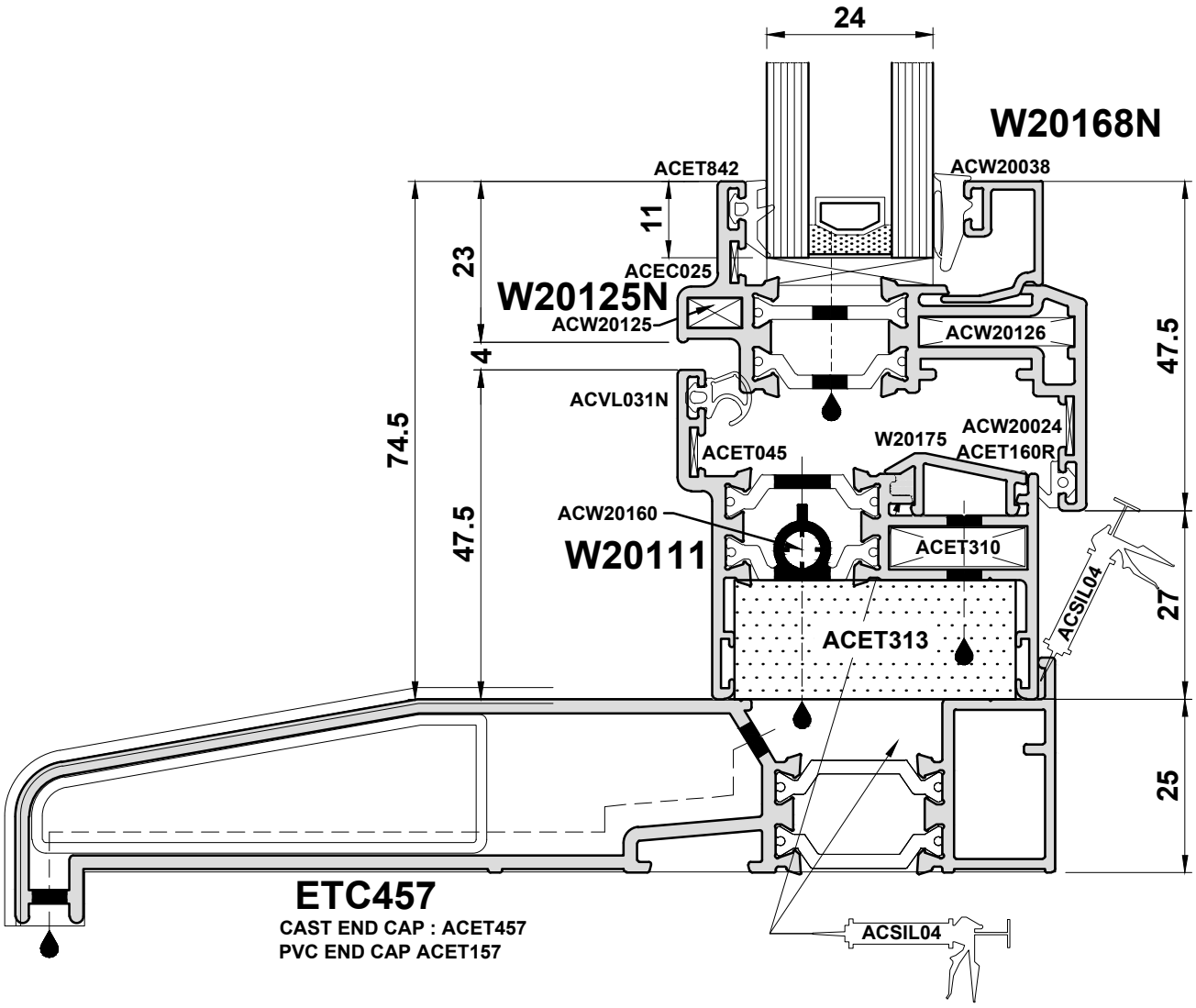


**Do Not Scale From This Drawing**

## Detail 14C

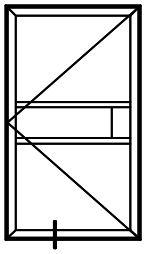

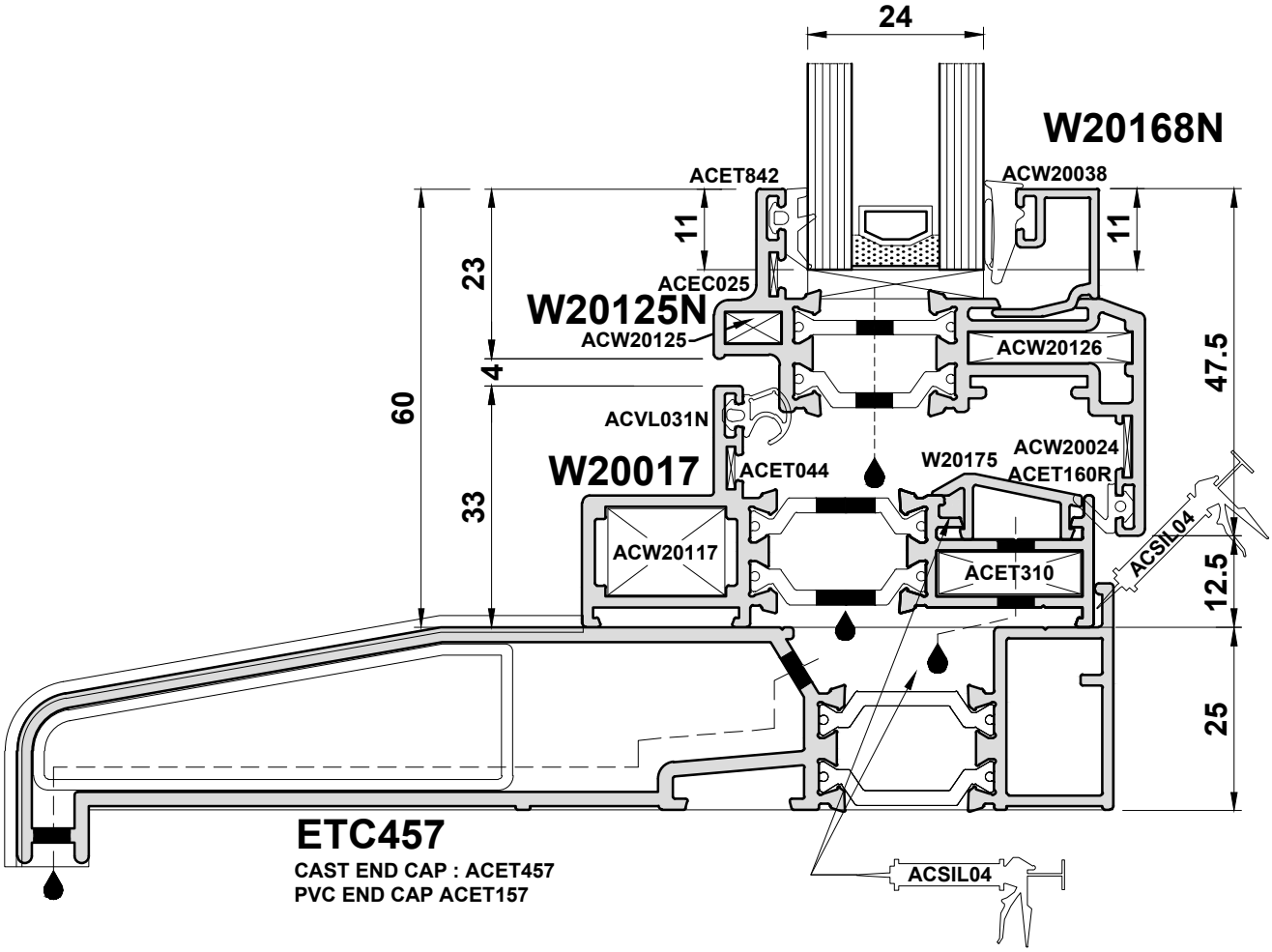


**Do Not Scale From This Drawing**

# Detail 15

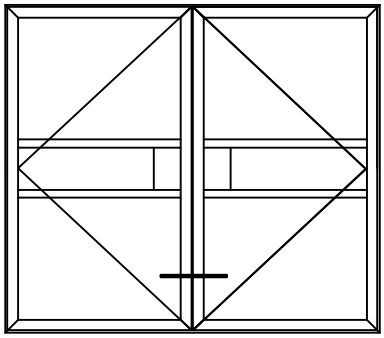

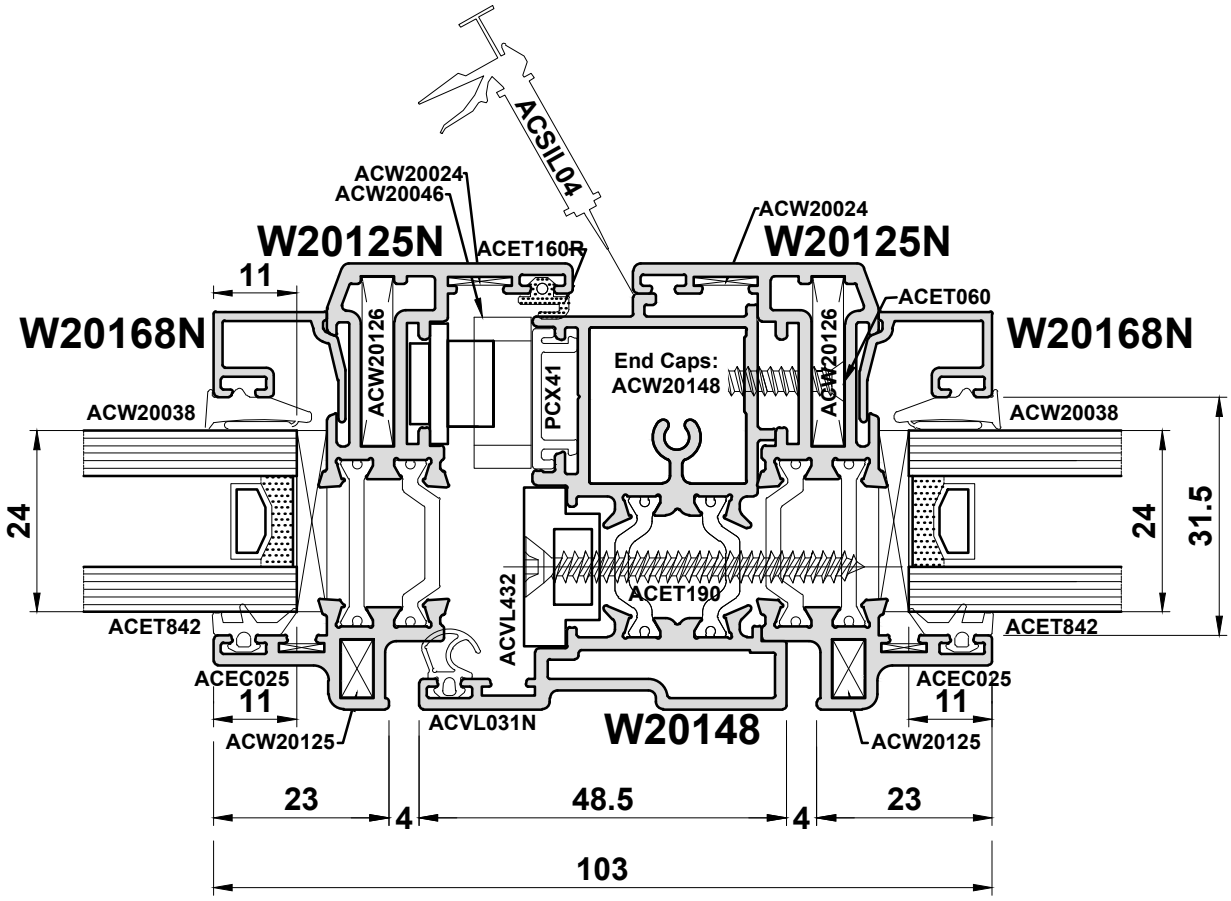


Do Not Scale From This Drawing

## Detail 16

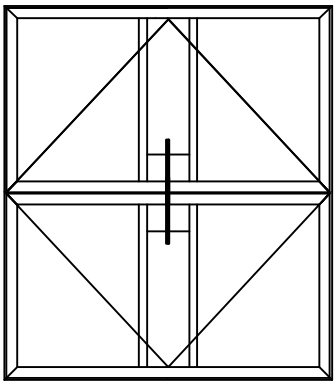

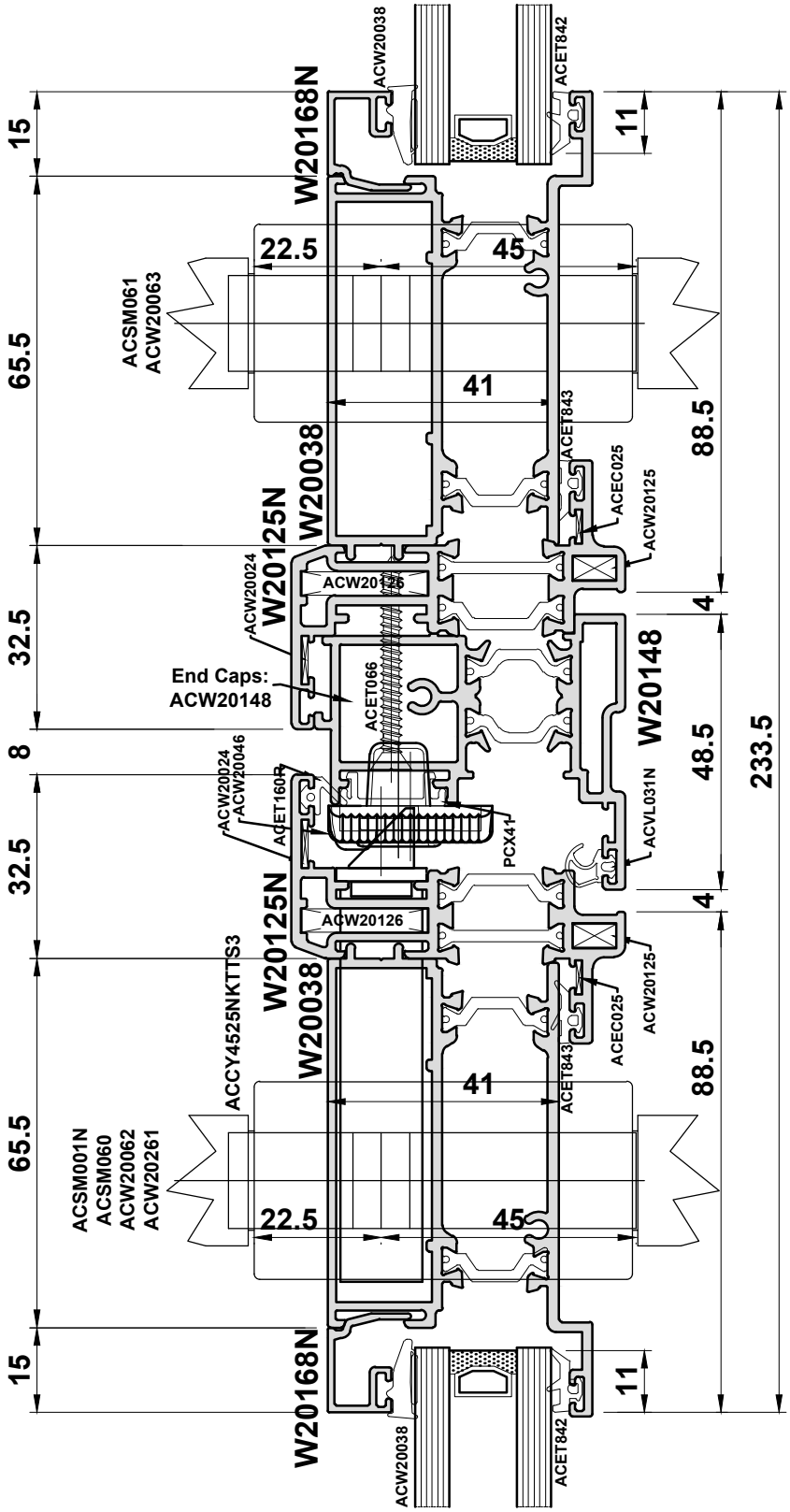


Do Not Scale From This Drawing

## Detail 17

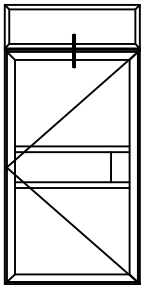

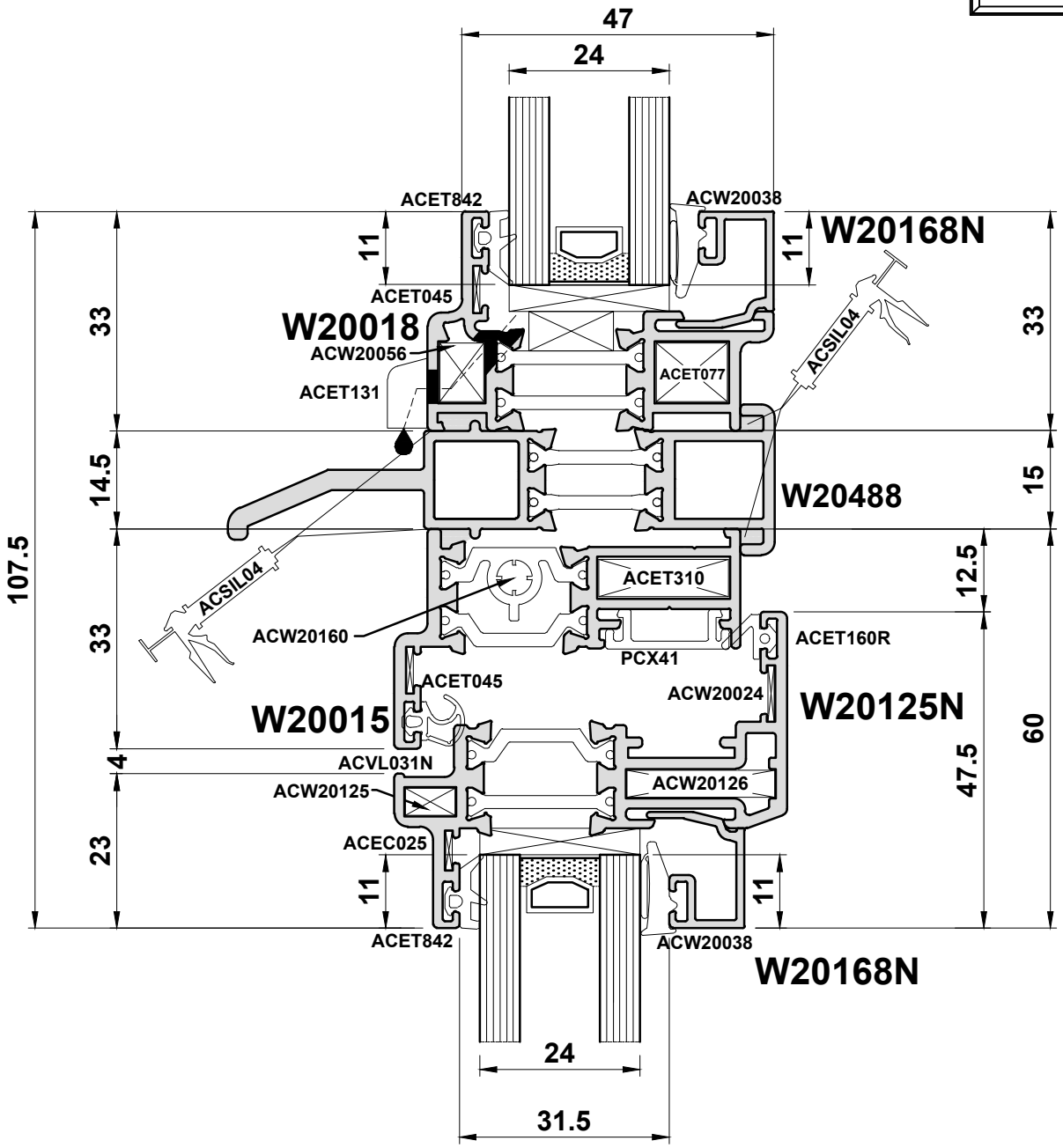


**Do Not Scale From This Drawing**

# Alitherm Heritage Door

## Detail 18A

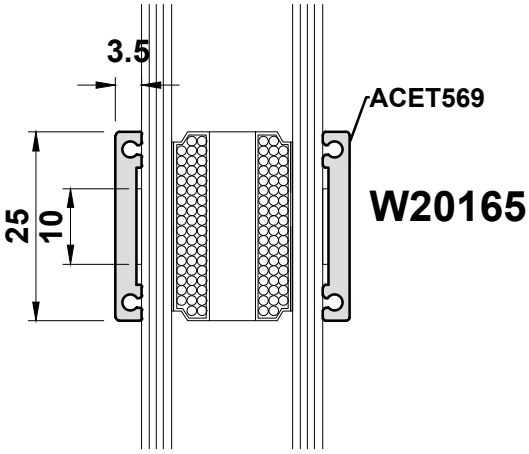


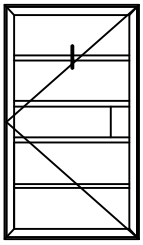

## Detail 18B

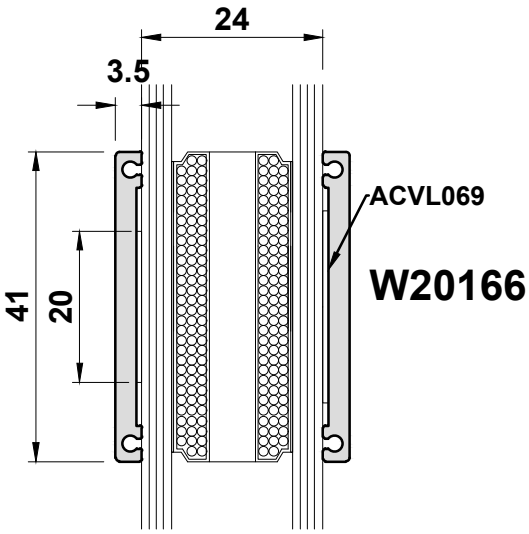


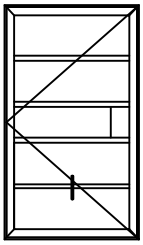

Do Not Scale From This Drawing

Do Not Scale From This Drawing

# Alitherm Heritage Door

## PAS24:2016 Open Out Doors

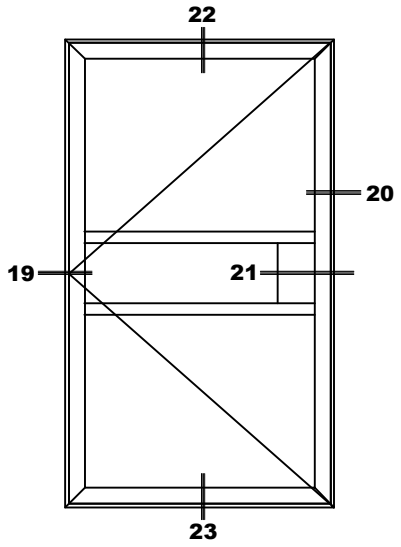


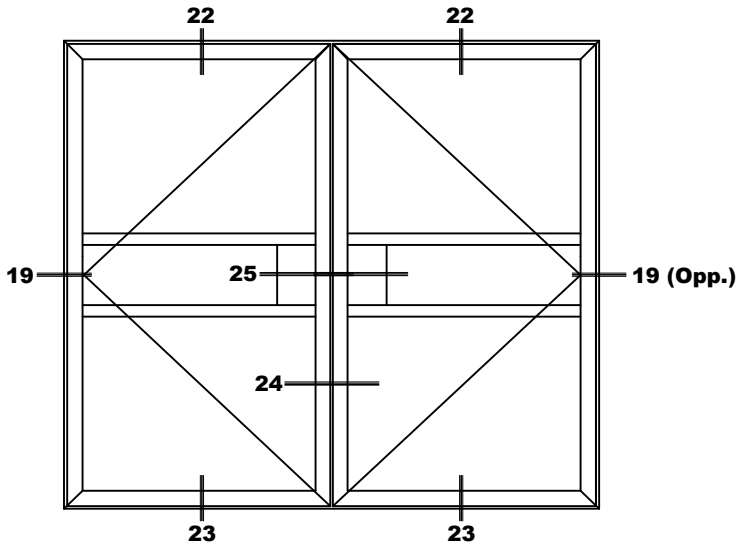


**Do Not Scale From This Drawing**

# Detail 19A

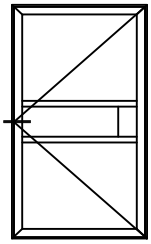

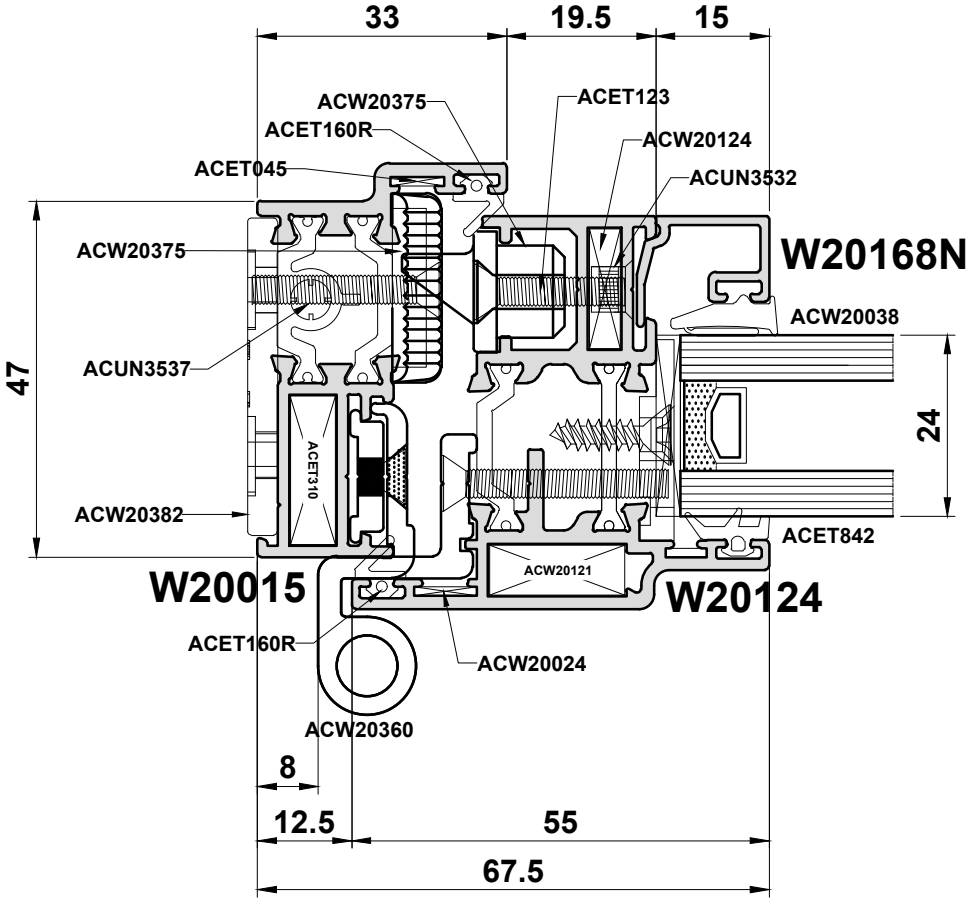


Do Not Scale From This Drawing

# Alitherm Heritage Door

## Detail 19B

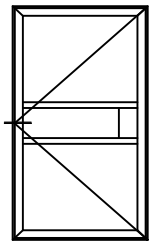

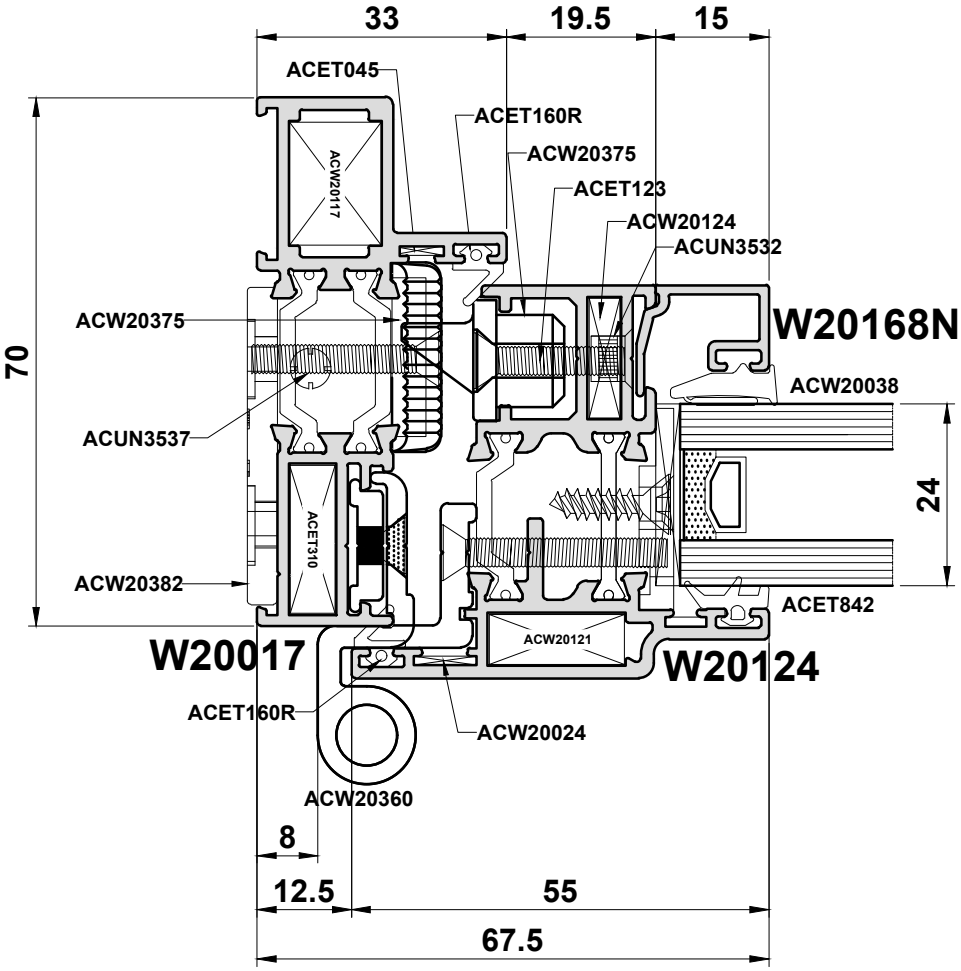


Do Not Scale From This Drawing

# Alitherm Heritage Door

## Detail 20A

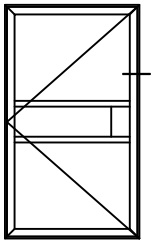

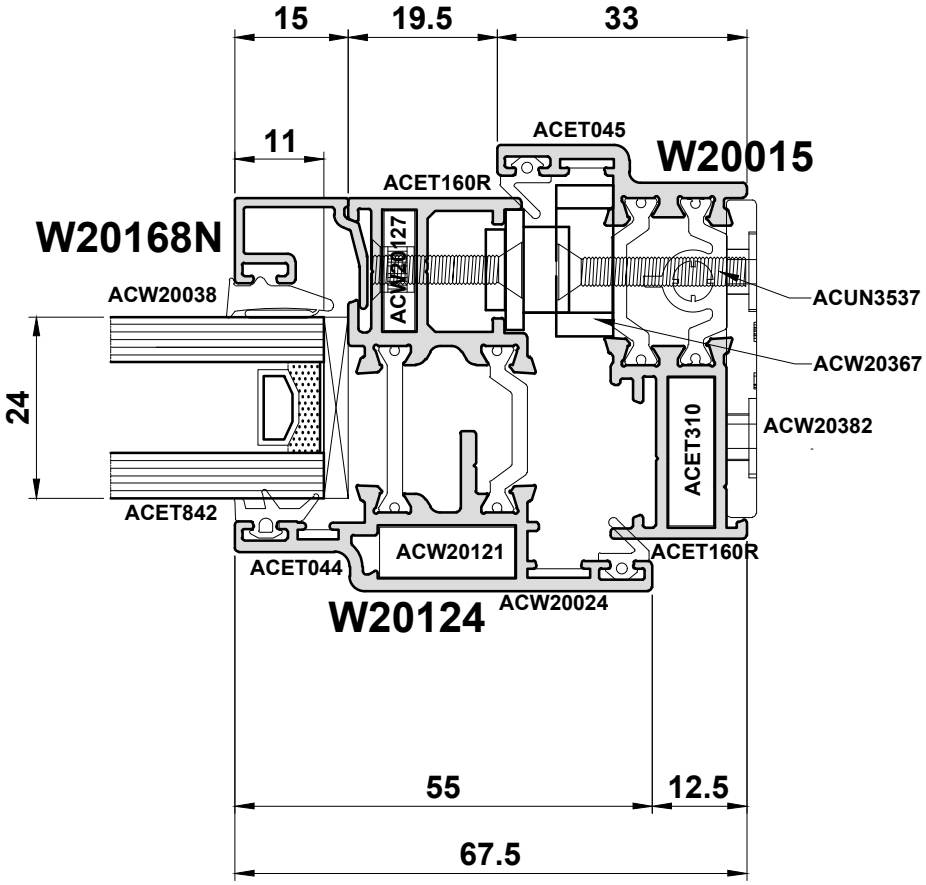


Do Not Scale From This Drawing



ISSUED: MAY 2021

# Alitherm Heritage Door

## Detail 20B

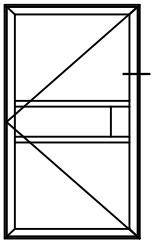

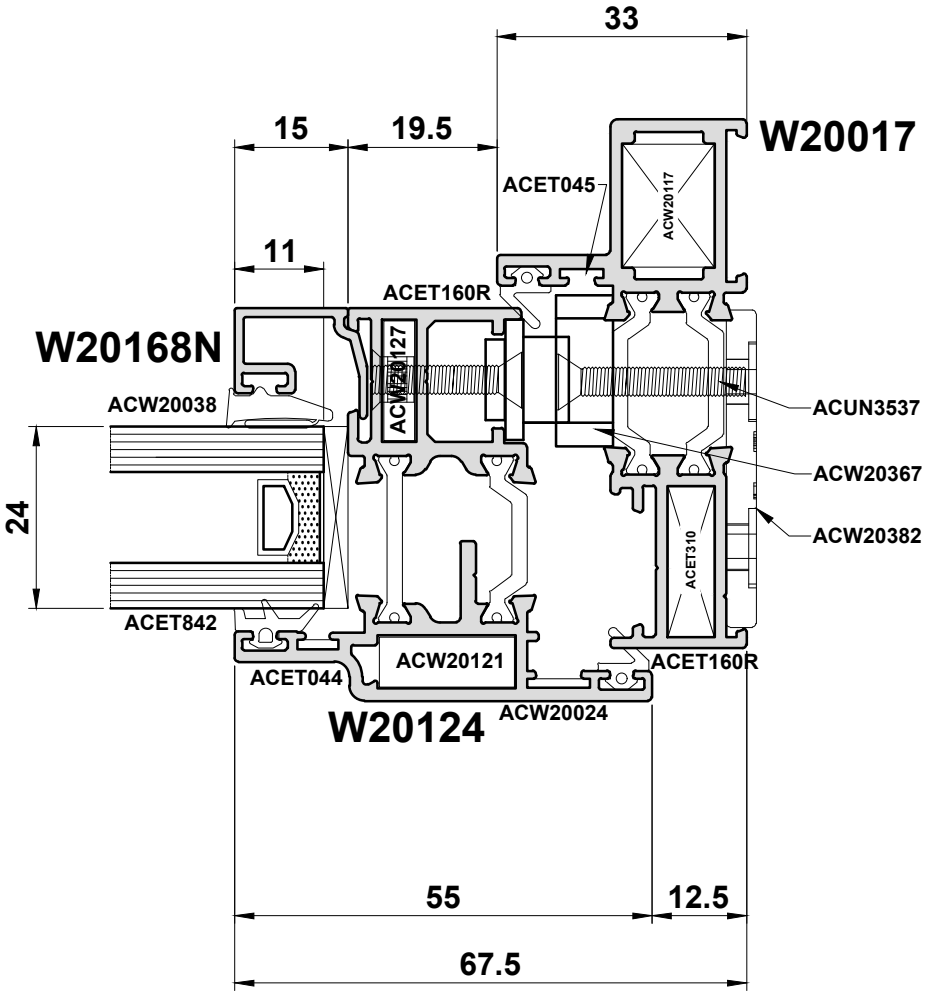


Do Not Scale From This Drawing

## Detail 21A

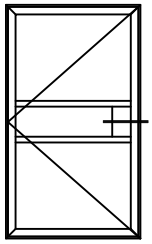

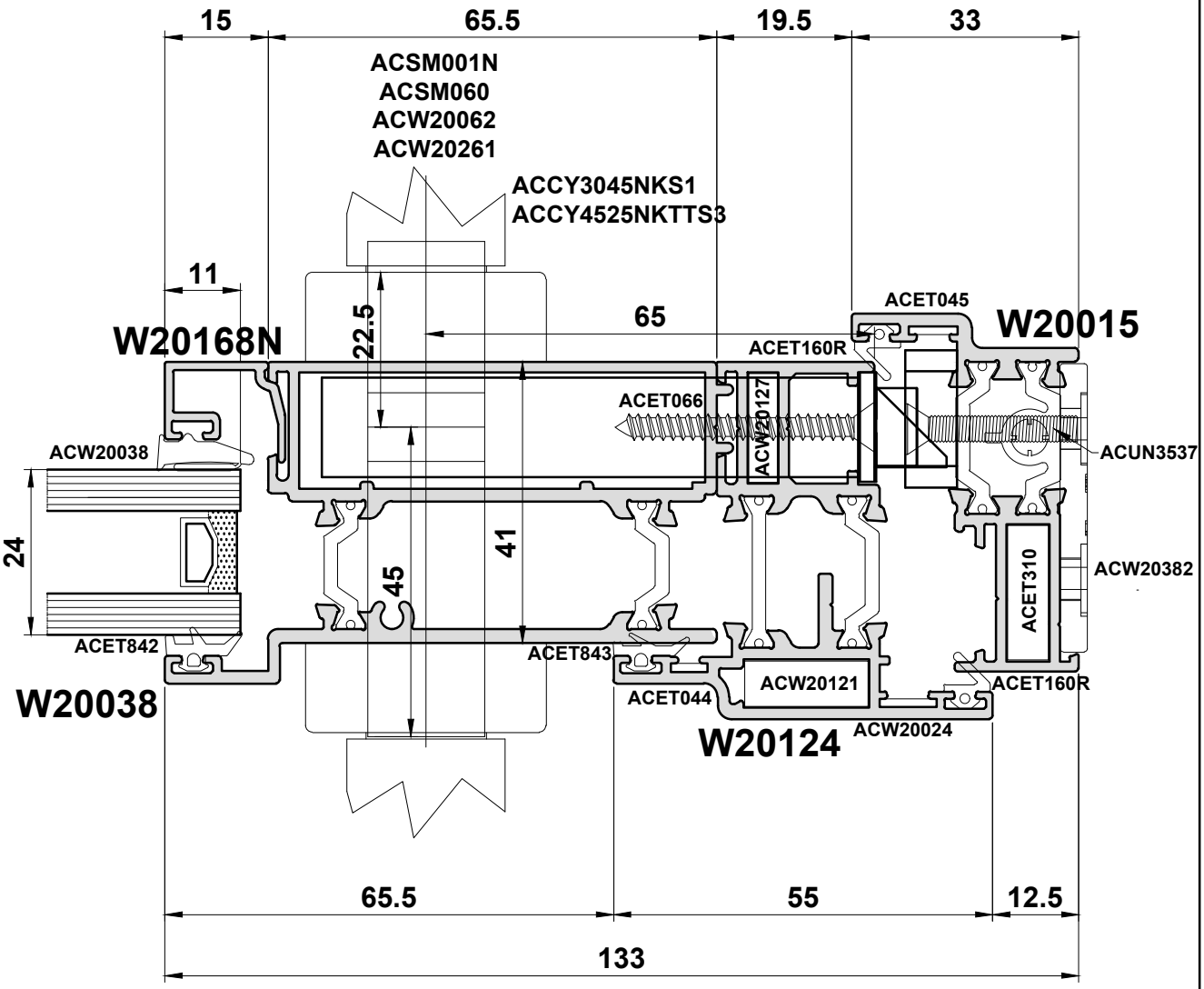


Do Not Scale From This Drawing

# Alitherm Heritage Door

## Detail 21B

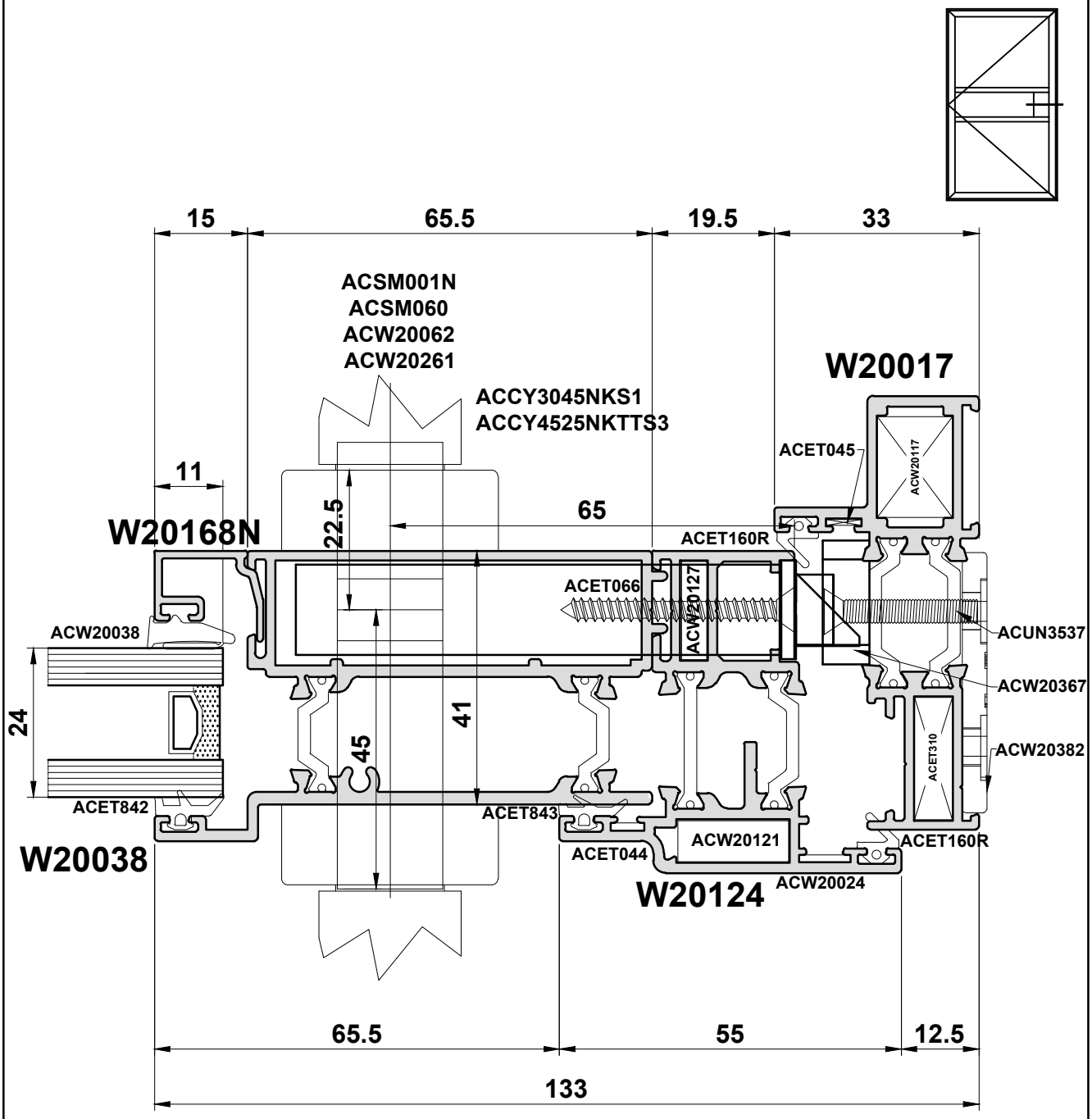


Do Not Scale From This Drawing

# Detail 22A

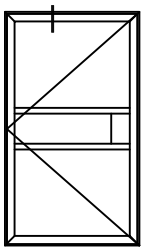

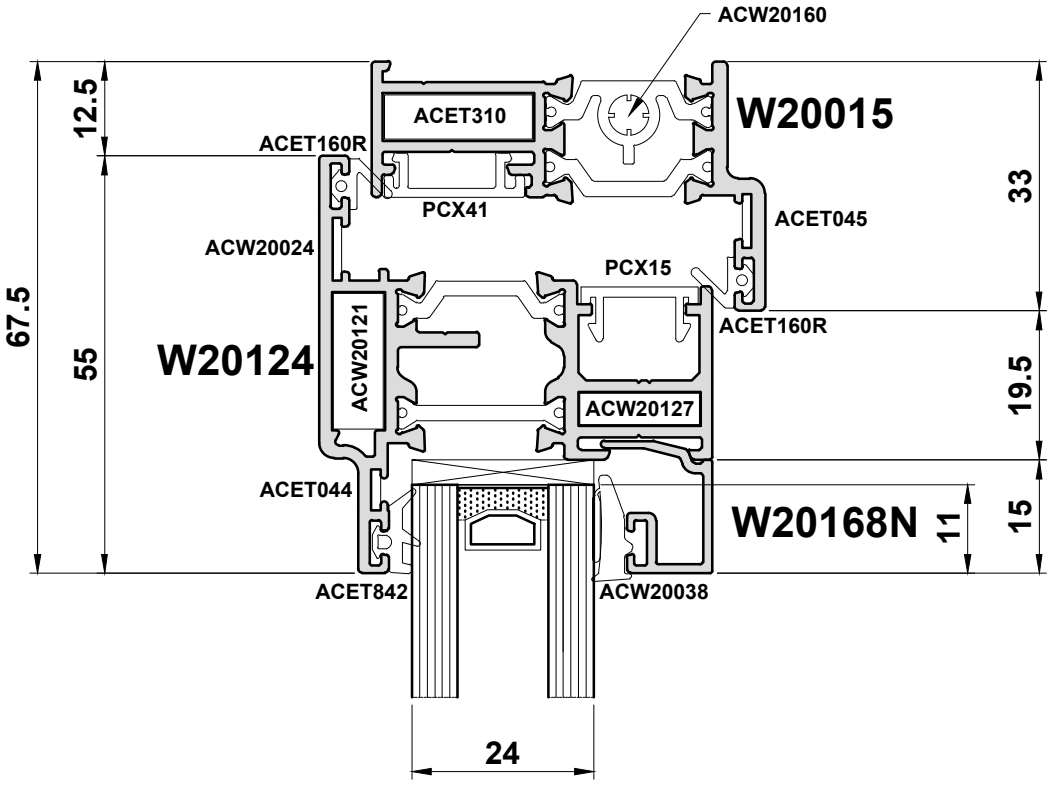


Do Not Scale From This Drawing

# Alitherm Heritage Door

## Detail 22B

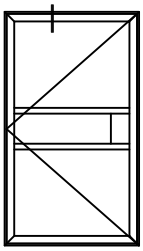

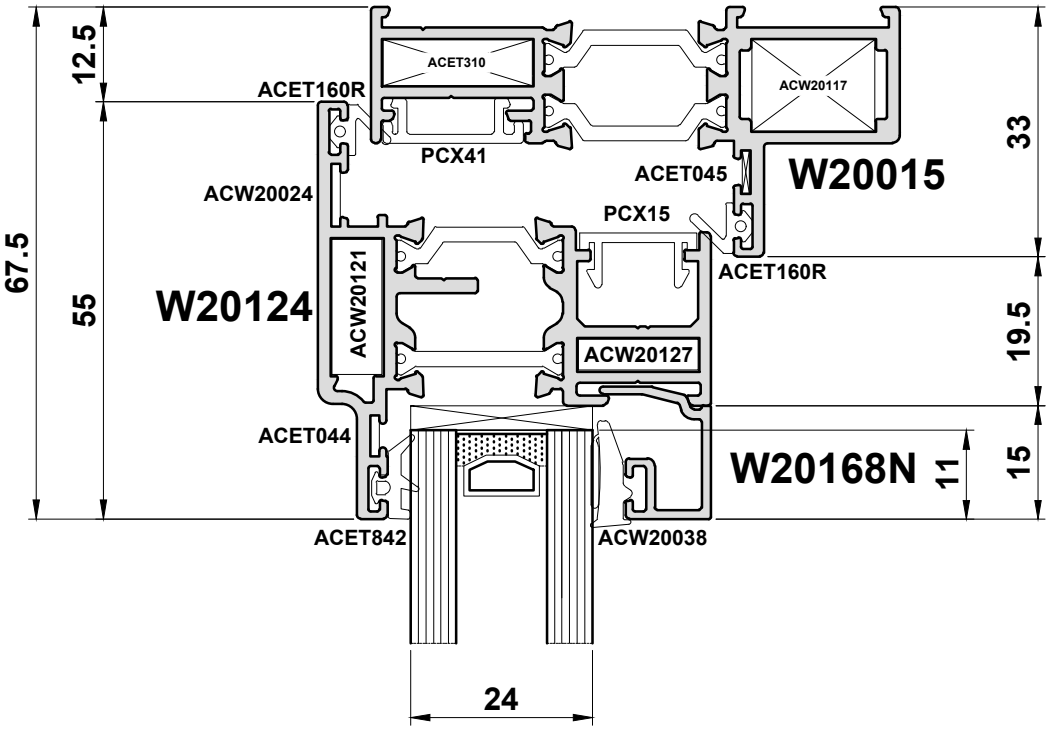


Do Not Scale From This Drawing

# Alitherm Heritage Door

## Detail 23A

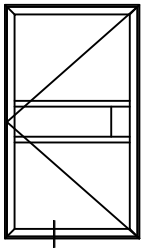

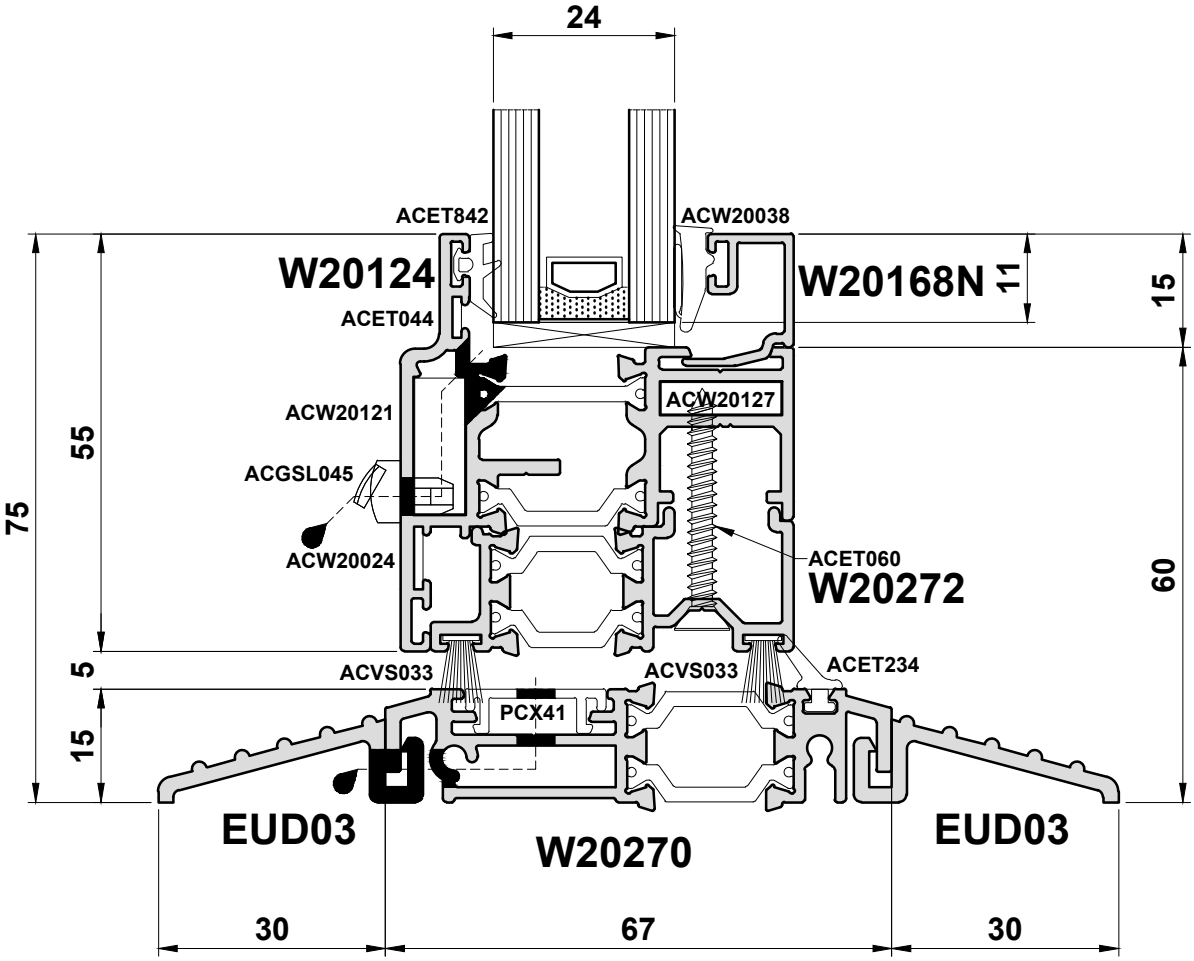


Do Not Scale From This Drawing



ISSUED: MAY 2021

# Alitherm Heritage Door

## Detail 23B

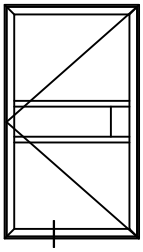

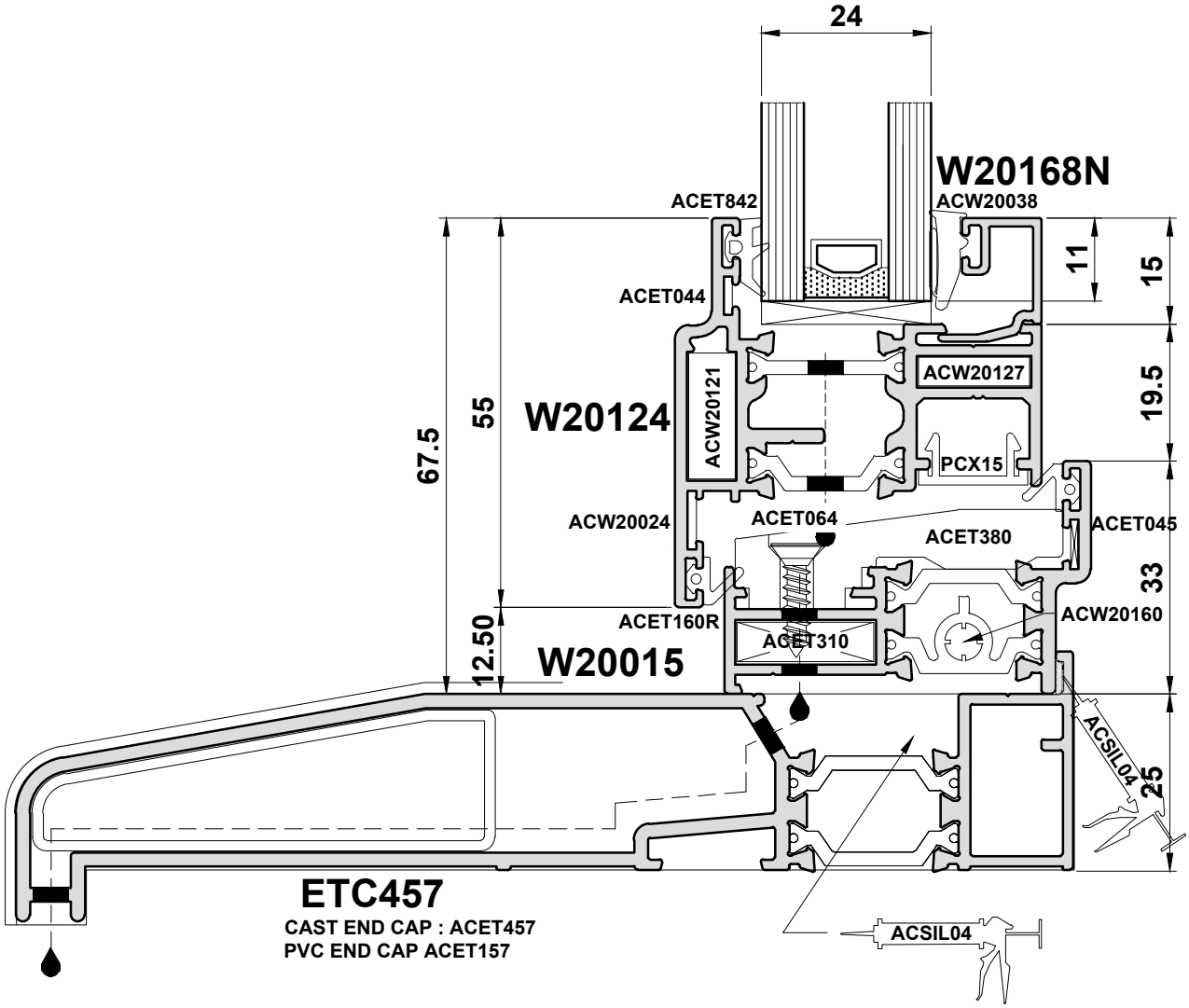


**Do Not Scale From This Drawing**

# Alitherm Heritage Door

## Detail 23C

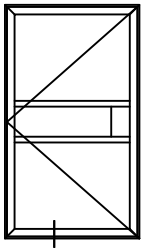

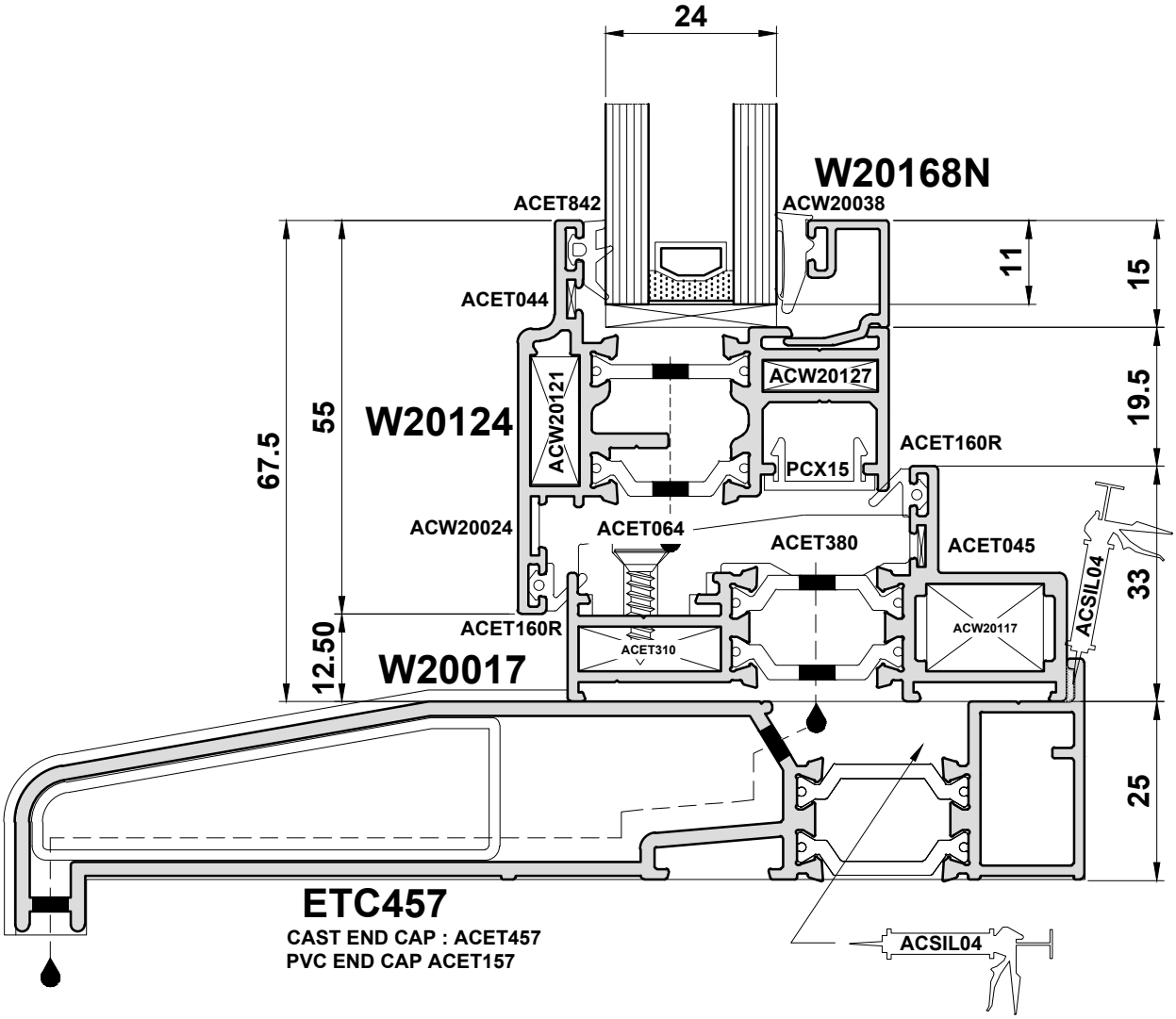


**Do Not Scale From This Drawing**



ISSUED: MAY 2021

# Alitherm Heritage Door

## Detail 24

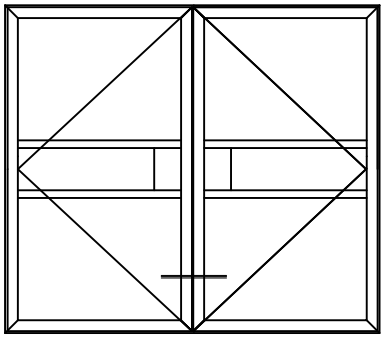

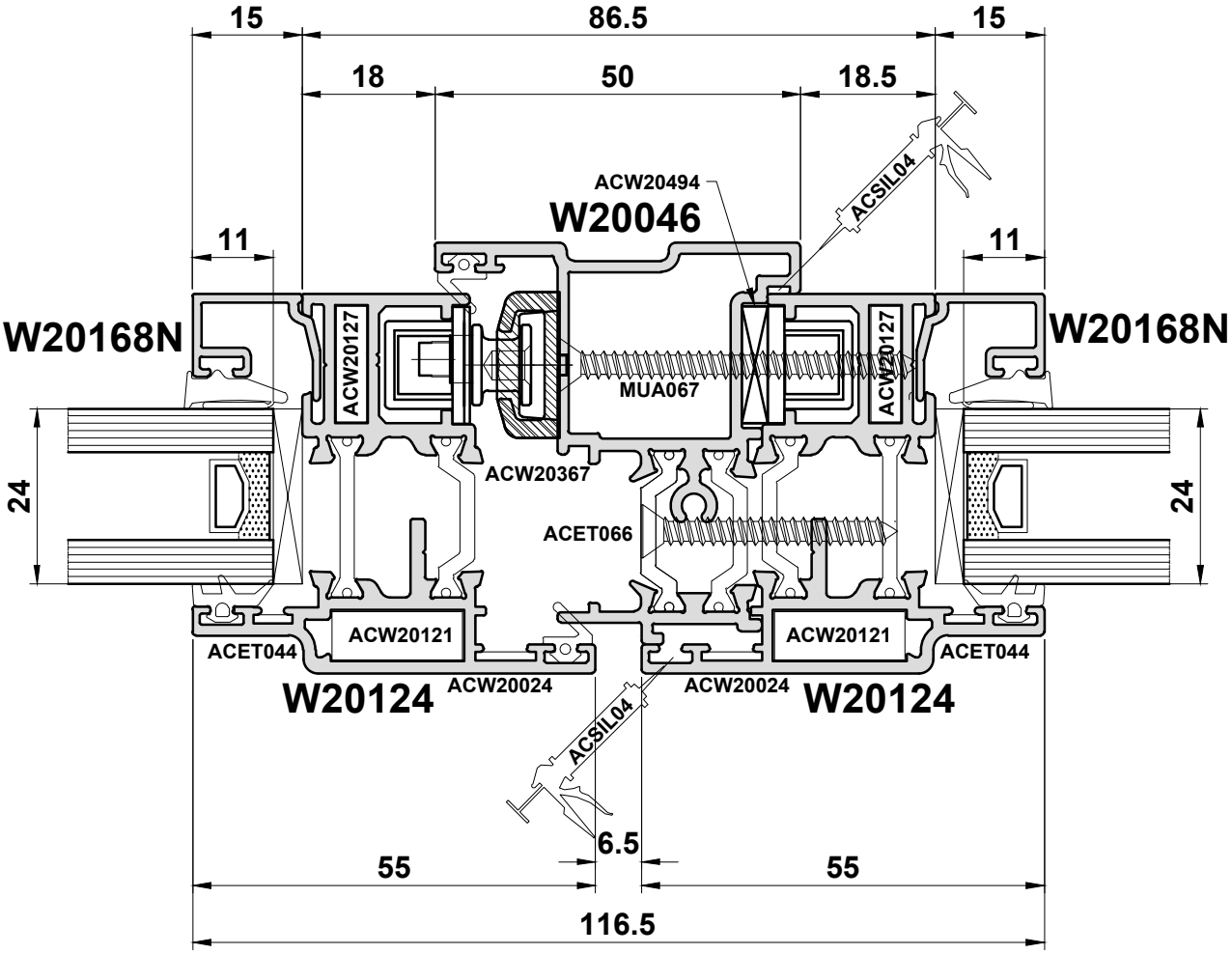


Do Not Scale From This Drawing

## Detail 25

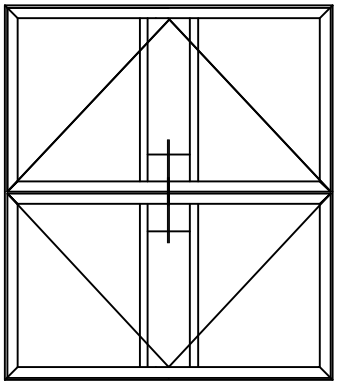

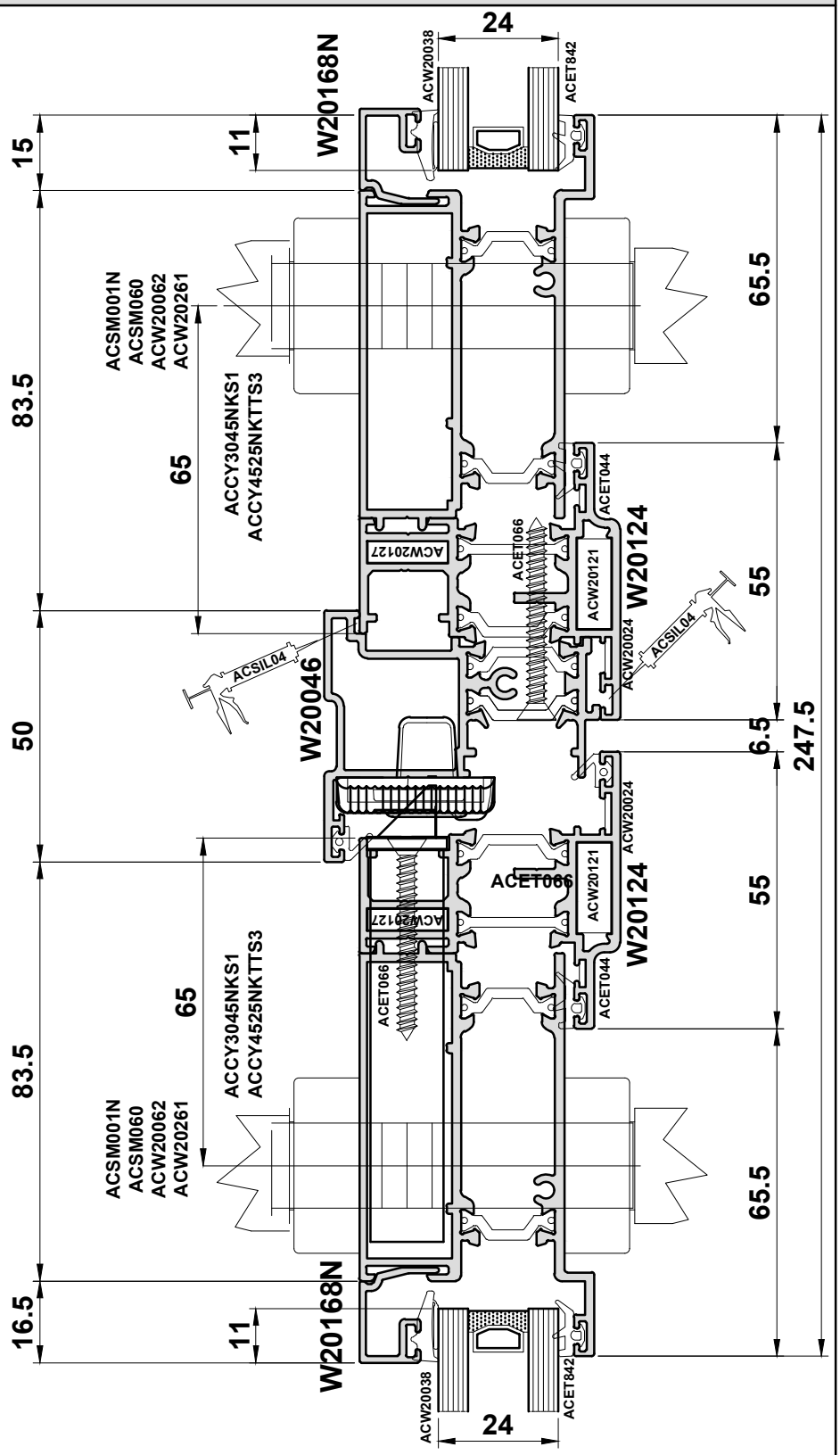


**Do Not Scale From This Drawing**

# PAS24:2016 Open In Doors

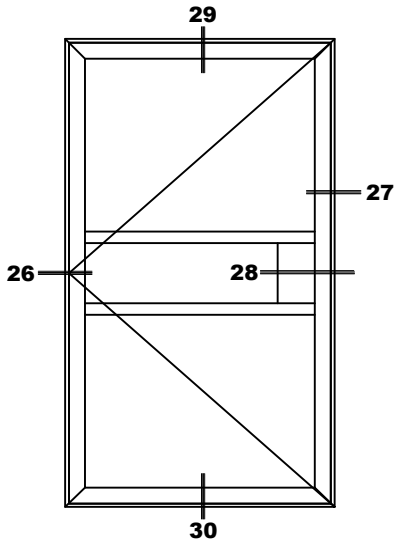


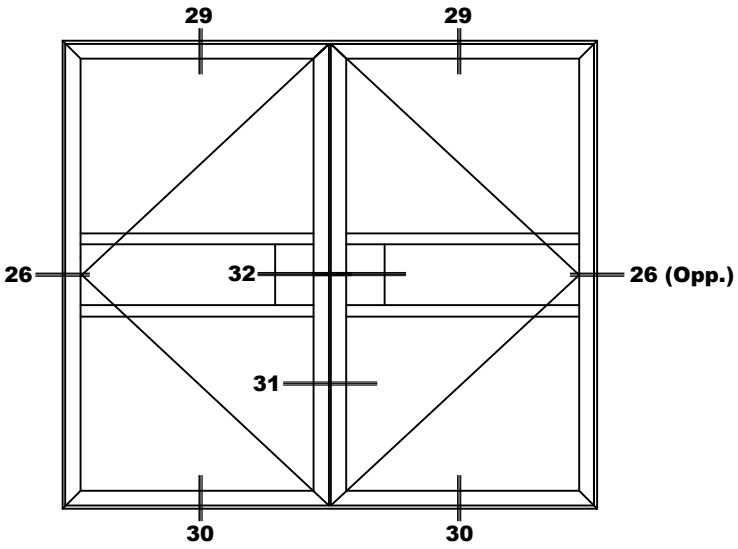


Do Not Scale From This Drawing

# Detail 26A

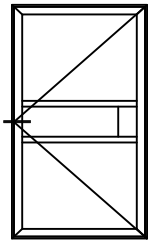

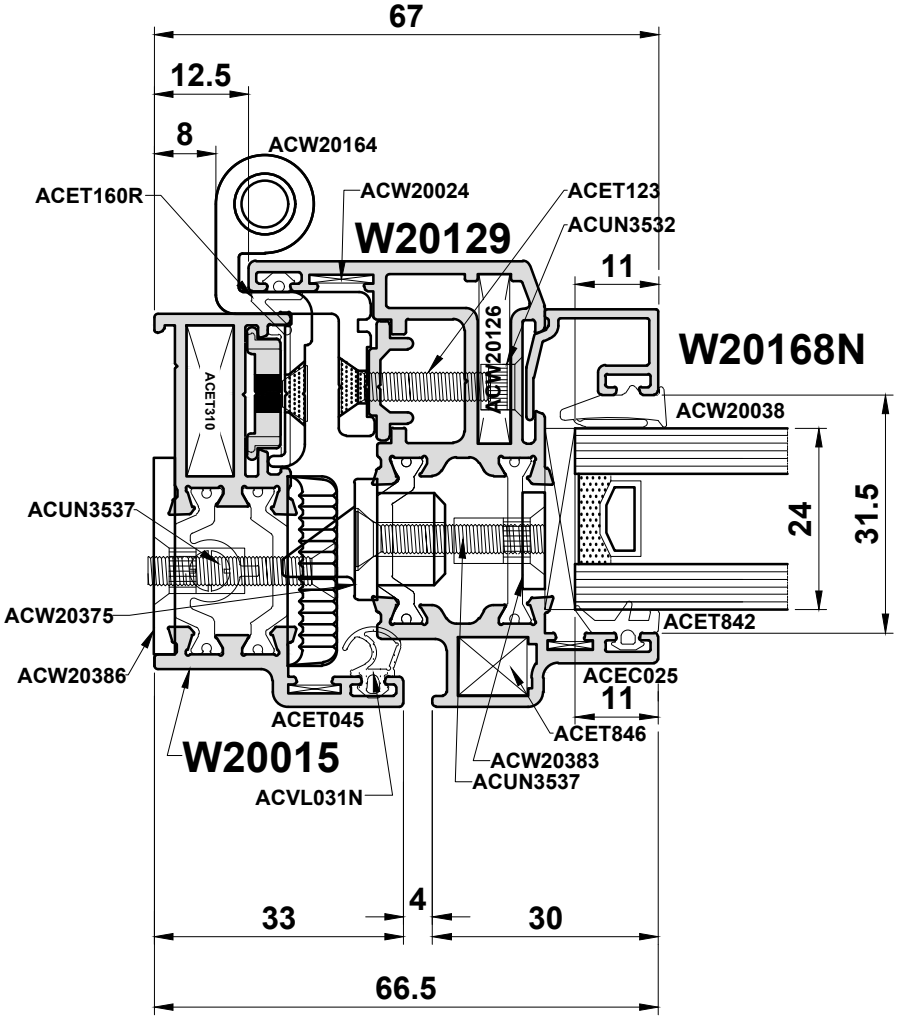


Do Not Scale From This Drawing

# Alitherm Heritage Door

## Detail 26B

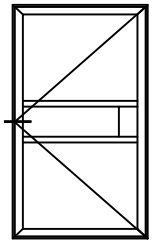

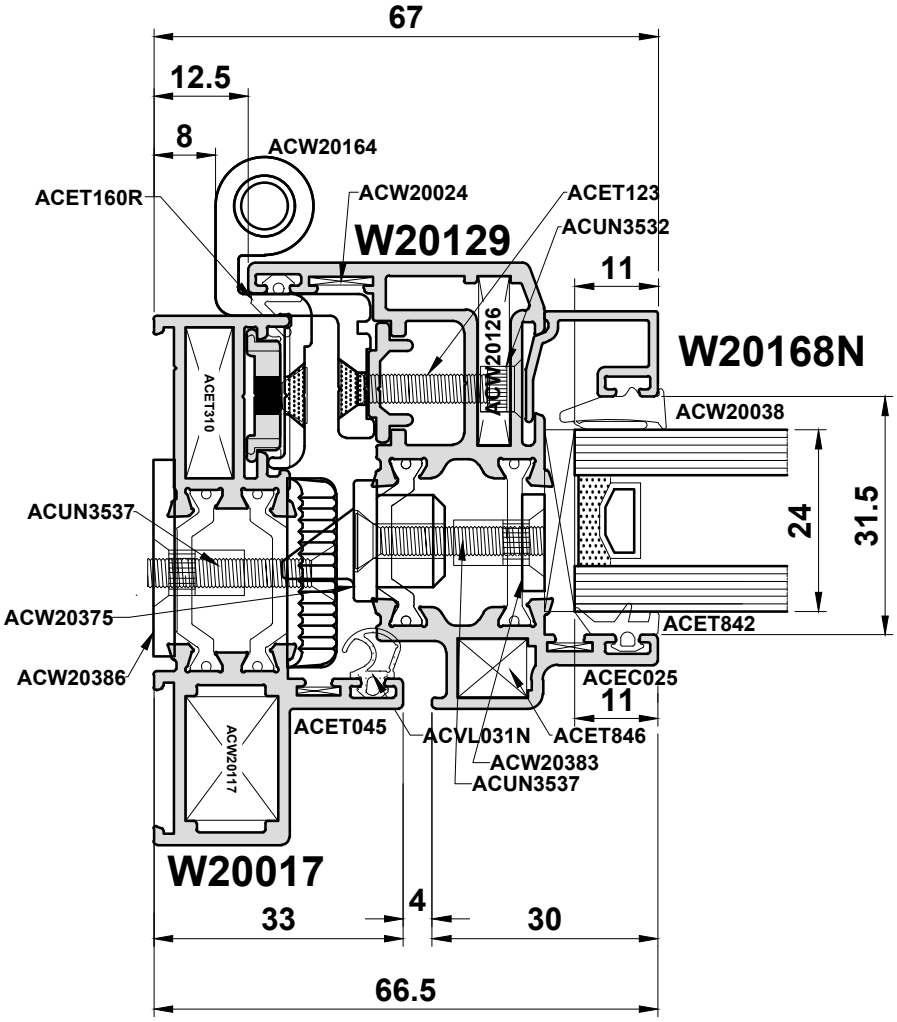


Do Not Scale From This Drawing

# Detail 27A

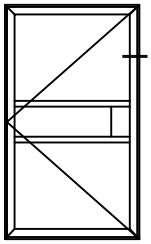

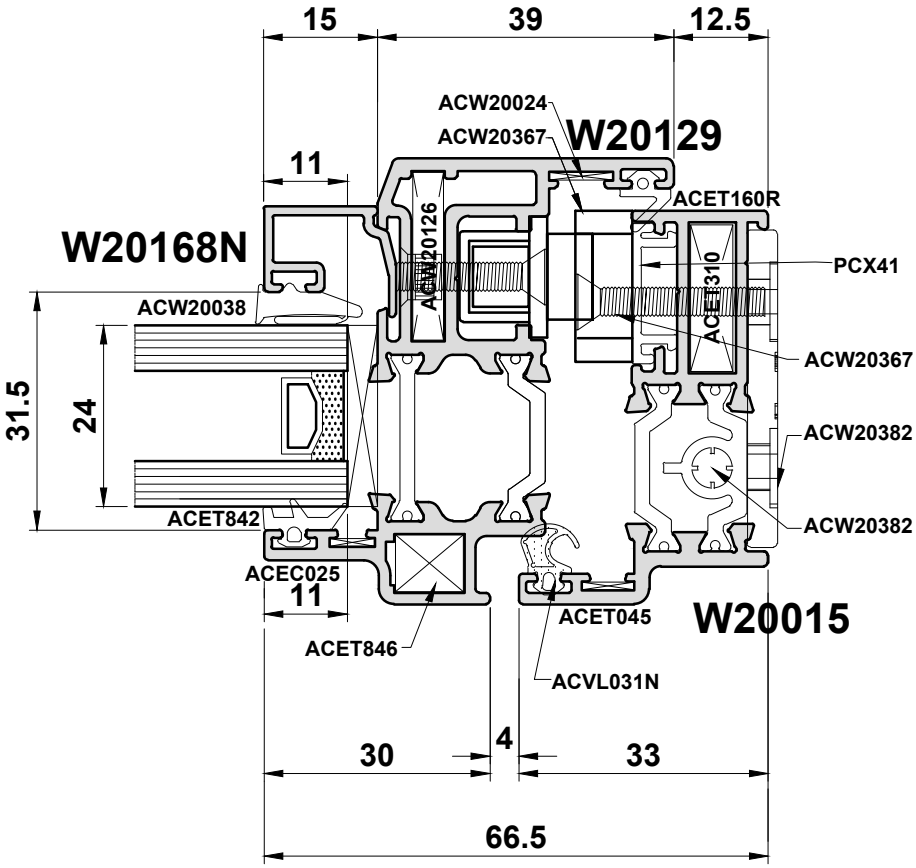


Do Not Scale From This Drawing

# Detail 27B

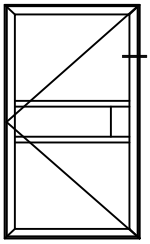

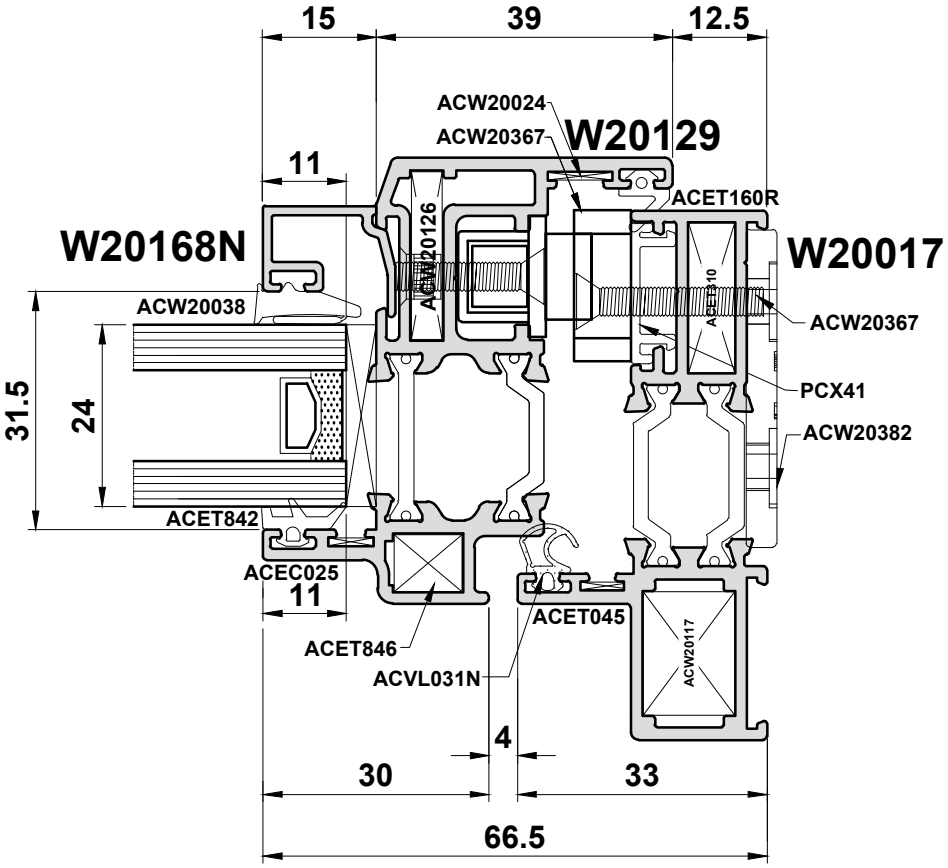


Do Not Scale From This Drawing

# Alitherm Heritage Door

## Detail 28A

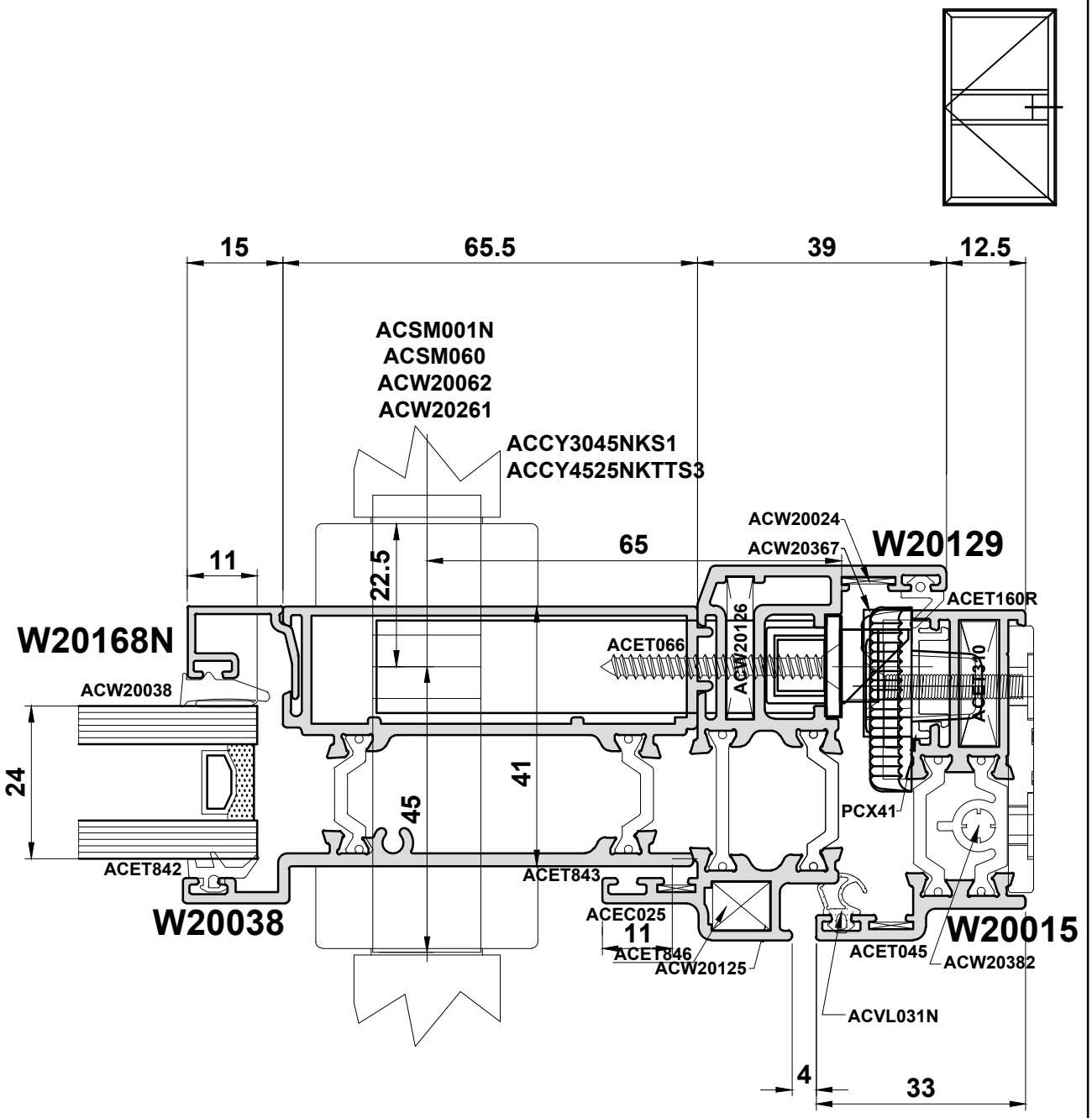


Do Not Scale From This Drawing

# Alitherm Heritage Door

## Detail 28B

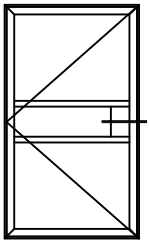

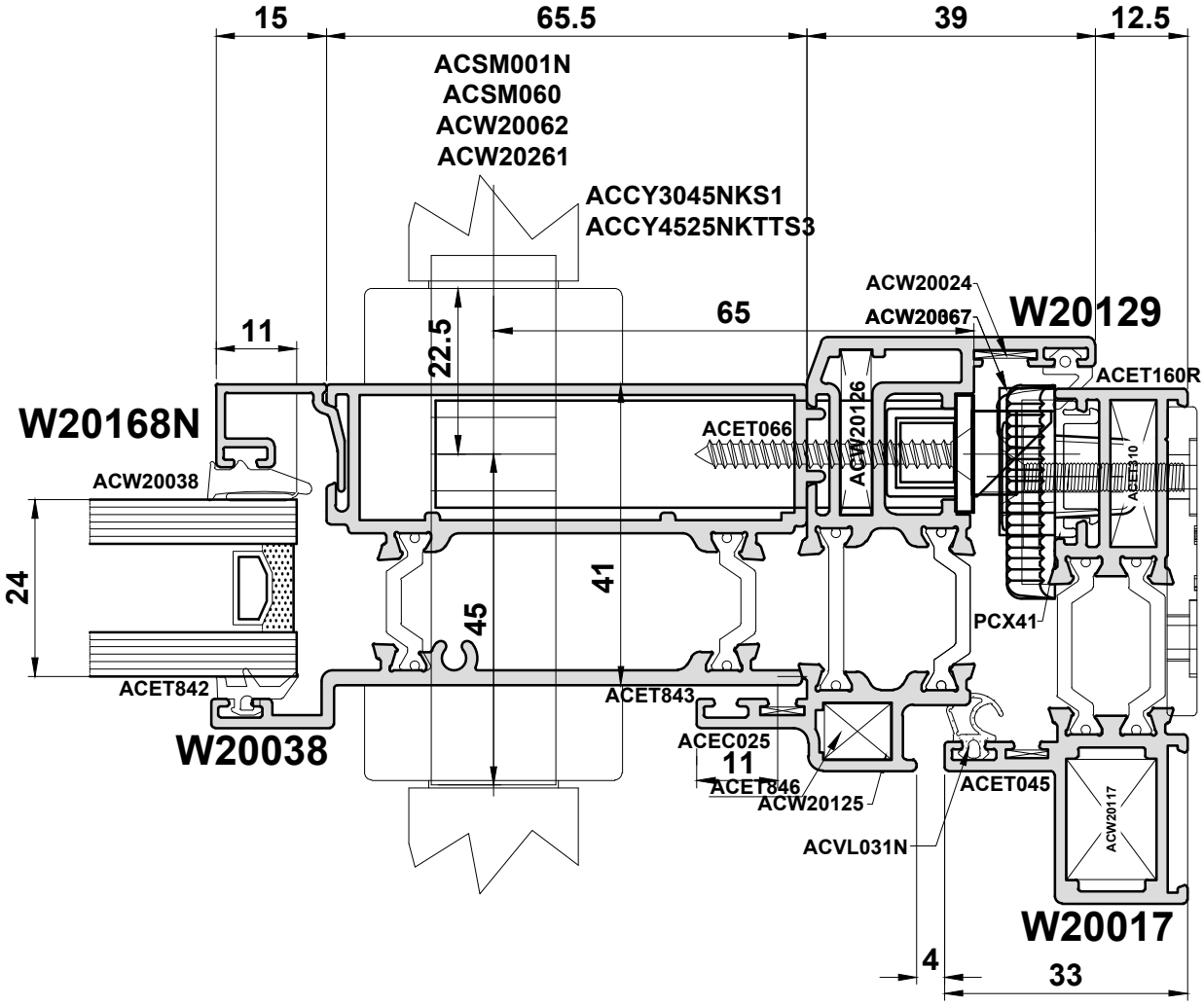


Do Not Scale From This Drawing

# Detail 29A

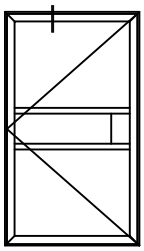

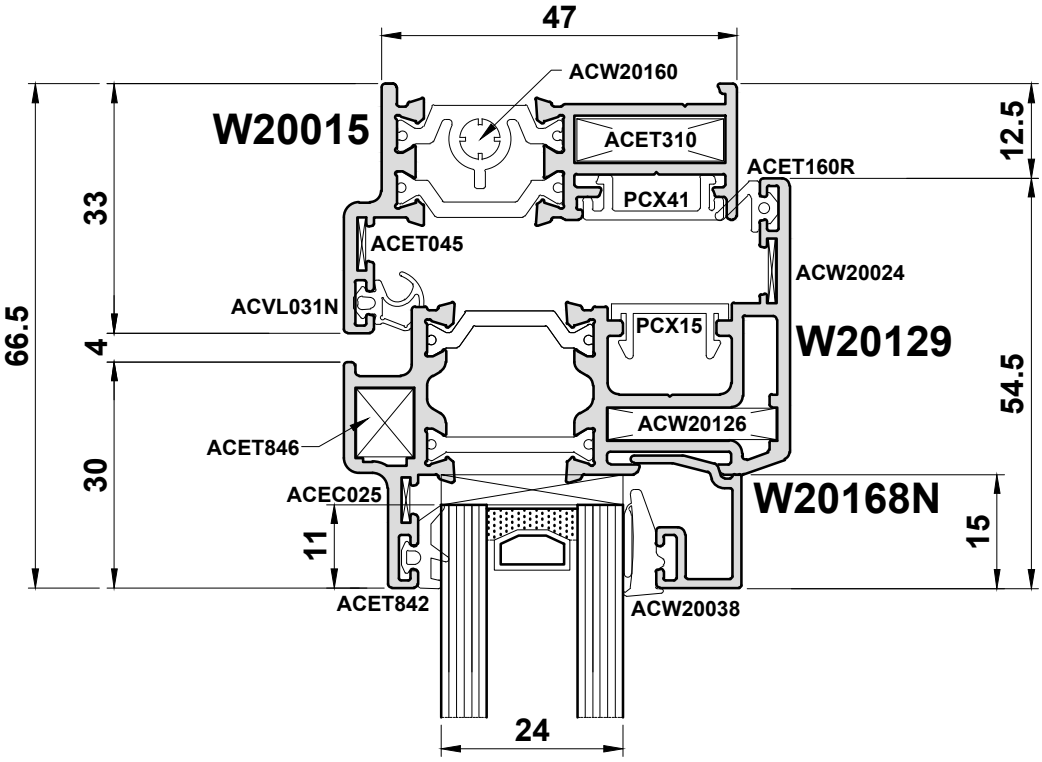


Do Not Scale From This Drawing

# Detail 29B

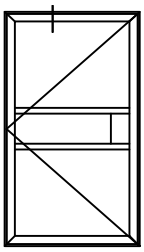

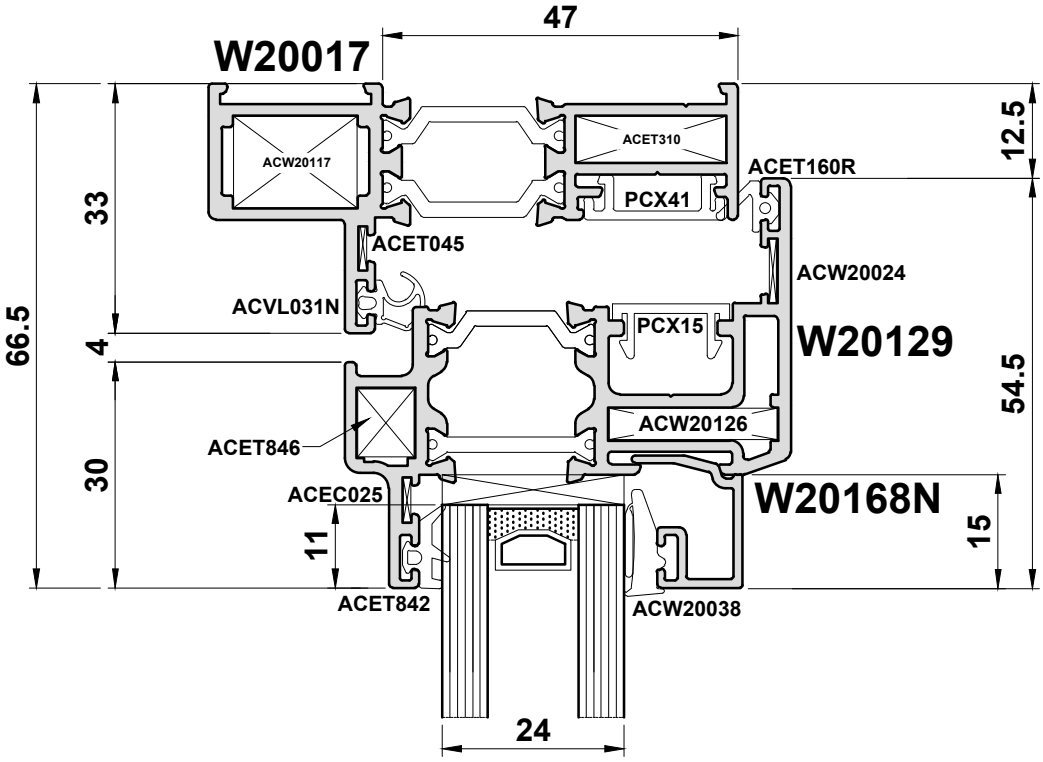


Do Not Scale From This Drawing

# Alitherm Heritage Door

## Detail 30A

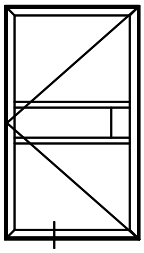

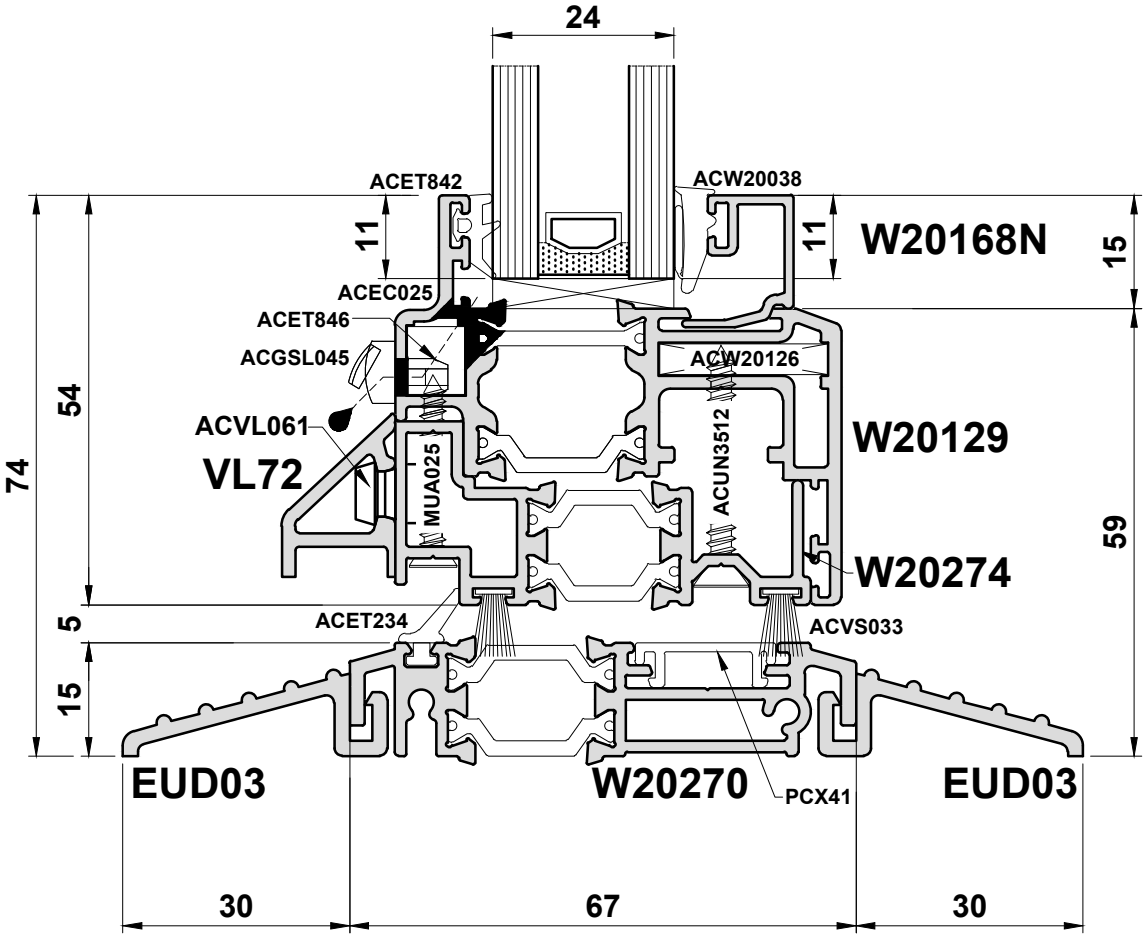


Do Not Scale From This Drawing



ISSUED: MAY 2021

# Alitherm Heritage Door

## Detail 30B

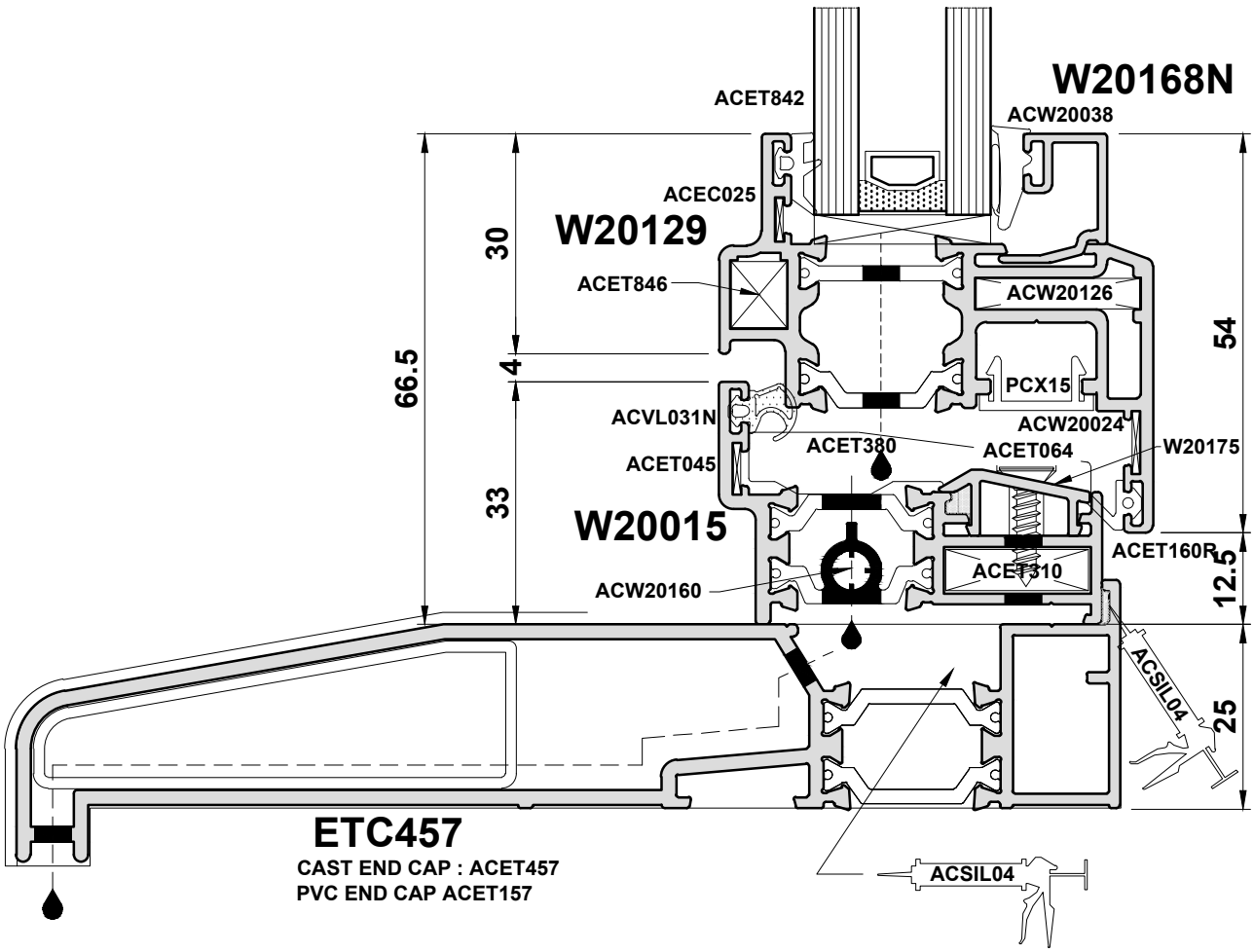


Do Not Scale From This Drawing

## Detail 30C

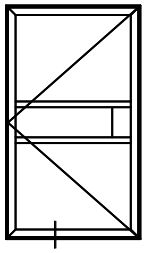

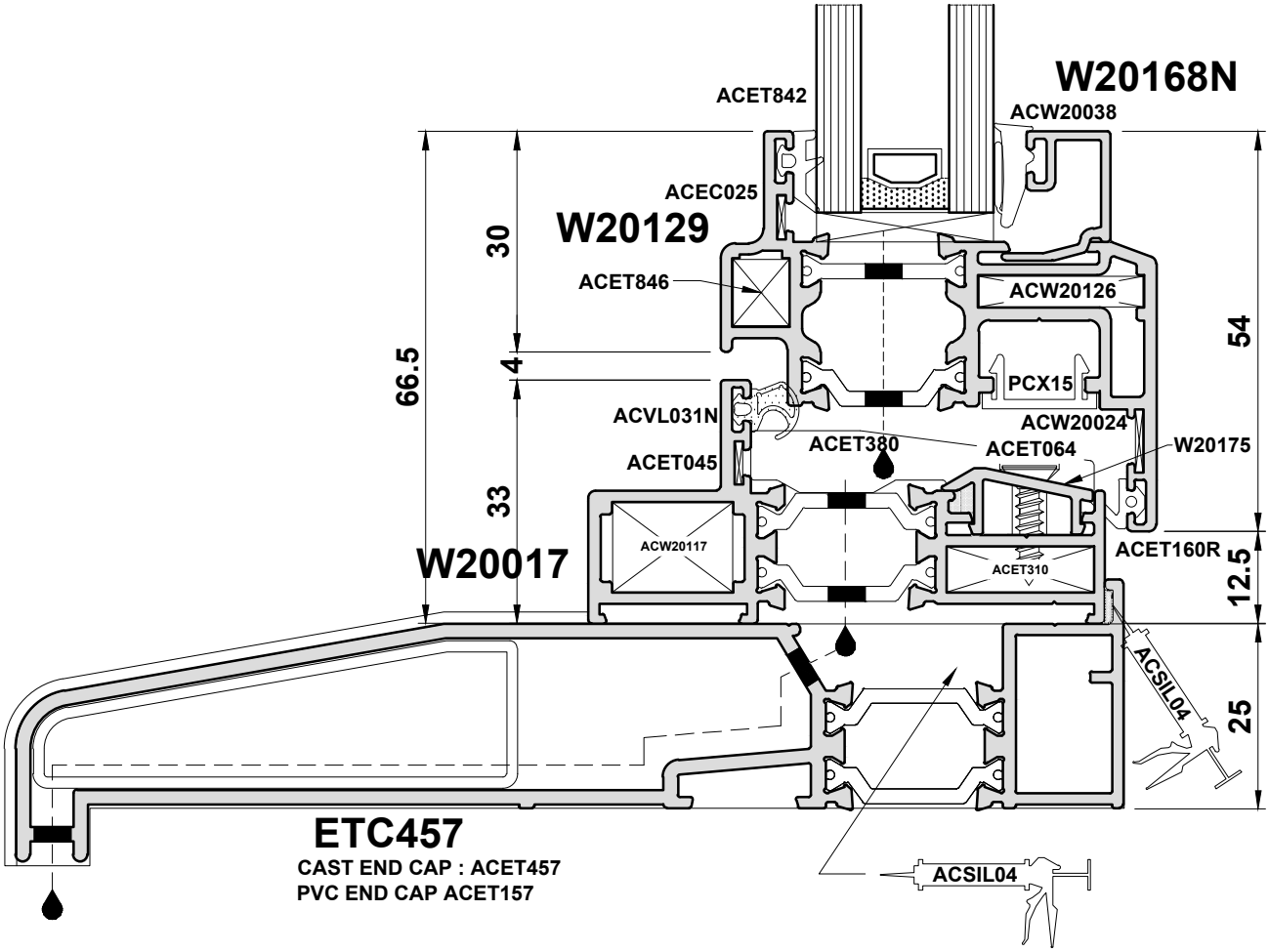


Do Not Scale From This Drawing

# Alitherm Heritage Door

## Detail 31

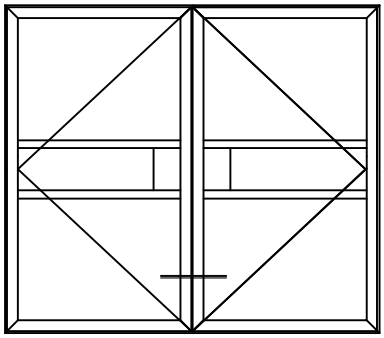

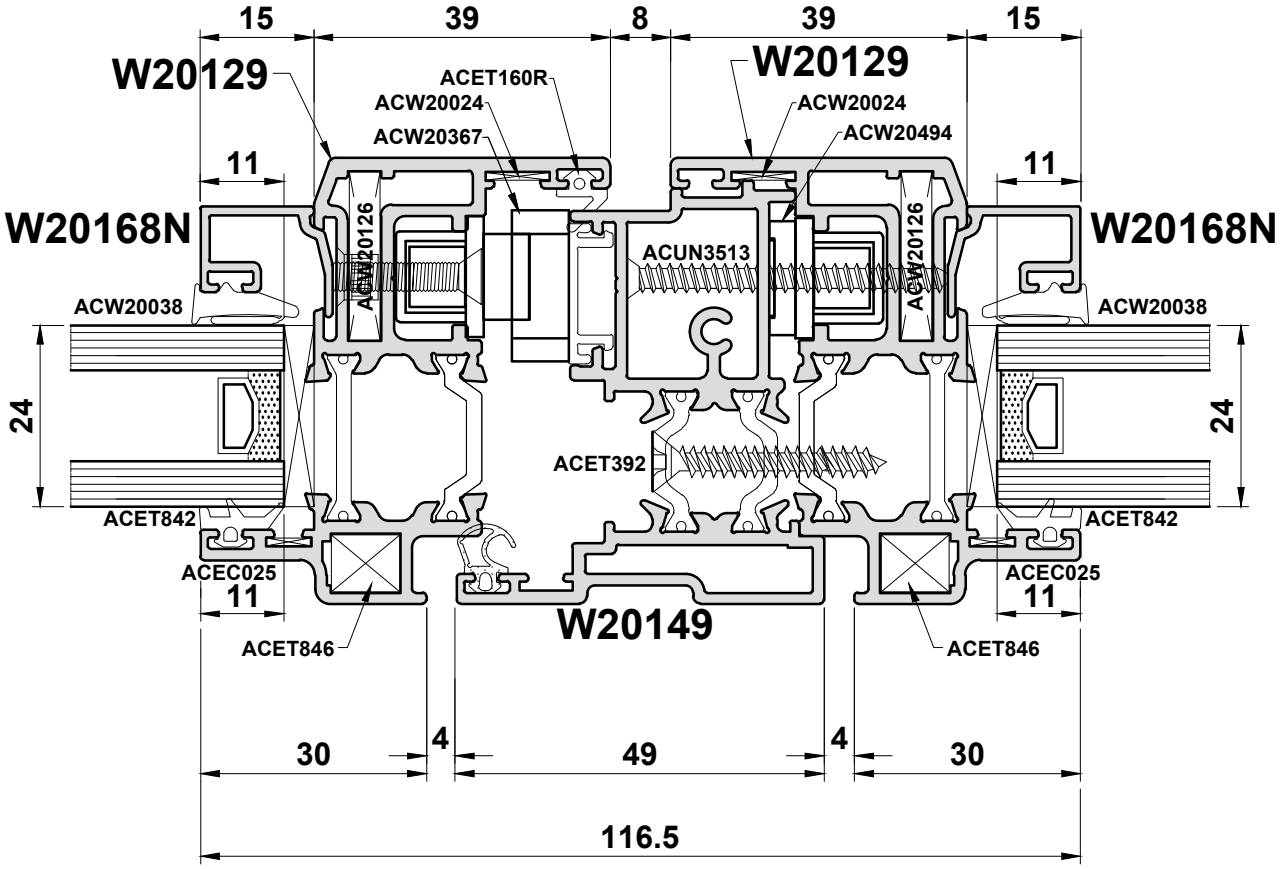


Do Not Scale From This Drawing

## Detail 32

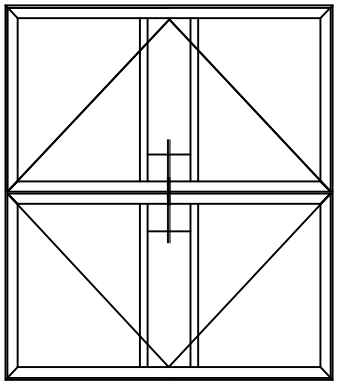

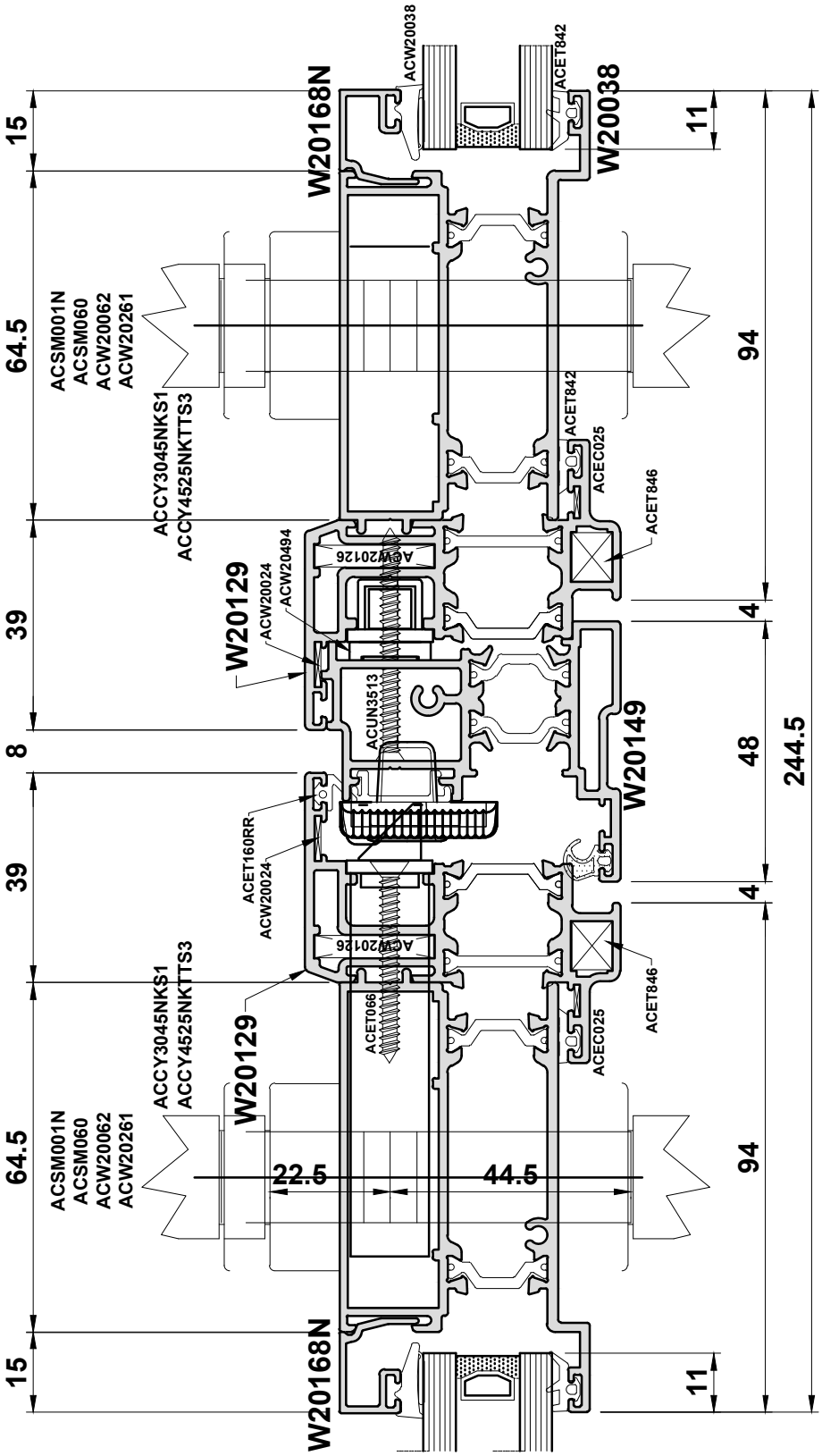


Do Not Scale From This Drawing

# Section D

## Statics

## Open Out & In

**General Size Limitations are shown on Page A03.**

**For Wind Loading Limitations, Please Contact The Technical Department - T: 01934 876100**

# Section E

E W

**Construction Drawings**

Corner Joint Details..... E03
Crimping Details..... E04
Cill Drainage..... E05
Angle Sub Cill..... E06

**Open Out**

Drainage Details..... E07 - E08
Single Lock Overview..... E09
Lock Details..... E10 - E13
Double Door Lock Overview..... E14
Double Door using W20048..... E15
W20124 Lock Selection..... E16
Double Door Thresholds Using W20046..... E17 - E18
Low Threshold ACW20270 Detail..... E19
Hinge Details..... E20 - E21
90° Restrictor Installation..... E22
PAS24 Full Requirements..... E23 - E24

## Corner Joint Details

**Notes**

1. Degrease mitre sections
2. Cover mitred faces with ACSIL04
3. Apply ACSIL013 to cleat chamber
4. Apply ACSIL04 to any fractures formed by crimping to make watertight

**Table 1**

| KL Colour | Sealant Part Number |
|---|---|
| Black | ACSIL04BL |
| White | ACSIL04WP |
| Clear | ACSIL04CL |
| KL001 | ACSIL04KL001 |
| KL002 | ACSIL04KL002 |
| KL003 | ACSIL04KL003 |
| KL004 | ACSIL04KL004 |
| KL005 | ACSIL04KL005 |
| KL006 | ACSIL04KL006 |
| KL007 | ACSIL04KL007 |
| KL010 | ACSIL04KL010 |
| KL011 | ACSIL04KL011 |
| KL012 | ACSIL04KL012 |
| KL013 | ACSIL04KL013 |

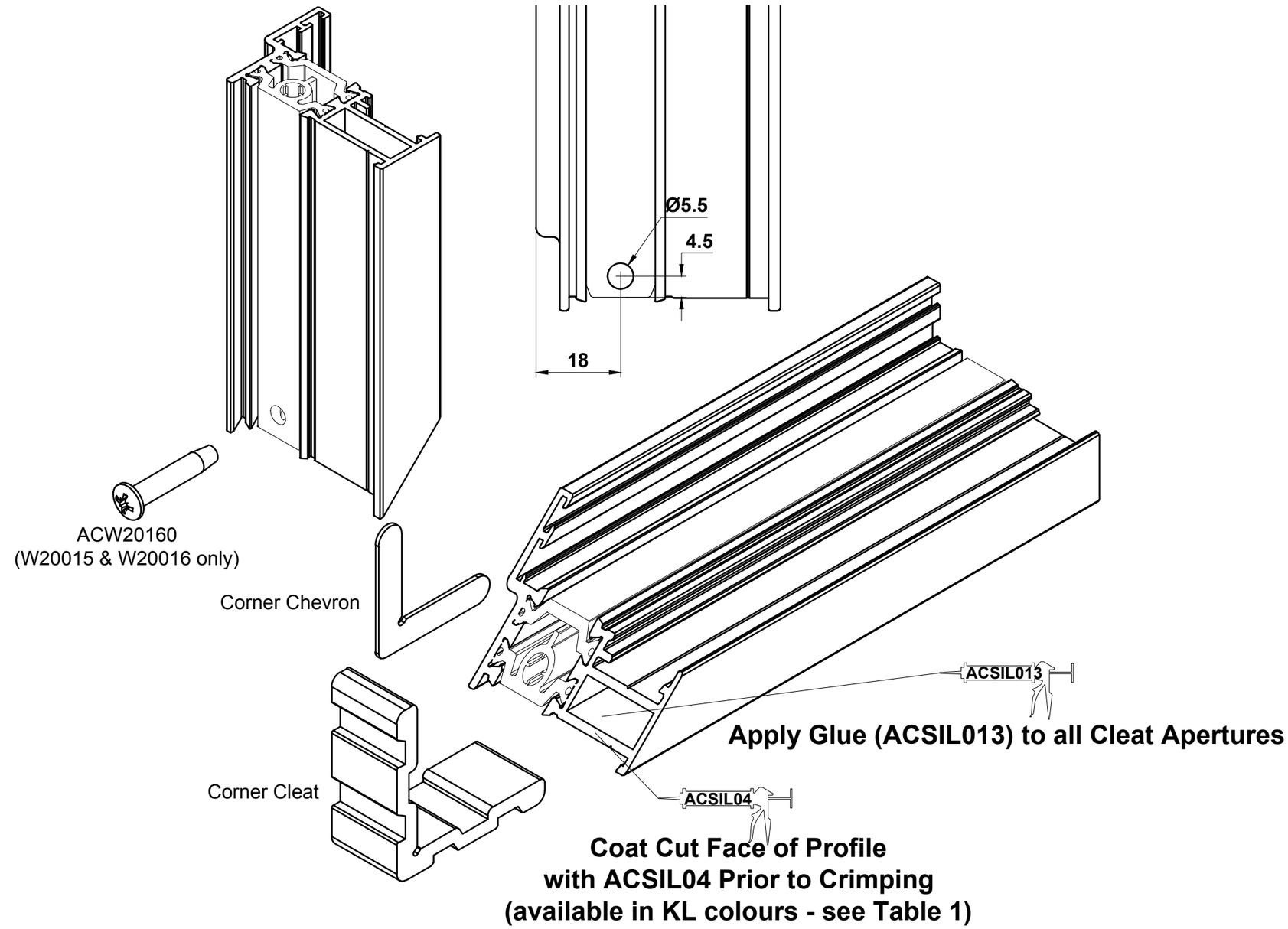


Do Not Scale From This Drawing

## Crimping Details

**Manual Crimper = WUT024HSZA**

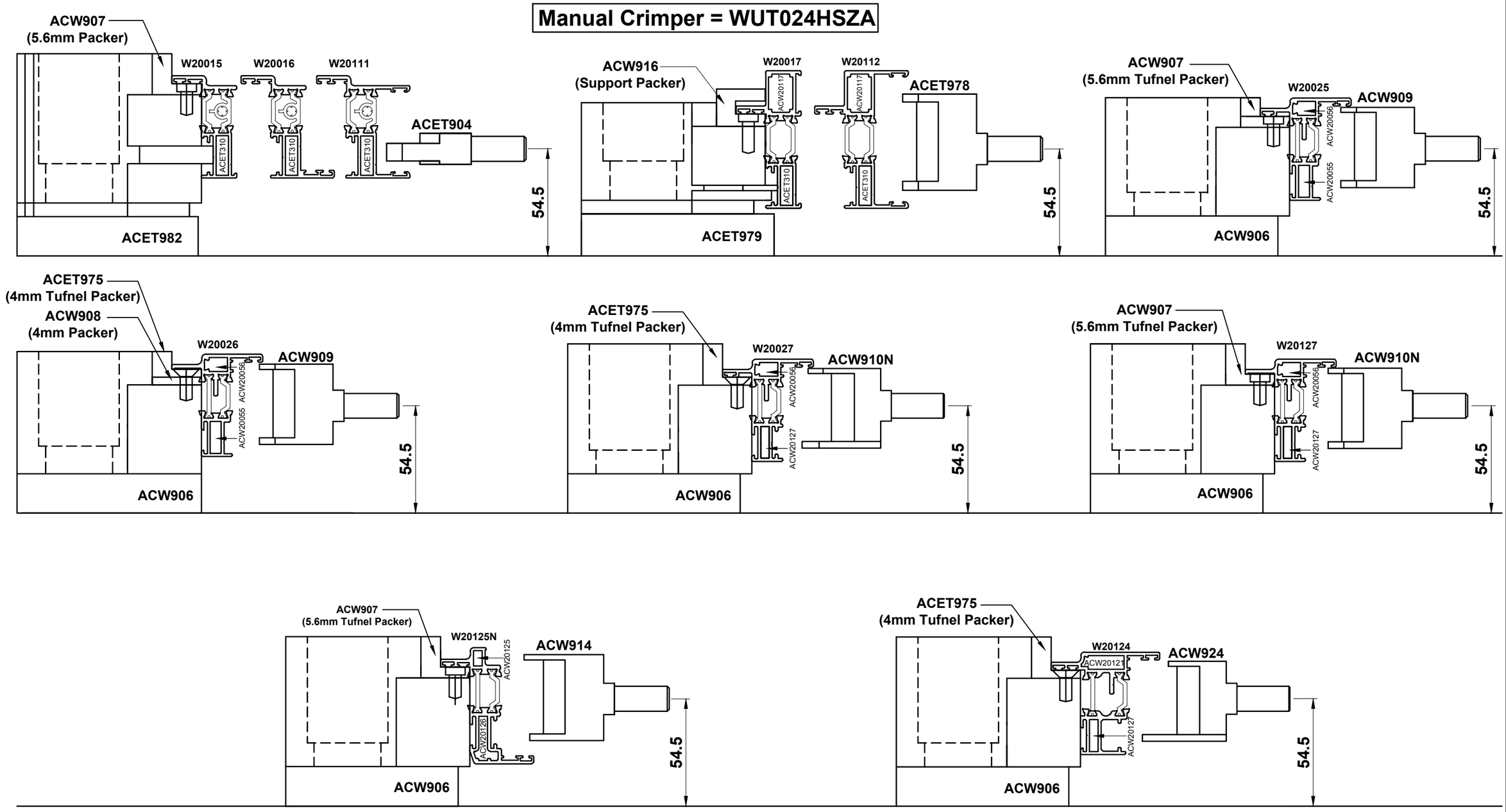


Do Not Scale From This Drawing

## Cill Drainage

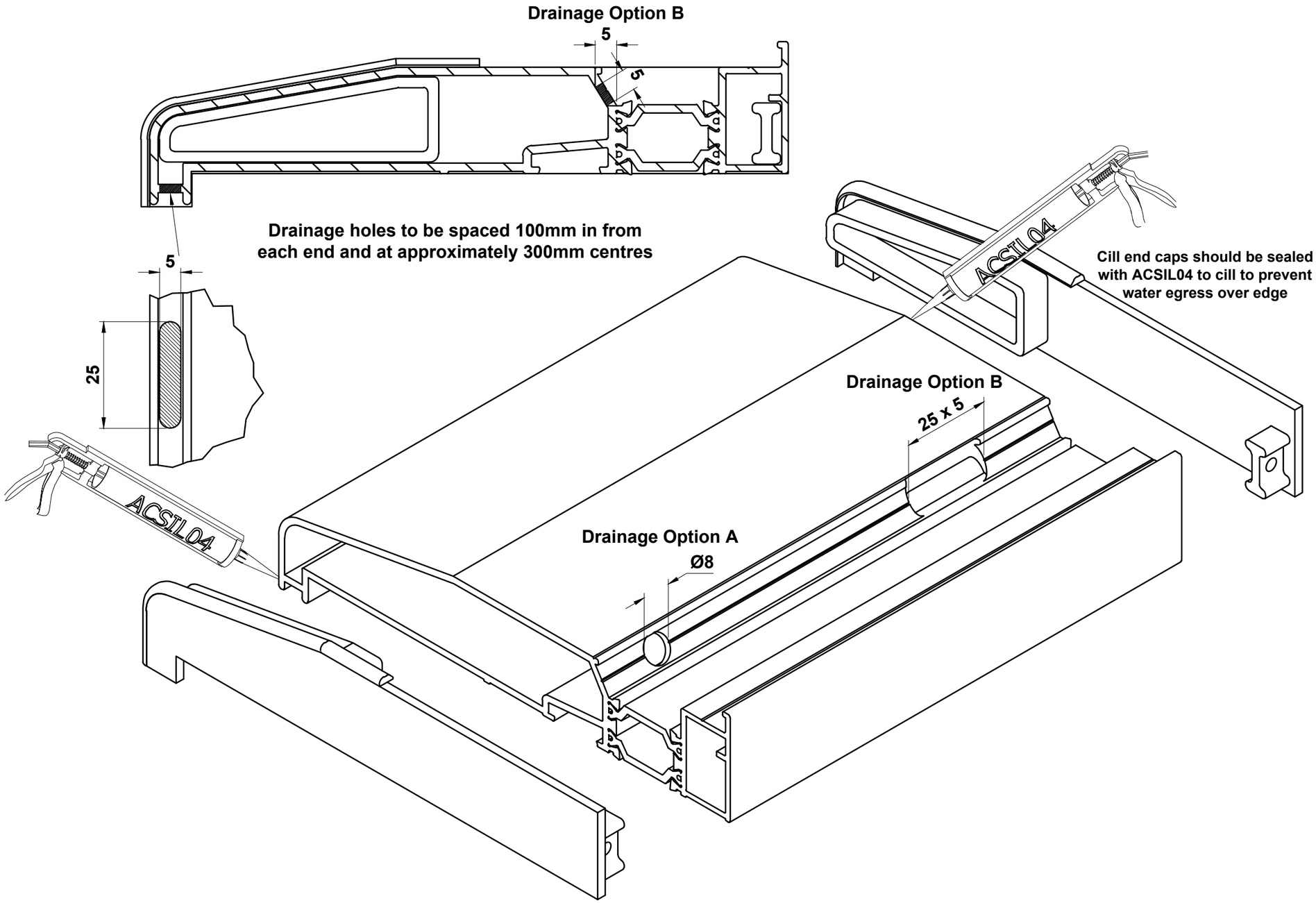


Do Not Scale From This Drawing

## Angled Sub Cill

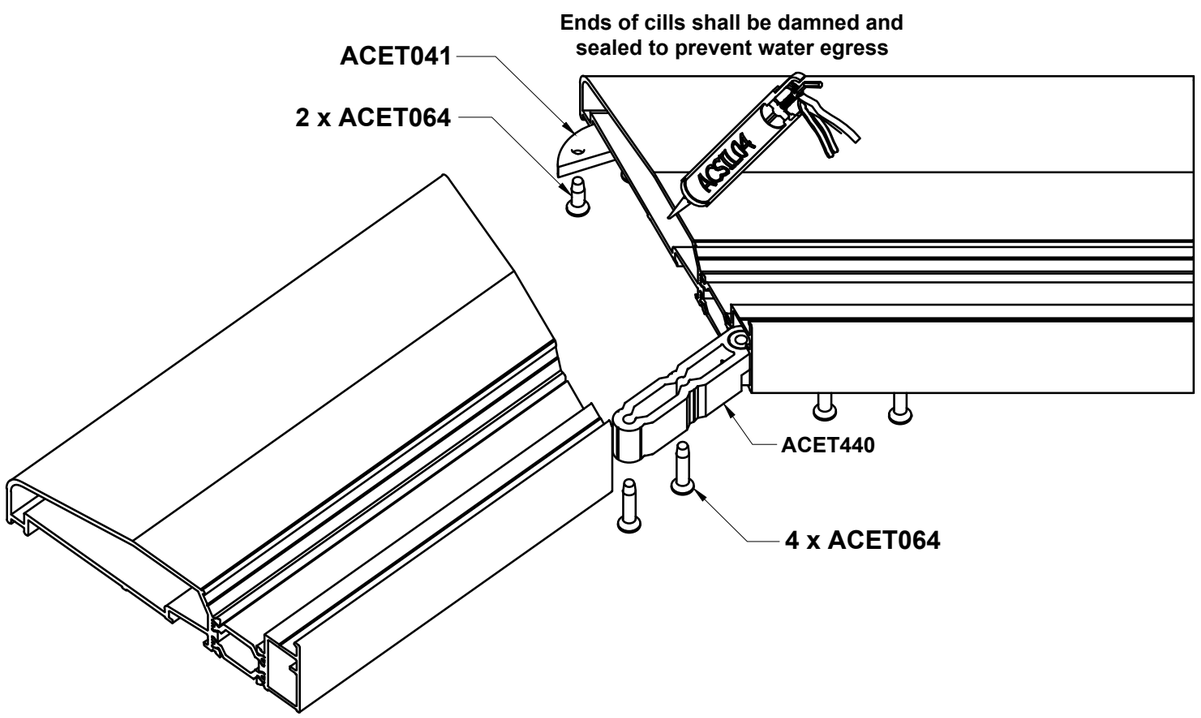


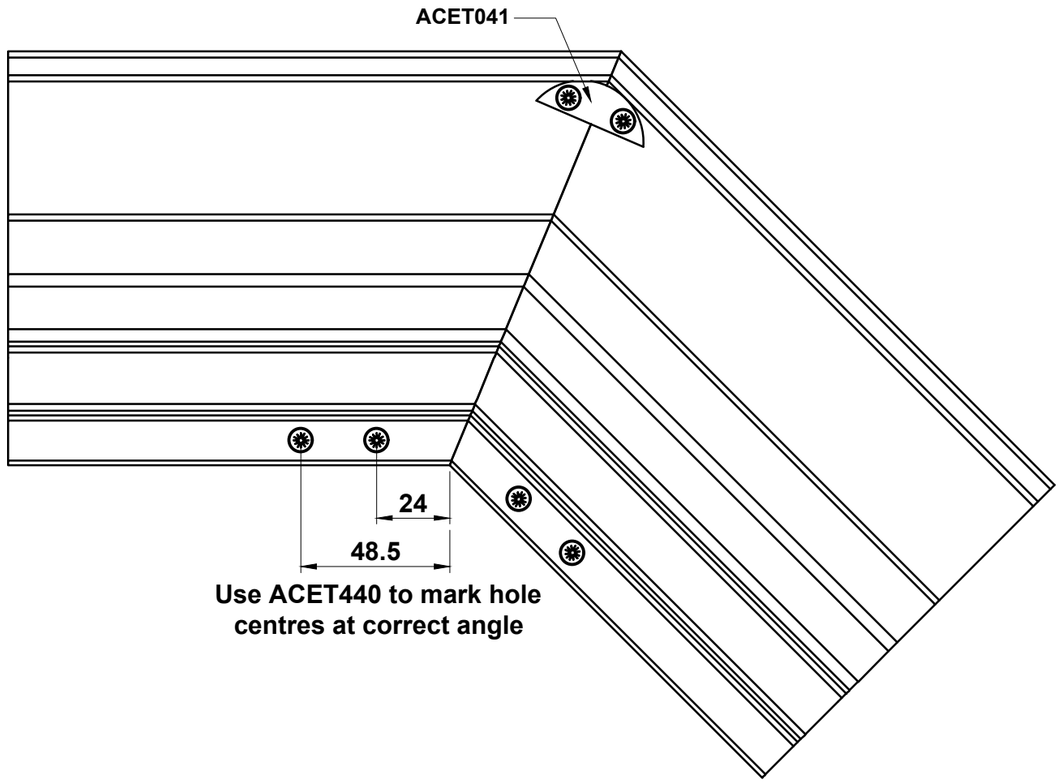


Do Not Scale From This Drawing

## W20027 Open Out Door Drainage Detail

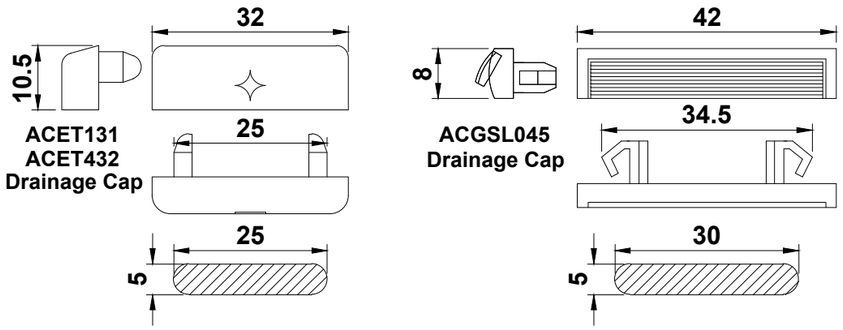


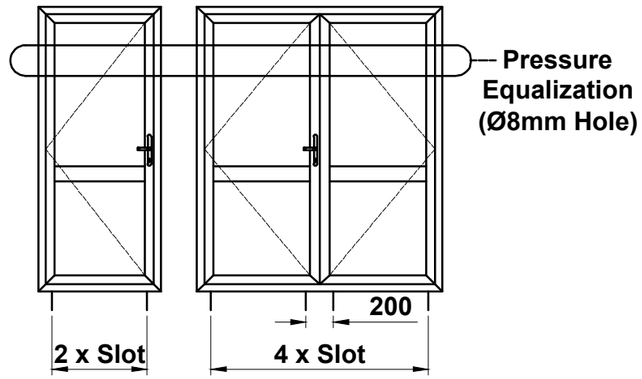


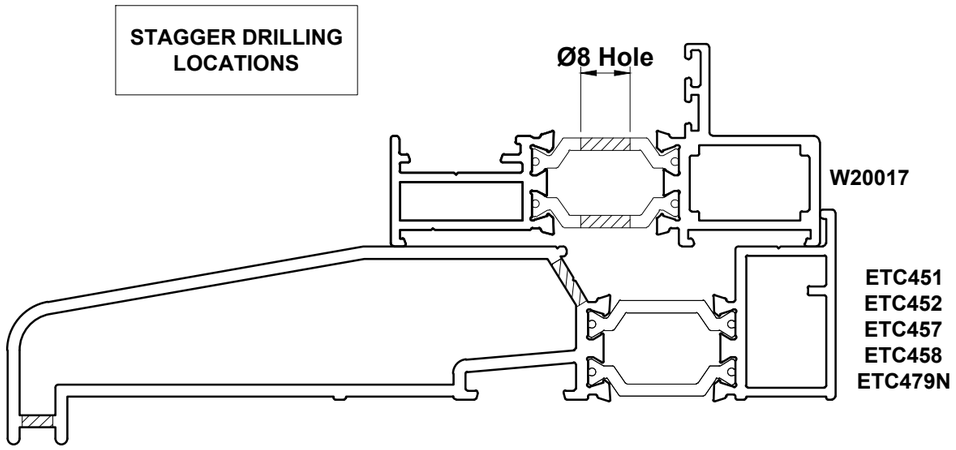


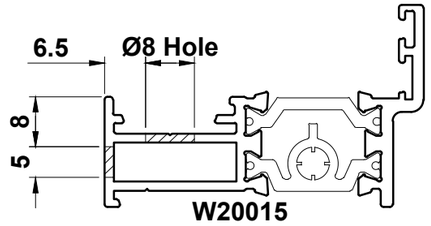


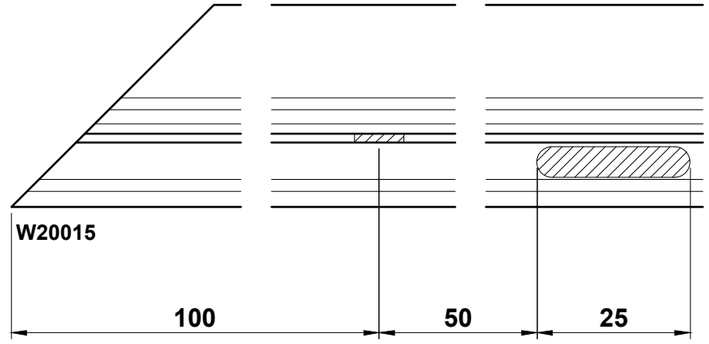


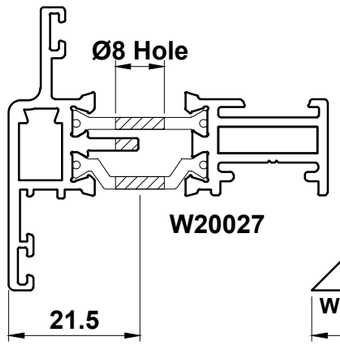


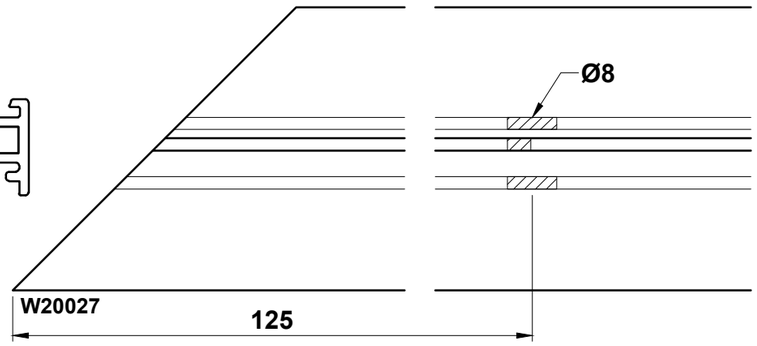


Do Not Scale From This Drawing

## W20124 Open Out Door Drainage Detail

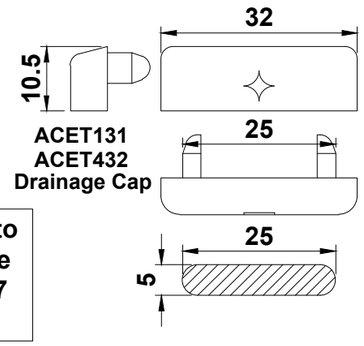


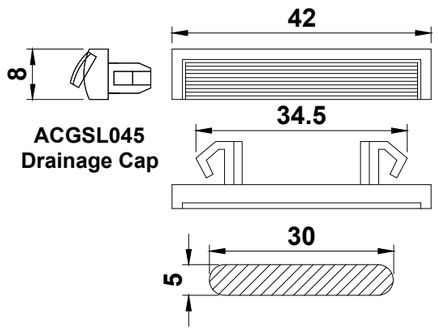


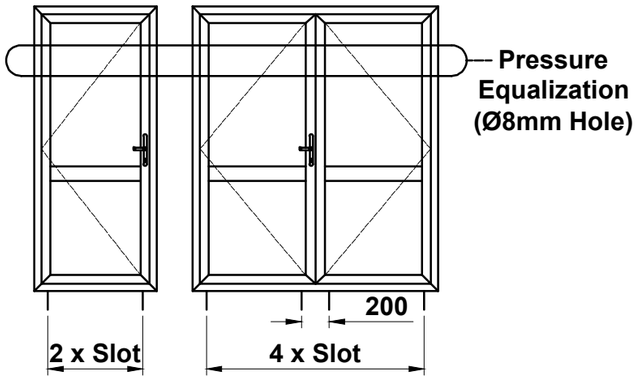


Note: Use ACW928 jig to drill 45° angled Ø5 hole and opened up to a Ø7 drainage hole.

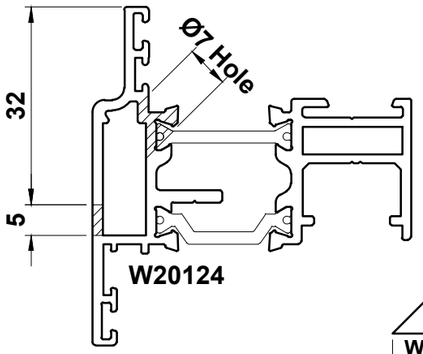


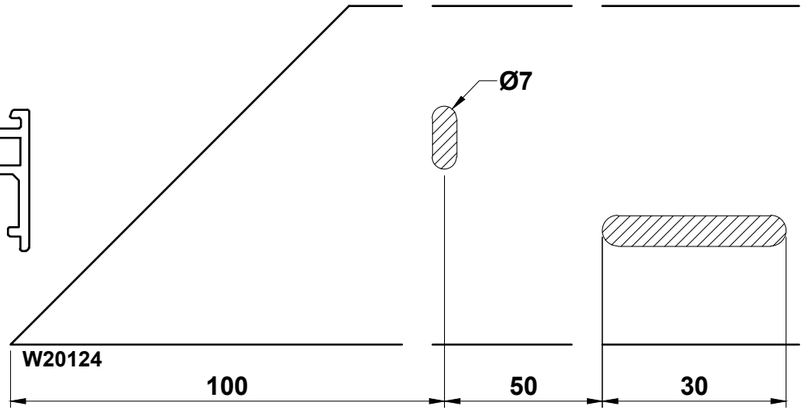


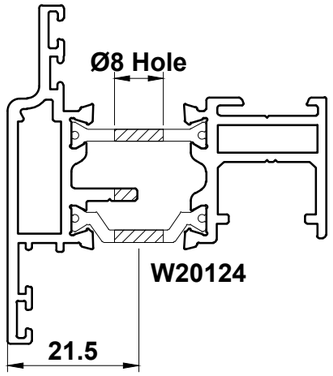


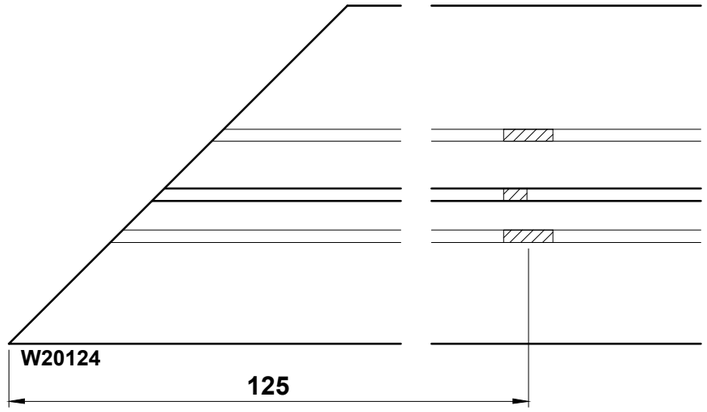


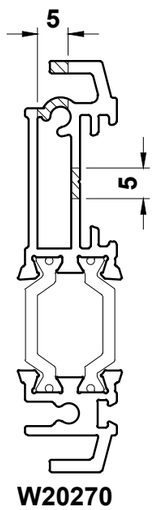


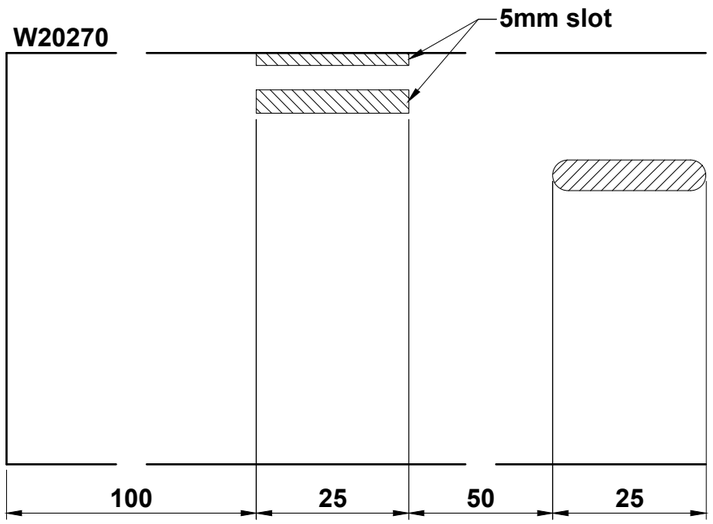


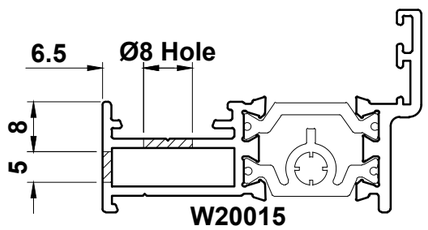


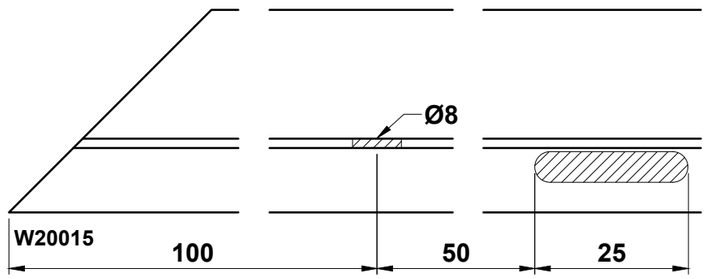


Do Not Scale From This Drawing

## Single Door Lock Overview

### W20027/W20127 Sash

| Lock | Accessories | Quantity |
|---|---|---|
| ACW20065 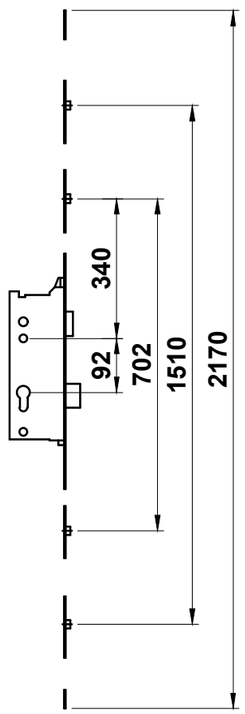  | ACCY4525NKTTS3 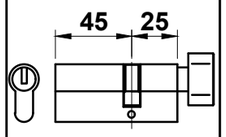  | 1 |
| | ACW20066 L/R 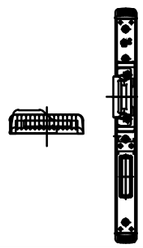 | 1 |
| | ACW20067 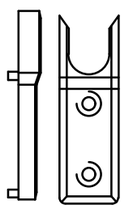 | 4 |

### W20124 Sash (PAS24 Option)

| Lock | Accessories | Quantity |
|---|---|---|
| ACW20465 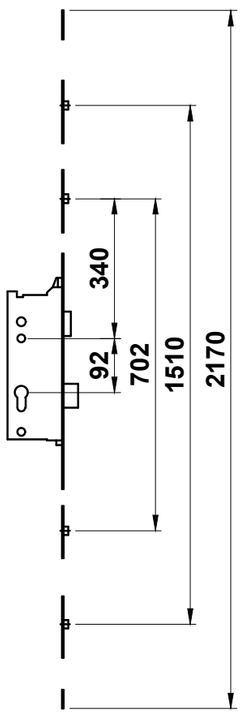  | ACCY4525NKTTS3 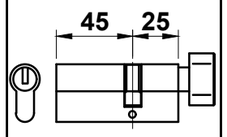  | 1 |
| | ACW20066 L/R 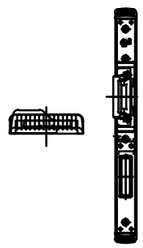 | 1 |
| | ACW20367 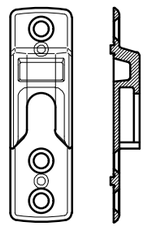 | 4 |

## W20027 Open Out Door Lock Preparation

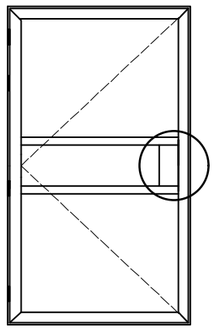

Drill Jig = ACW925/ACW927

Jig MUST be clamped in position before drilling

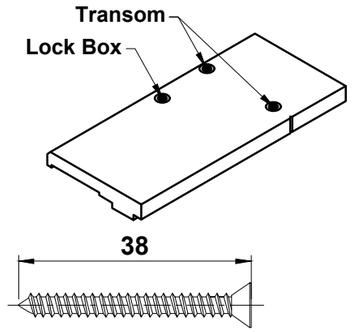


Use ACET066 screw to secure transoms/mullions

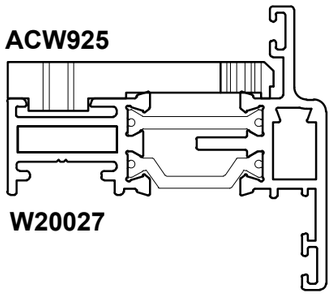


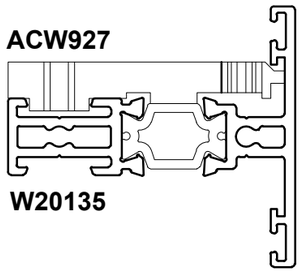


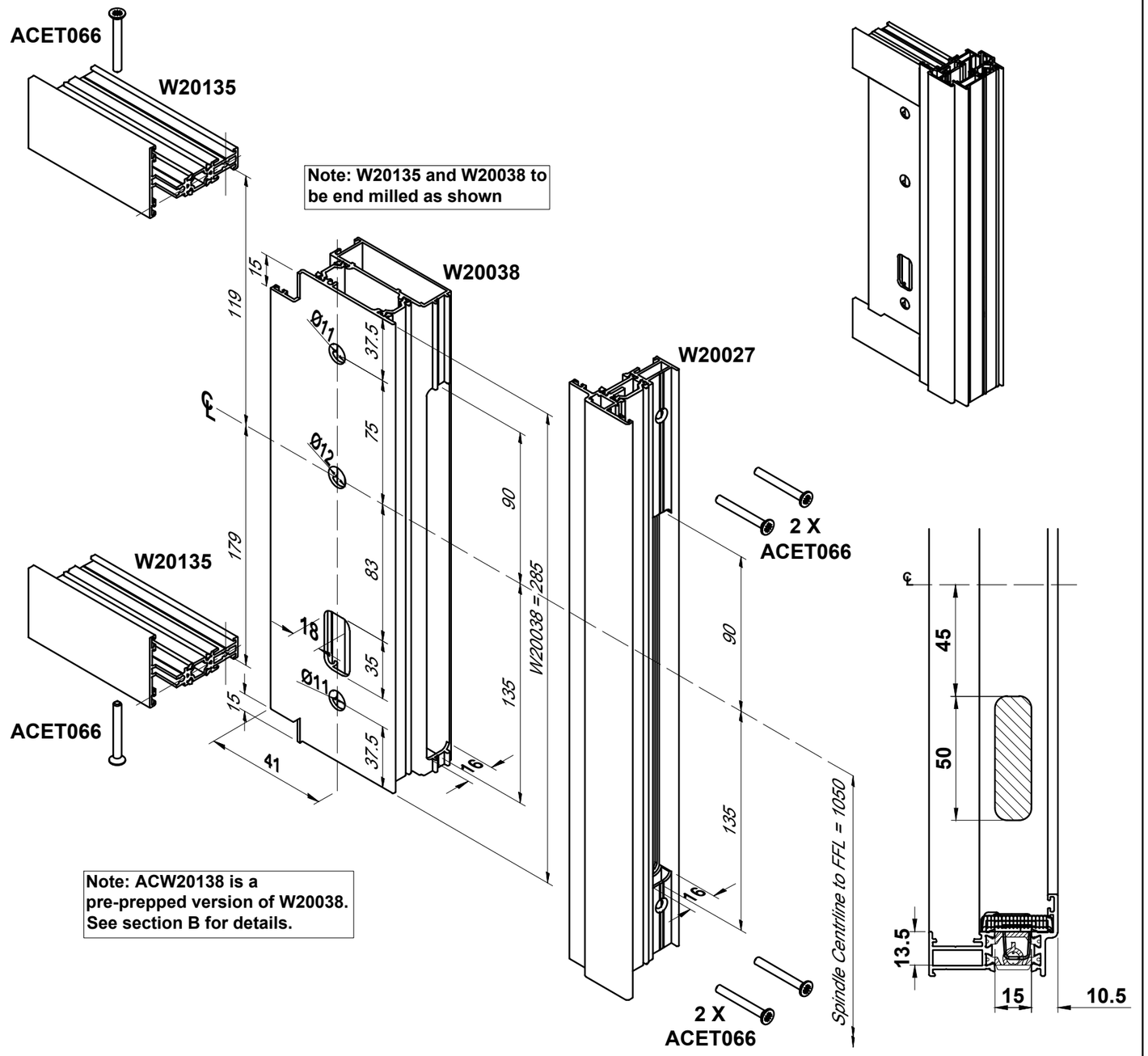


Do Not Scale From This Drawing

## W20027 Open Out Door Lock Preparation Continued

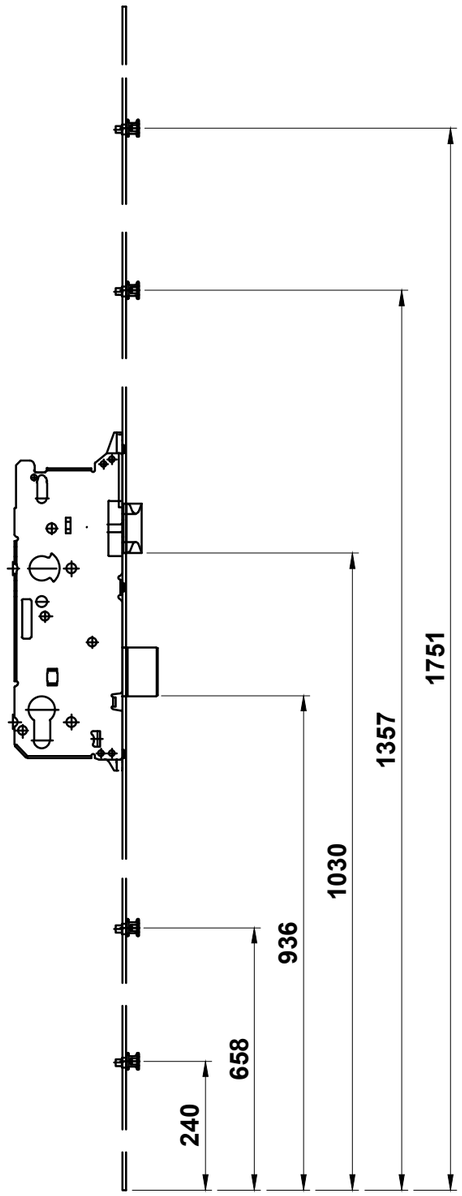


Locking Positions (in unlocked position)

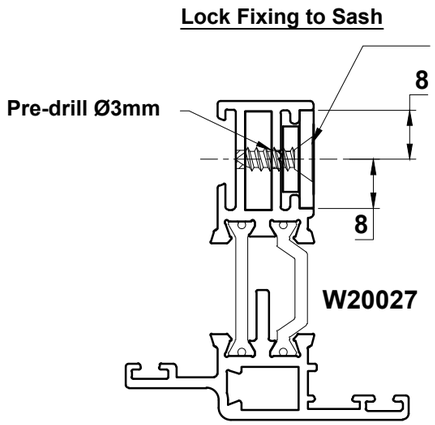


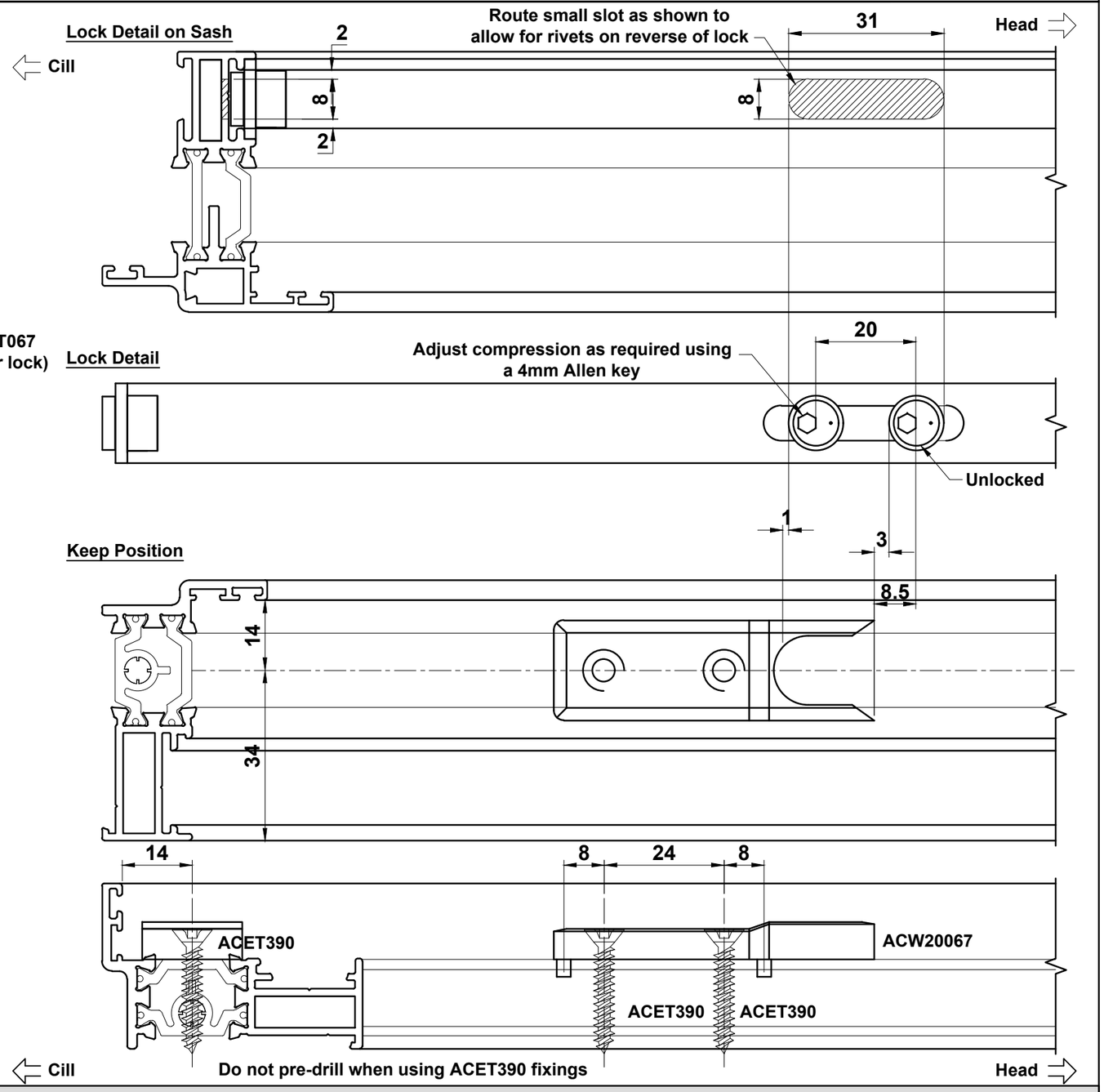

## W20124 Open Out Door Lock Preparation (PAS24 Option)

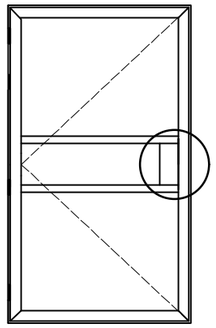

Drill Jig = ACW927
Jig MUST be clamped in position before drilling

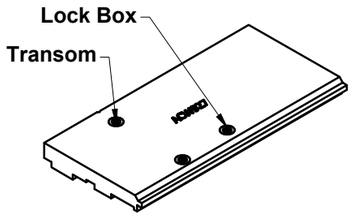


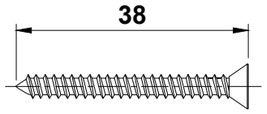


Use ACET066 screw to secure transoms/mullions

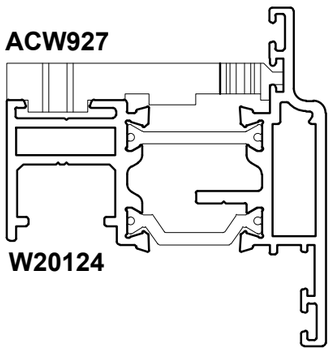


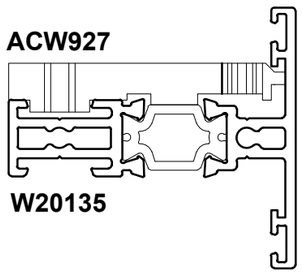


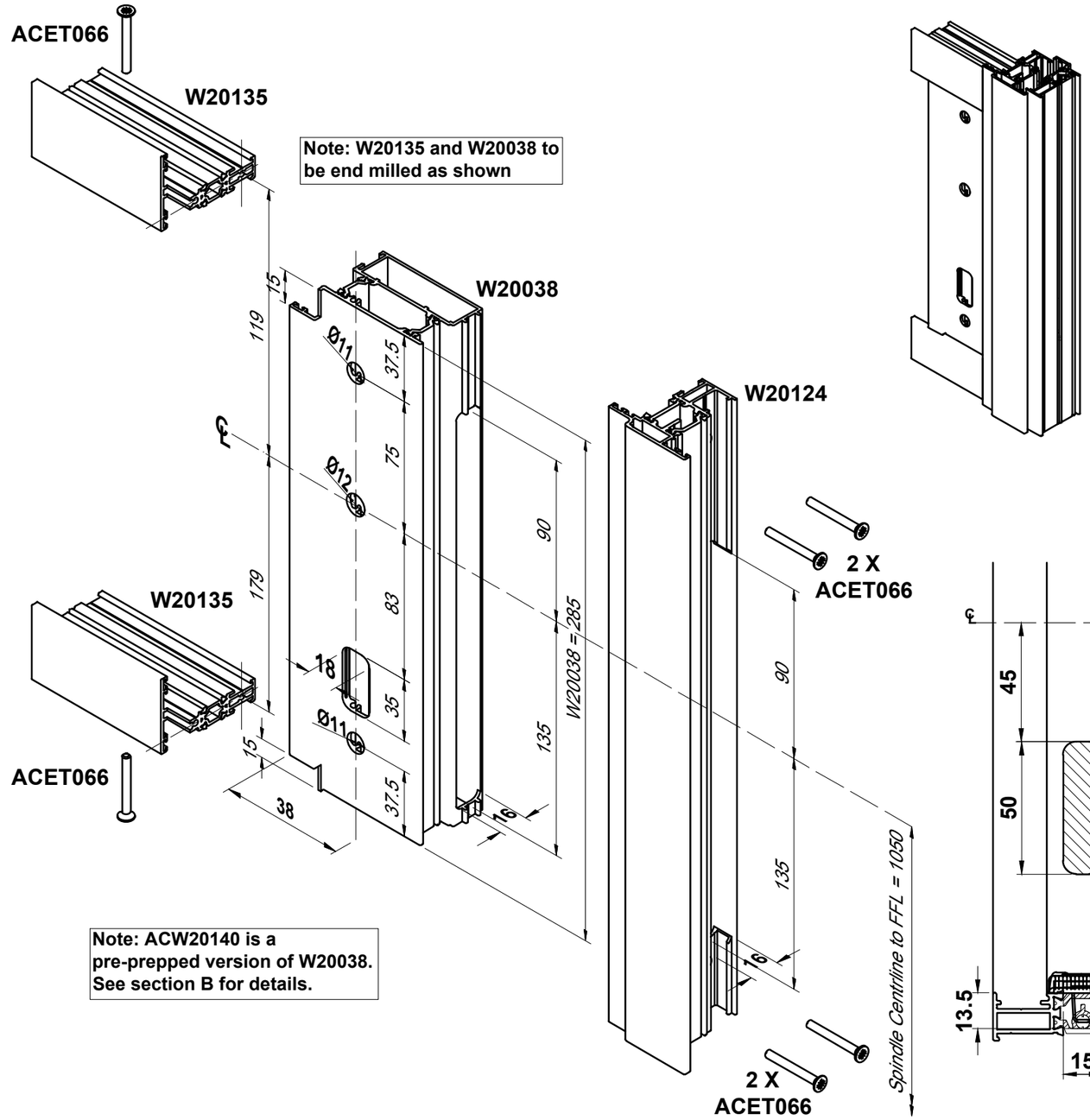


Do Not Scale From This Drawing

## W20124 Open Out Door Lock Preparation (PAS24 Option) Continued

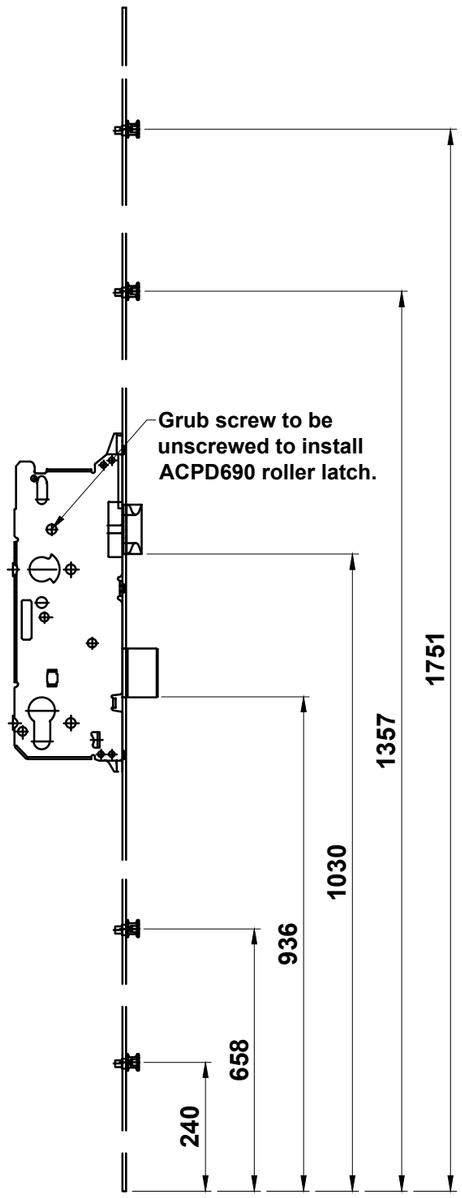


Locking Positions (in unlocked position)

Lock Fixing to Sash

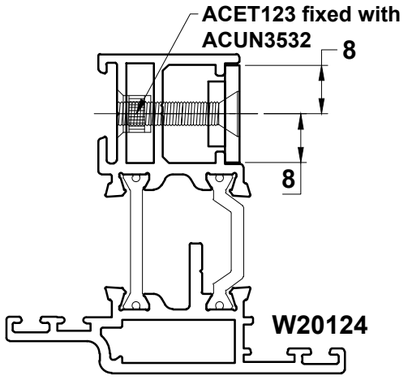


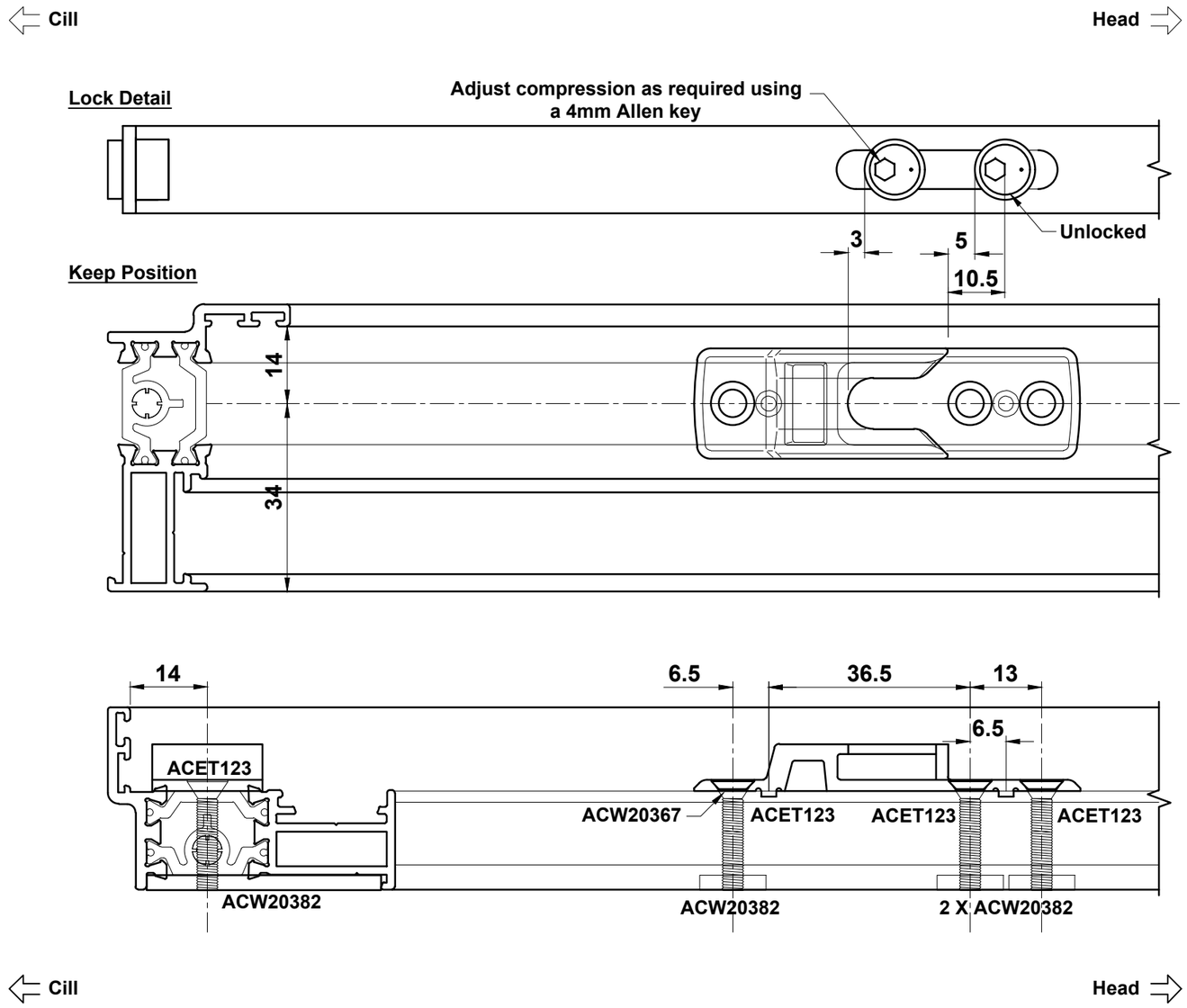

## Double Door Lock Overview

### W20027 Sash

| Lock | Accessories | Quantity |
|---|---|---|
| ACW20065 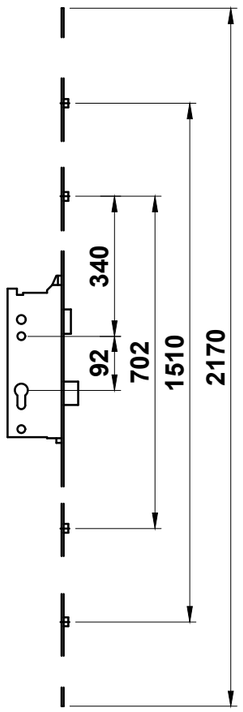  | ACCY4525NKTTS3 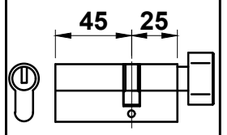  | 1 |
| | ACVL432 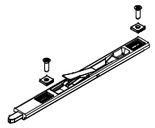 | 2 |
| | ACW20066 L/R 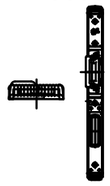 | 1 |
| | ACW20067 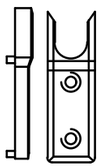 | 4 |
| | ACW20432 | 2 |

### W20124 Sash (PAS24 Option)

| Lock | | Accessories | Quantity |
|---|---|---|---|
| ACW20465 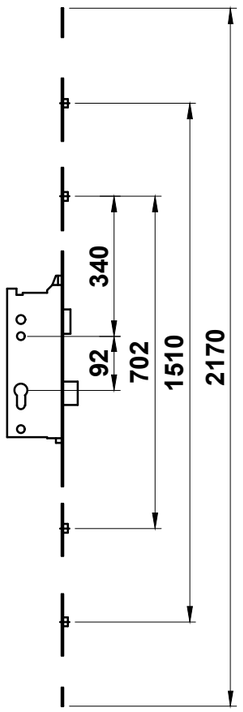  | ACW20466 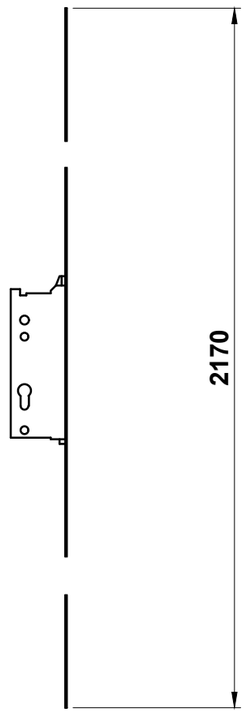  | ACCY4525NKTTS3 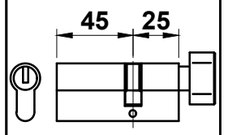  | 1 |
| | | ACDV737/ACDV738 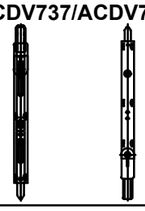 | 2 / 2 |
| | | ACW20066 L/R 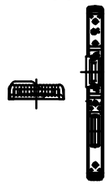 | 1 |
| | | ACW20367 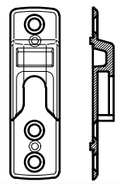 | 4 |
| | | ACW20437 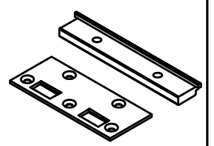 | 2 |

**Do Not Scale From This Drawing**

## Open Out Double Door using W20048

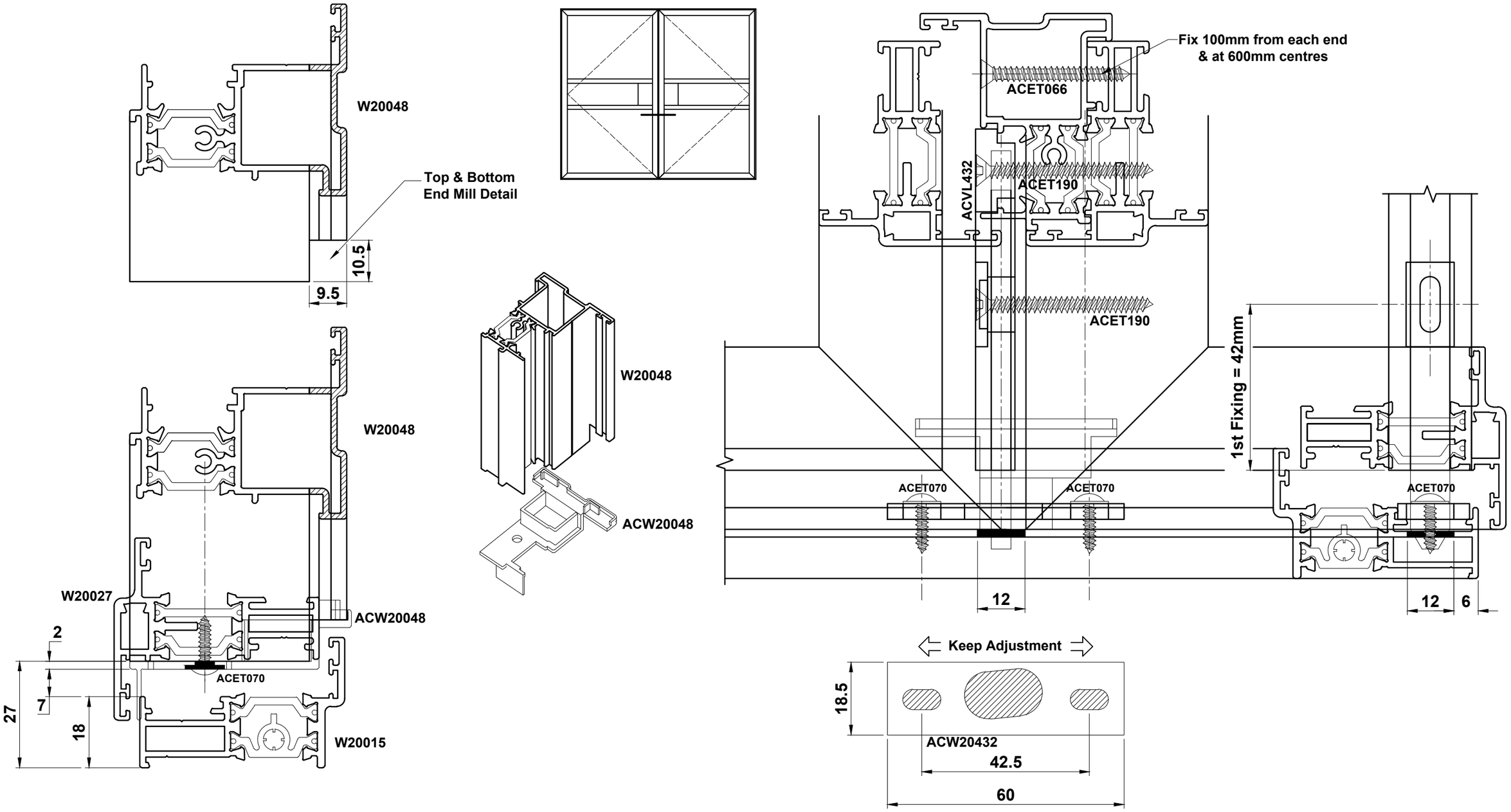


**Do Not Scale From This Drawing**

## W20124 Open Out Lock Selection with Shootbolts (PAS24 Option)

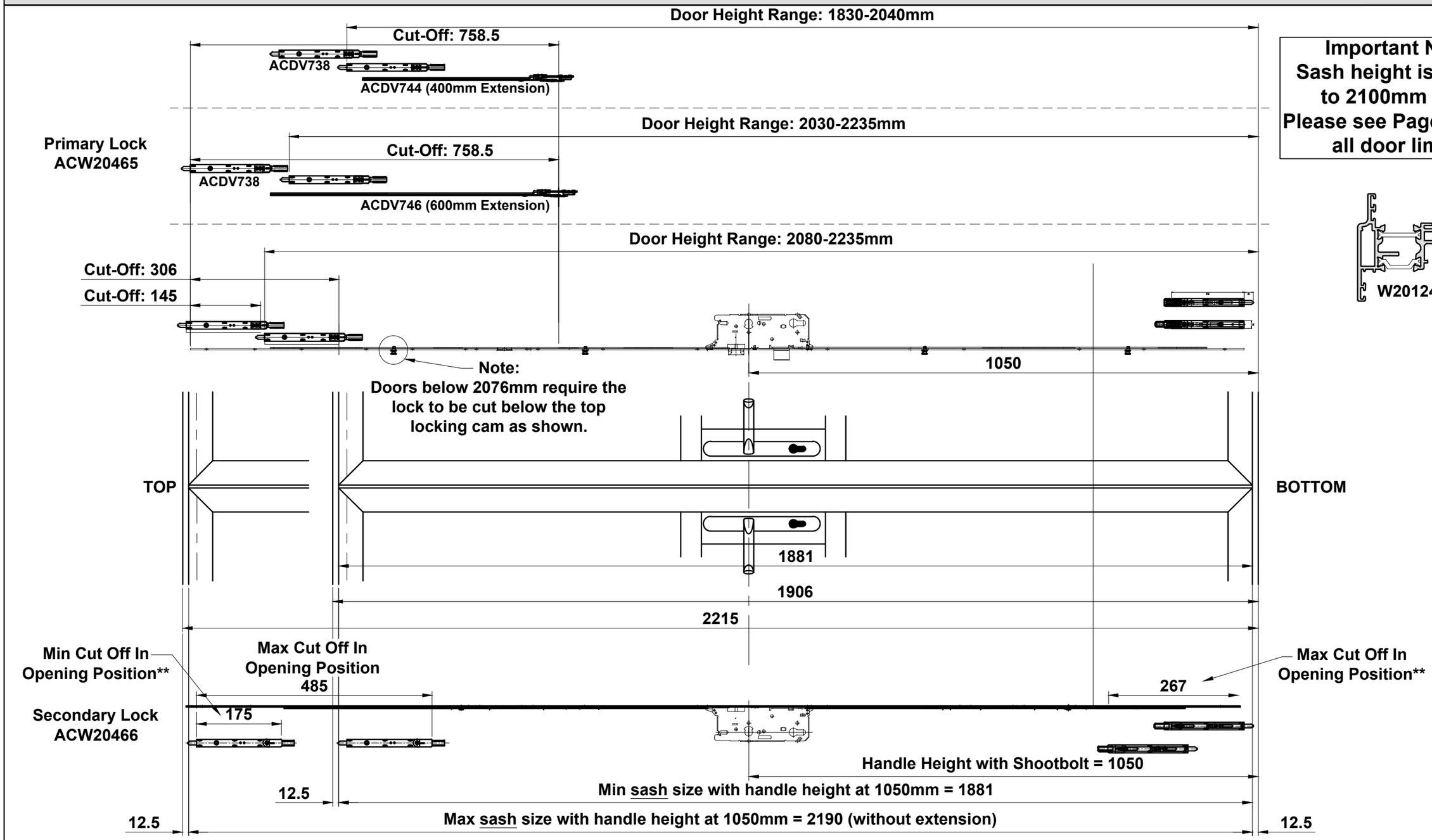


**Important Note:**
**Sash height is limited to 2100mm high.**
**Please see Page A04 for all door limits.**

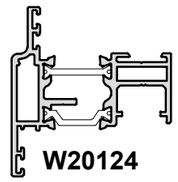


Do Not Scale From This Drawing

## Open Out Double Door Standard Threshold Using W20046 (PAS24 Option)

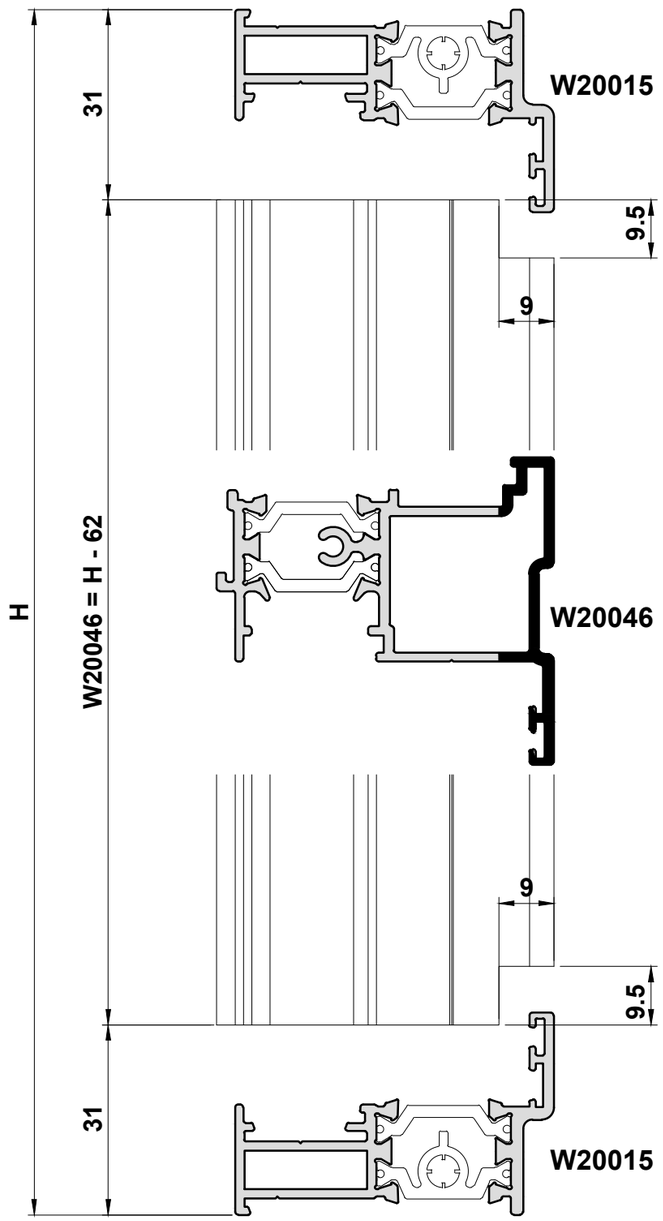


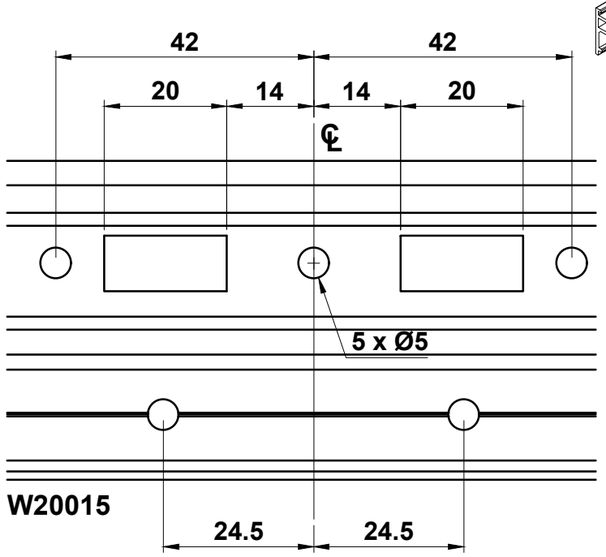


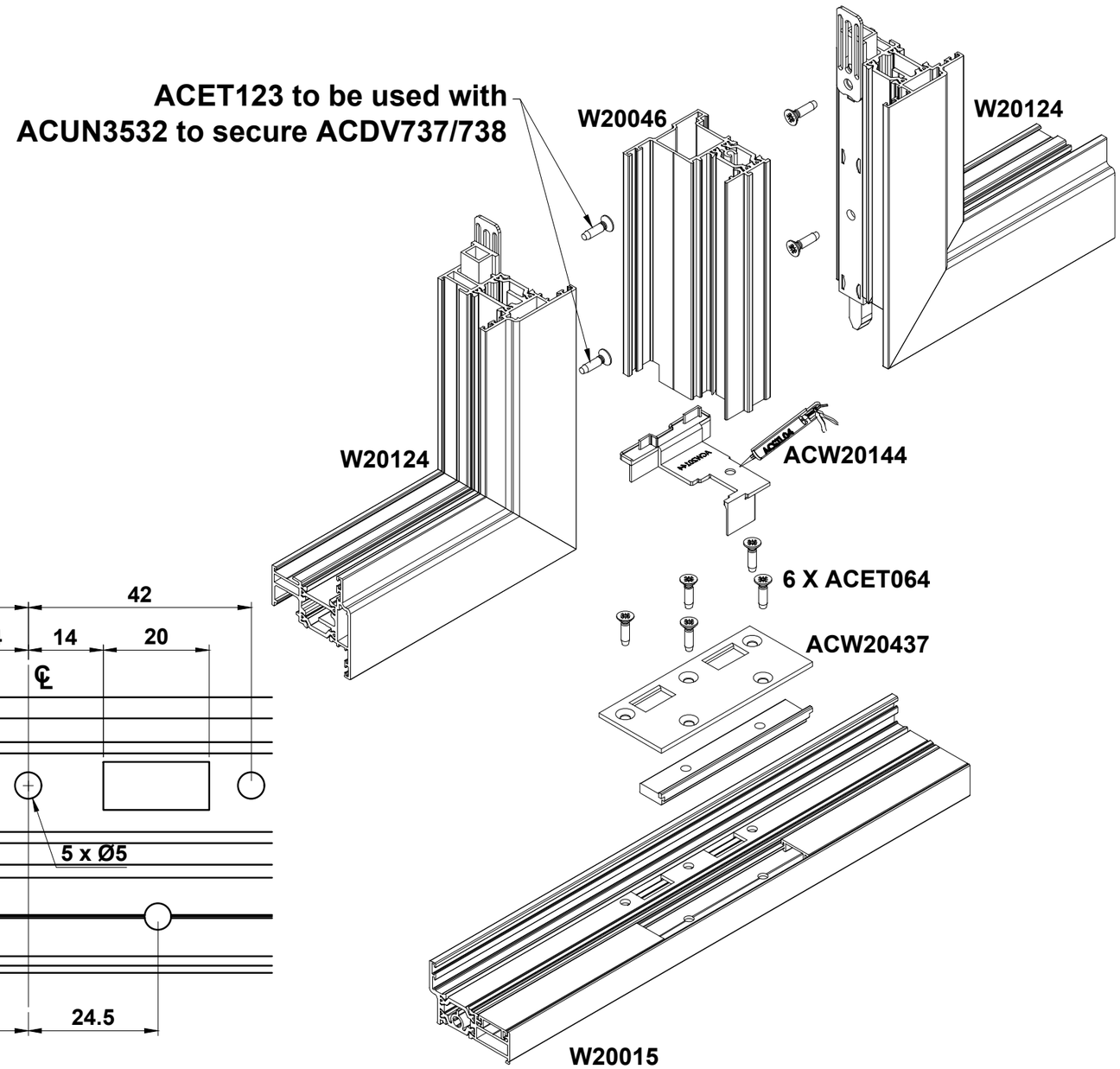


Do Not Scale From This Drawing

## Open Out Double Door Low Threshold Using W20046 (PAS24 Option)

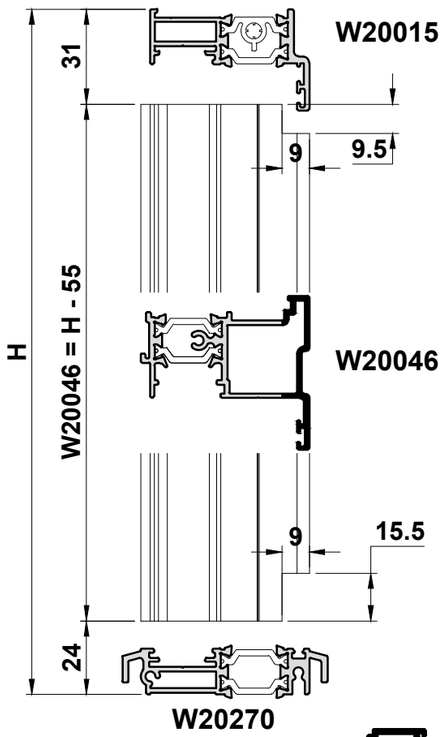


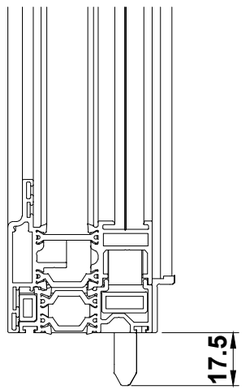


Note: Bottom of ACDV737 to align with the underside of ACW20272 for sufficient locking.

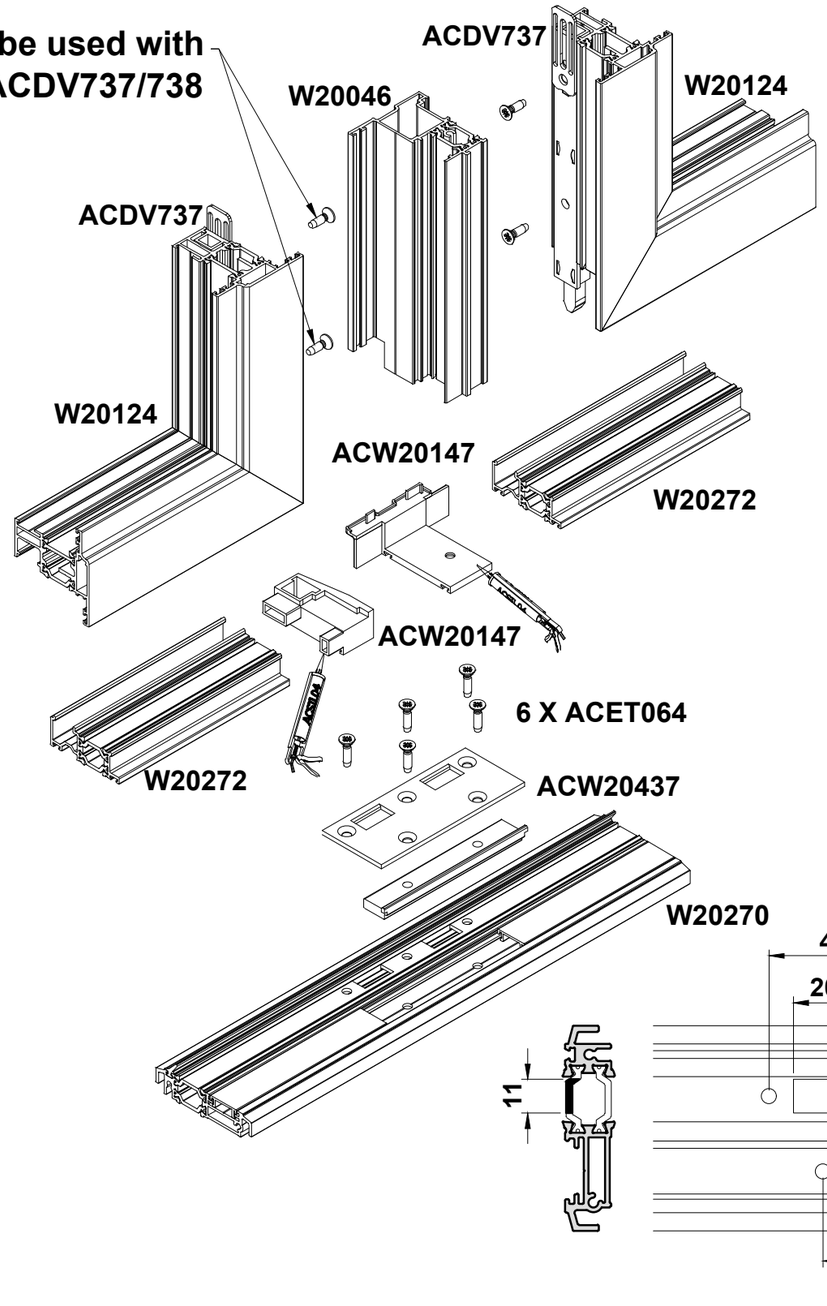


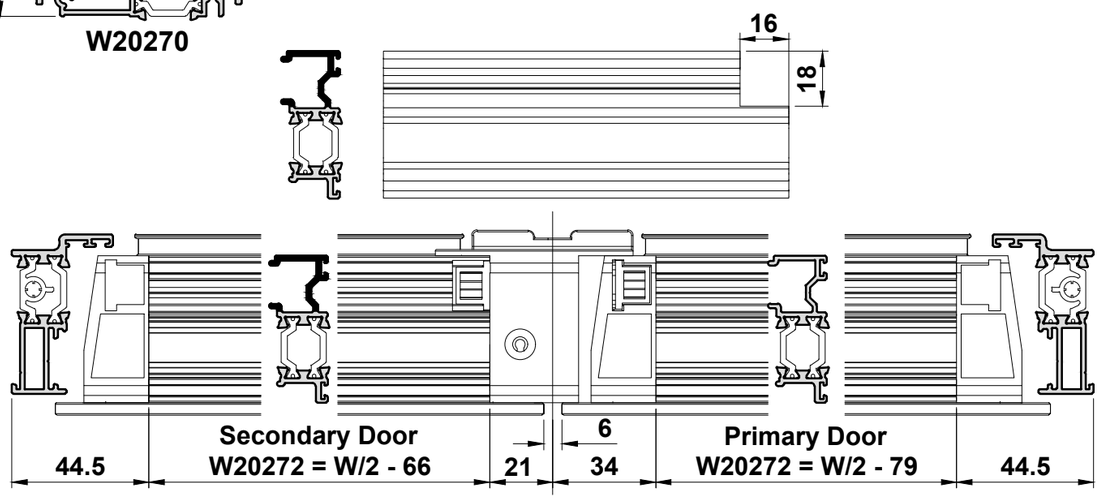





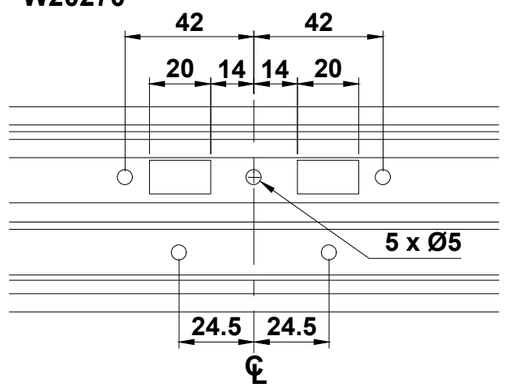


Do Not Scale From This Drawing

## Open Out Low Threshold ACW20270 Detail

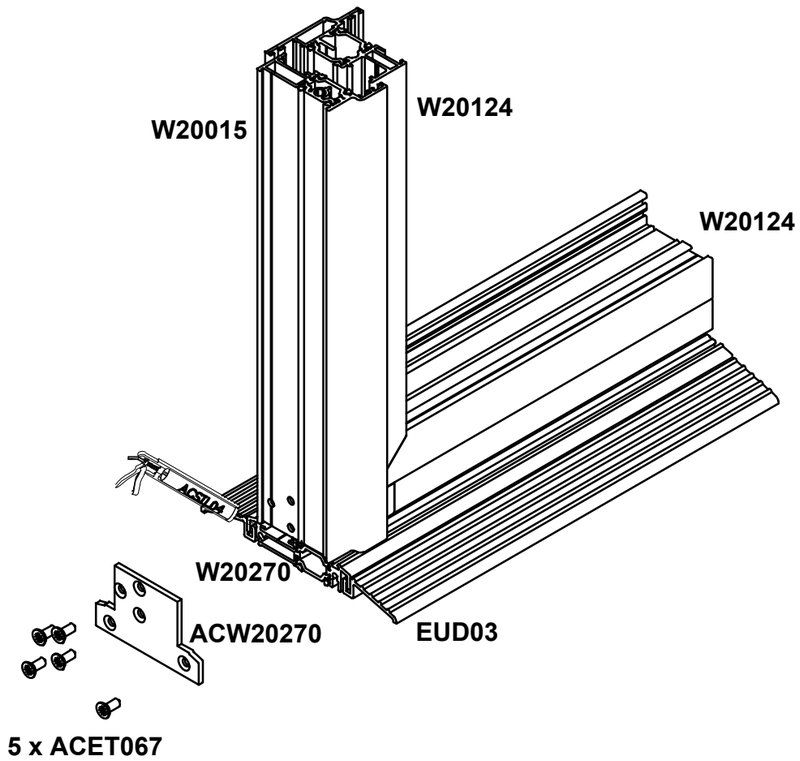


**Important Note:**
**Ensure end cap is sealed against threshold to prevent water egress.**

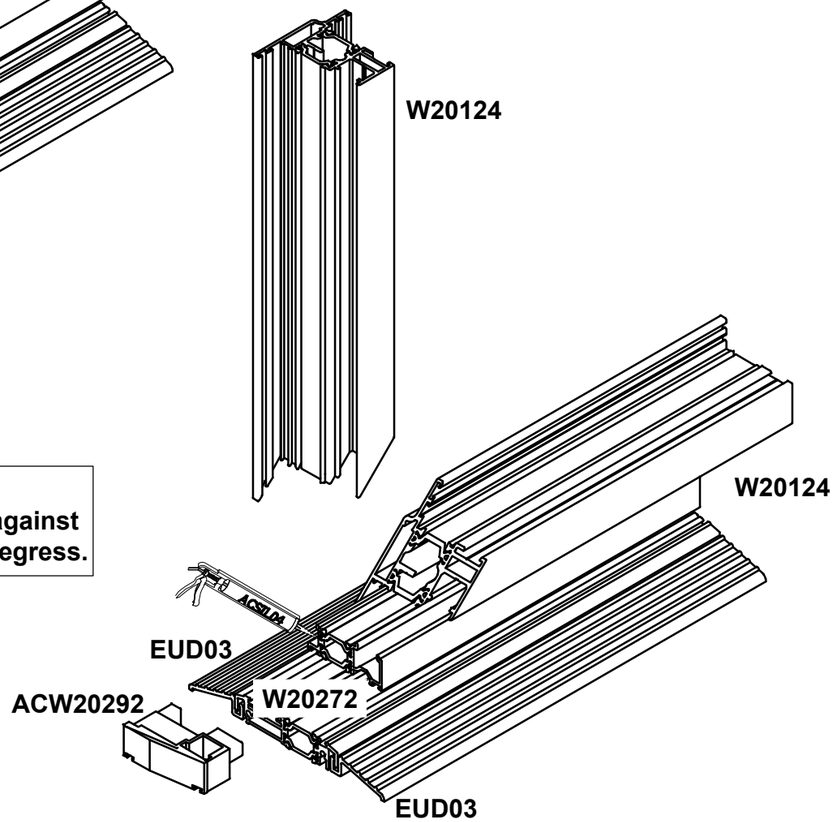


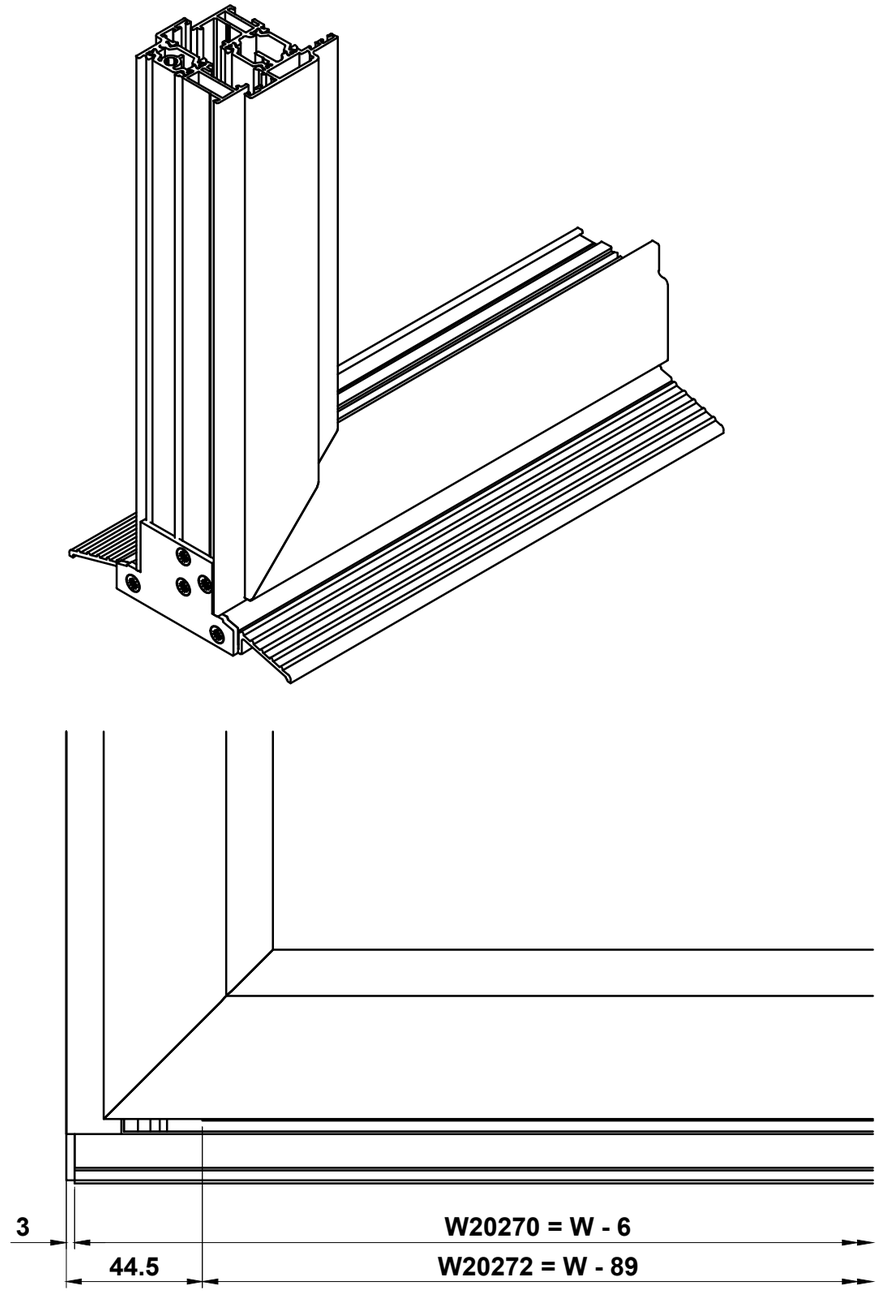


**Do Not Scale From This Drawing**

## W20027 Open Out Door Hinge Details

Recommended hinge positions

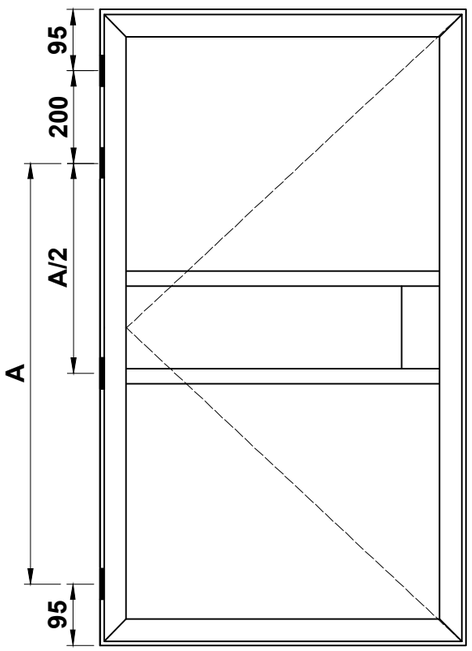


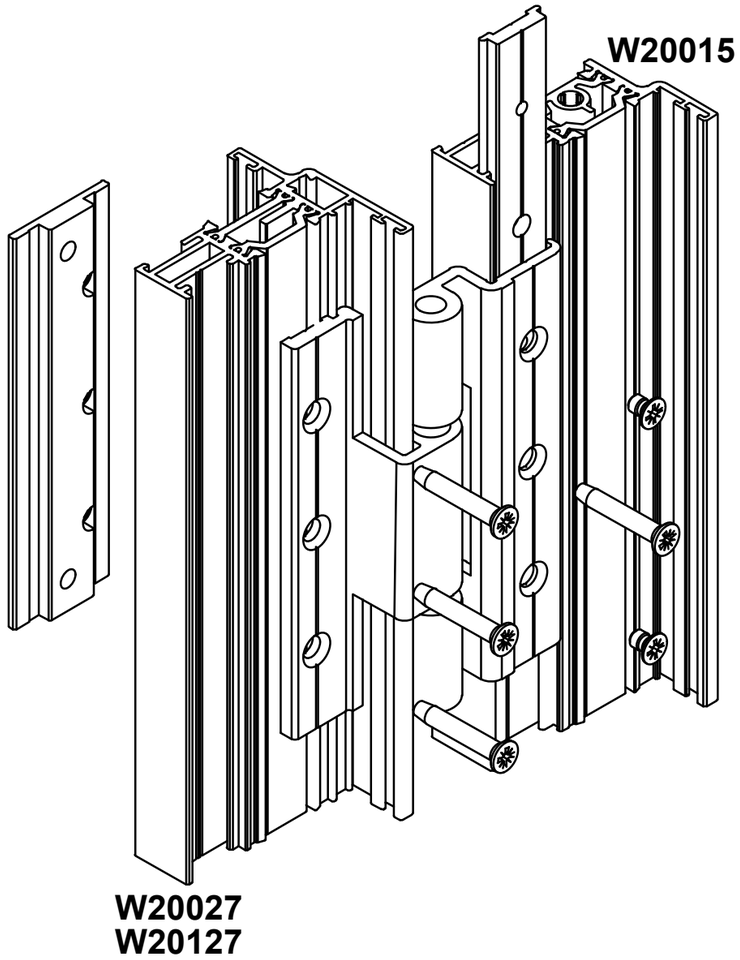


**Assembly Instructions**

1. Slide Hinge Backplates into outerframe prior to crimping.

2. Locate each hinge and clamp in position using 2No. M4 x 6mm Countersunk screws - supplied with ACW20060.

3. Use the hinge to mark the hole positions in the sash and drill Ø7mm clearance holes for the machine screws. Fasten hinge through the sash to the backplate with 3No. M4 x 20mm (W20027 & W20127) Countersunk Screws - supplied with ACW20060. The backplate may need to be tapped in position using a mallet and then secured using ACET490 screws.

4. Once the sash requires no further adjustment, fix the outerframe half of the hinge with the No.8 x 16mm Pozi Csk Self Tapping screw supplied

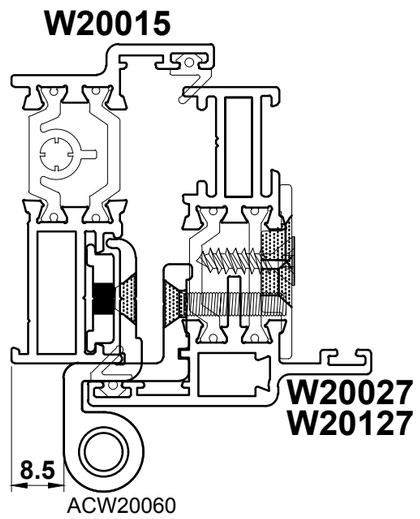


Do Not Scale From This Drawing

## W20124 Open Out Door Hinge Details (PAS24 Option)

Recommended hinge positions

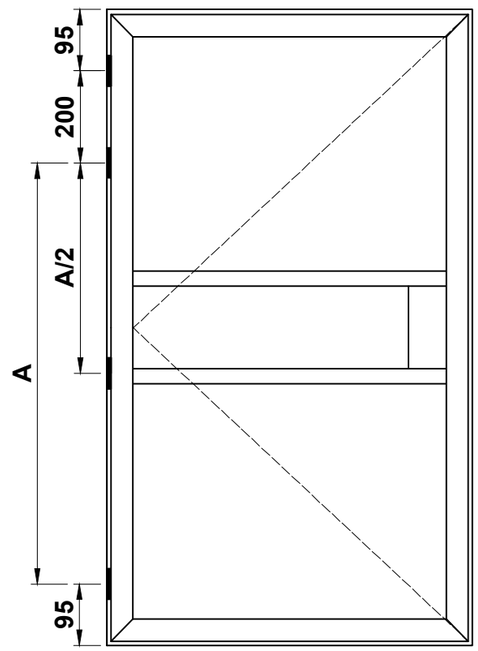


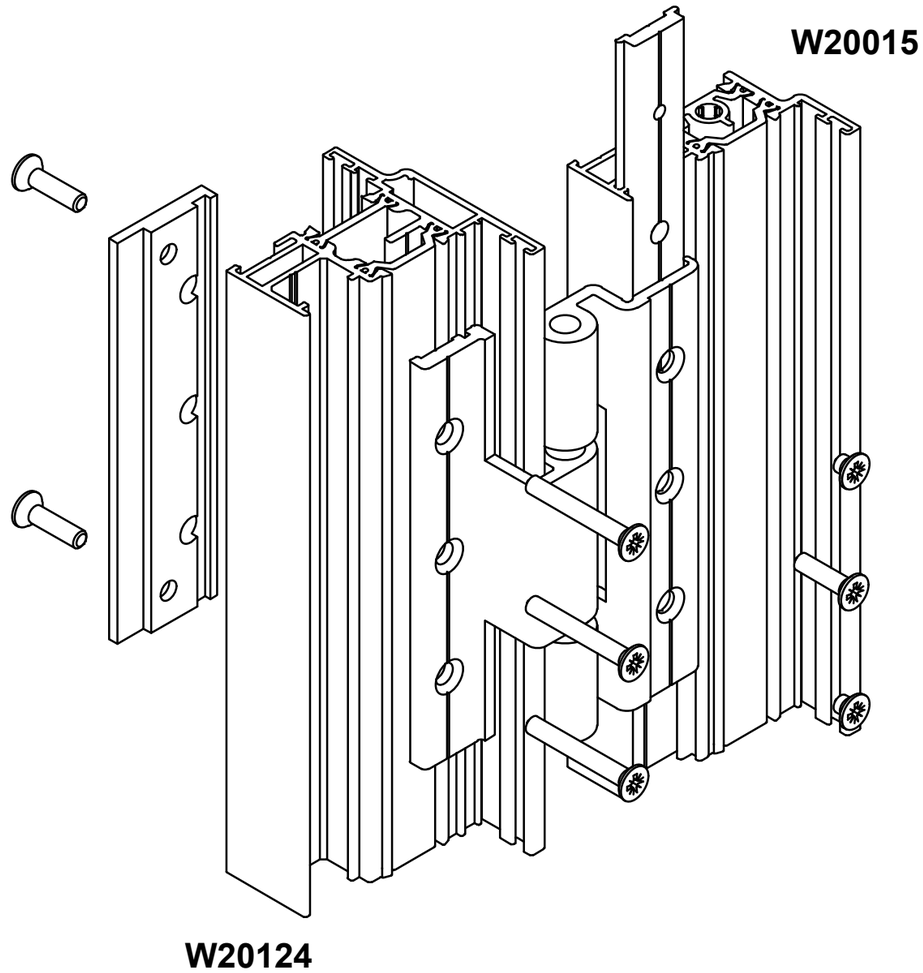


**Assembly Instructions**

1. Slide hinge back plates into W20015 and W20124 before crimping.

2. Use the hinge to park the hole positions on W20124. Drill a 4.5mm clearance holes for M4 CSK machine screws. Fasten hinges to W20124with M4 machine screws into back plate.

3. Fit W20124 into W20015 then fasten hinge to outer frame fixing hinges to W20015 frame back plates.

4. Once W20124 requires no further adjustment fix through center hinge hole to dead fix.

**Note: Coupler will clash with ACW20382 fixing plate**

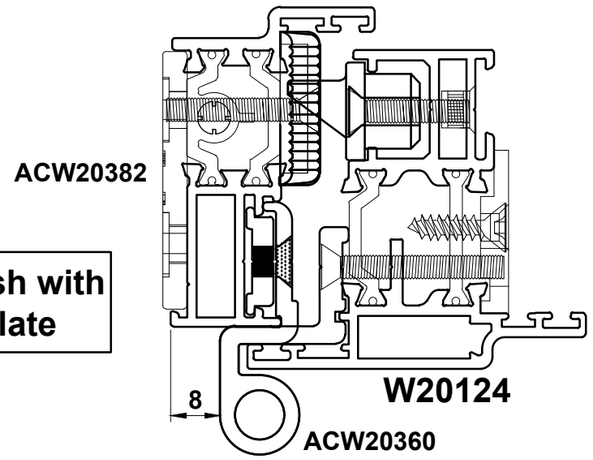


Do Not Scale From This Drawing

# Open Out 90° Restrictor Installation

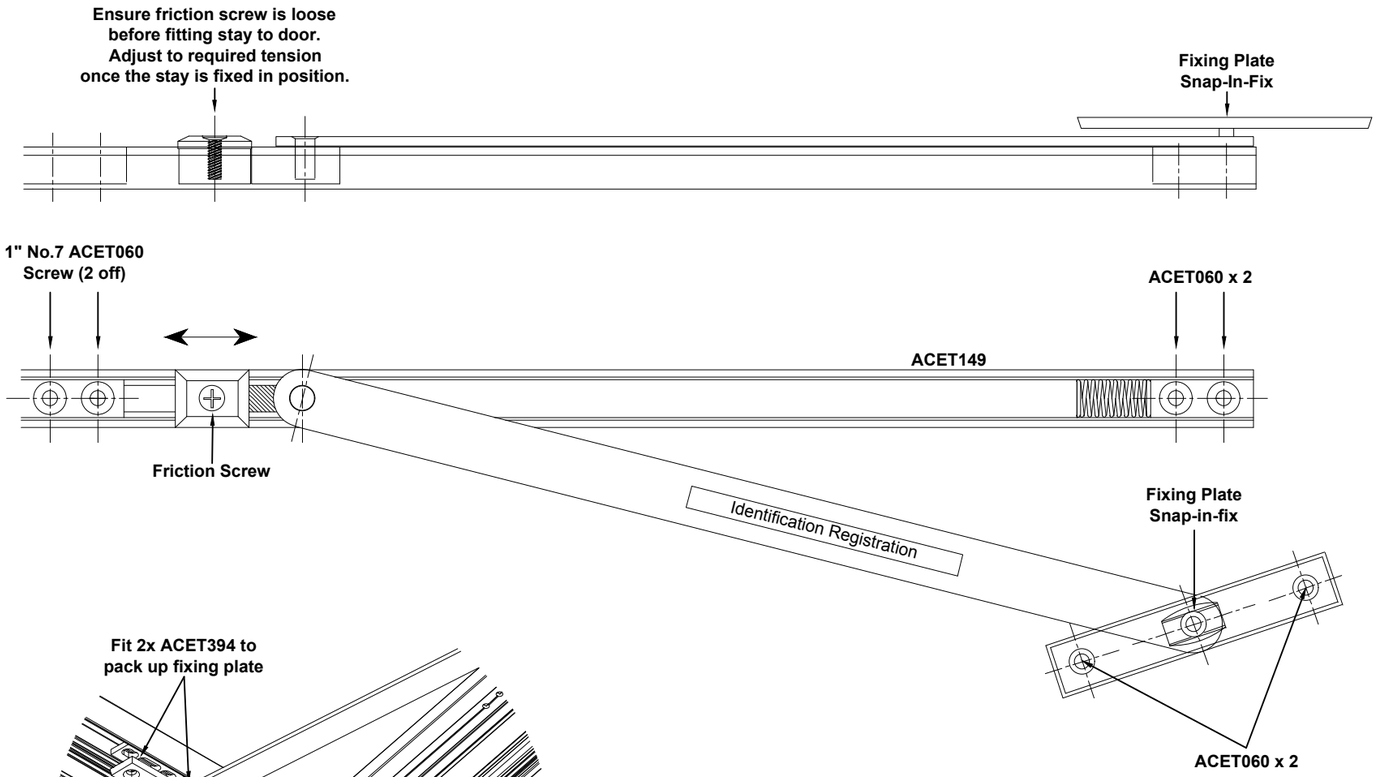


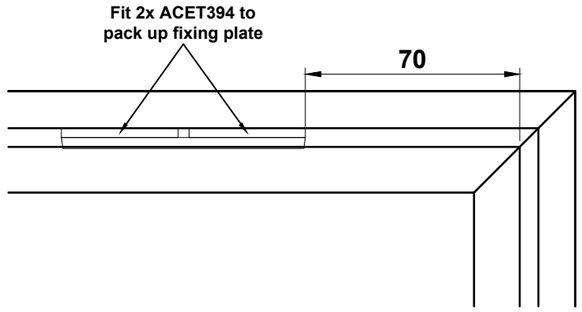


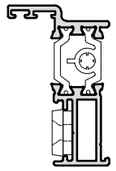

W20015
W20016
W20017
W20111
W20112

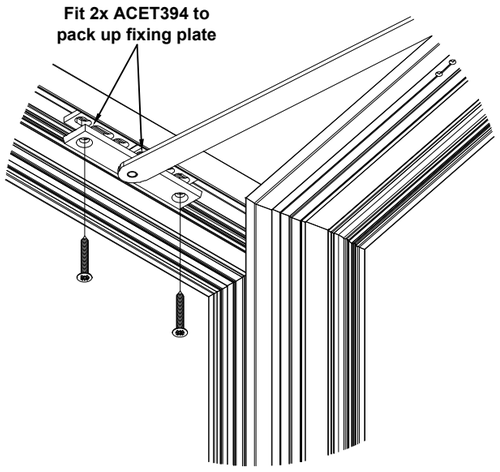


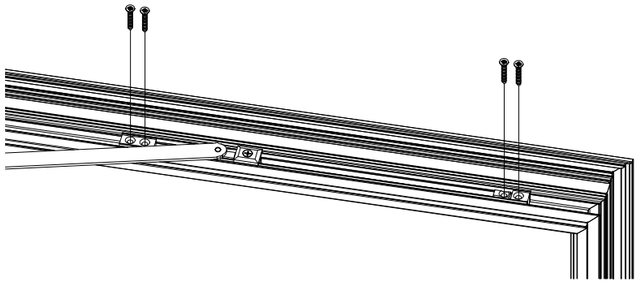

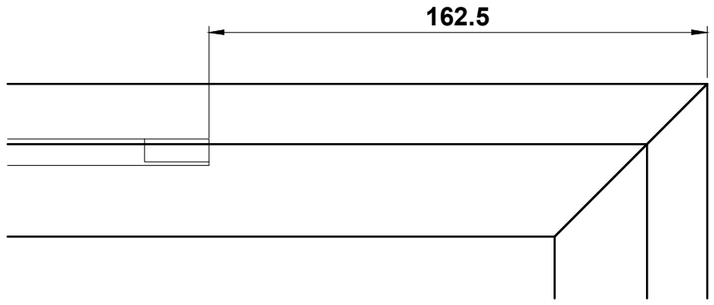


Bead to be notched
around fixing

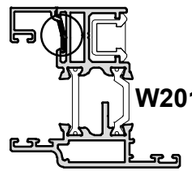

W20124

**NOTE: ACET149 IS NOT COMPAITBLE WITH W20027 AND W20127**

Do Not Scale From This Drawing

# PAS24 Open Out Single Door Full Requirements

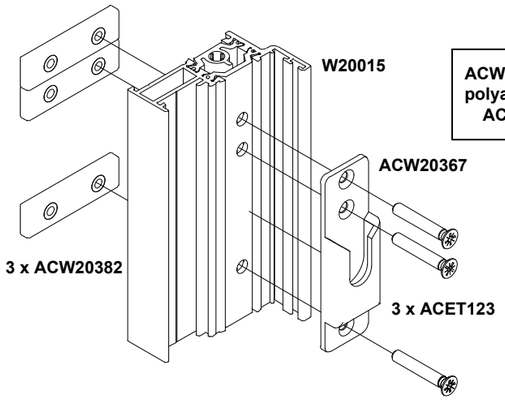


ACW20367 Roller Keep to be fixed through polyamide using ACET123 fixings and into ACW20382 reinforced M4 Fixing Plate.

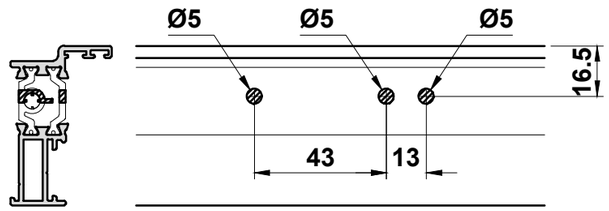


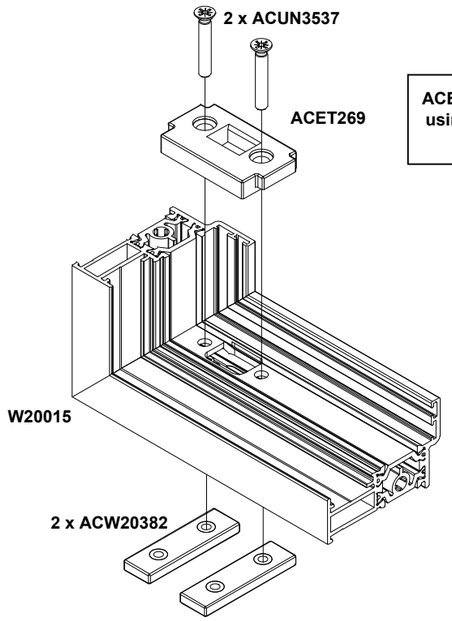


ACET269 Keep to be fixed through polyamide using ACUN3537 fixings and into ACW20382 reinforced M4 Fixing Plate.

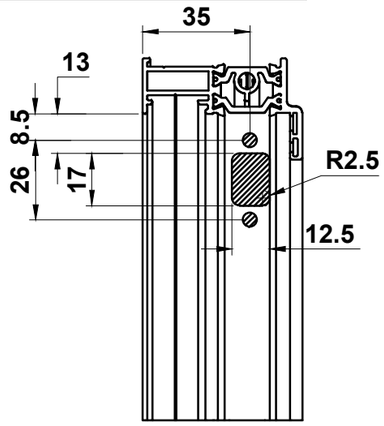


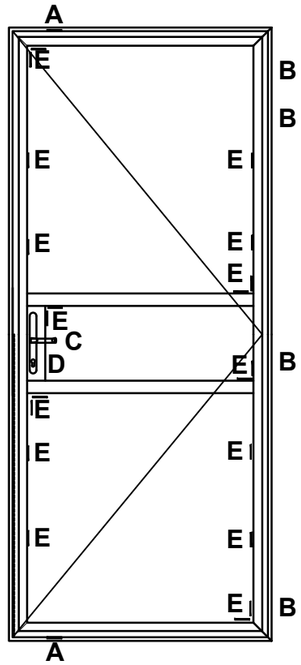


## Single Door

### Accessories Required to Achieve PAS24:2016

| | | |
|---|---|---|
| A | Guide Blocks | ACET380 |
| B | Hinges/Hinge Protectors | ACW20360/ACW20375 |
| C | Lever/Lever Handle | ACSM001N |
| D | Cylinder | ACCY4525NKTTS3 |
| E | Glass Packer Positions | |
| | Centre Keep | ACW20066 |
| | Roller Keep | ACW20367 |
| | Lock | ACW20465 |

Note: Polyamide must be routed out prior to installing ACW20375 hinge protectors

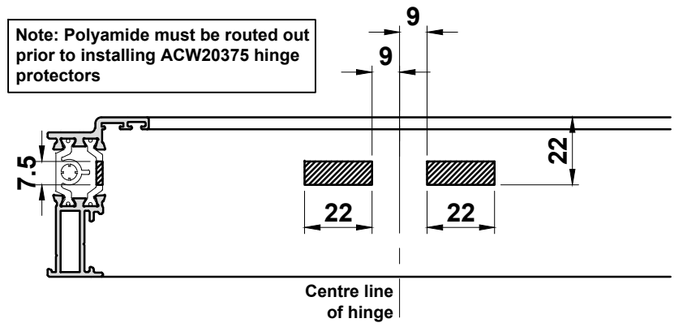


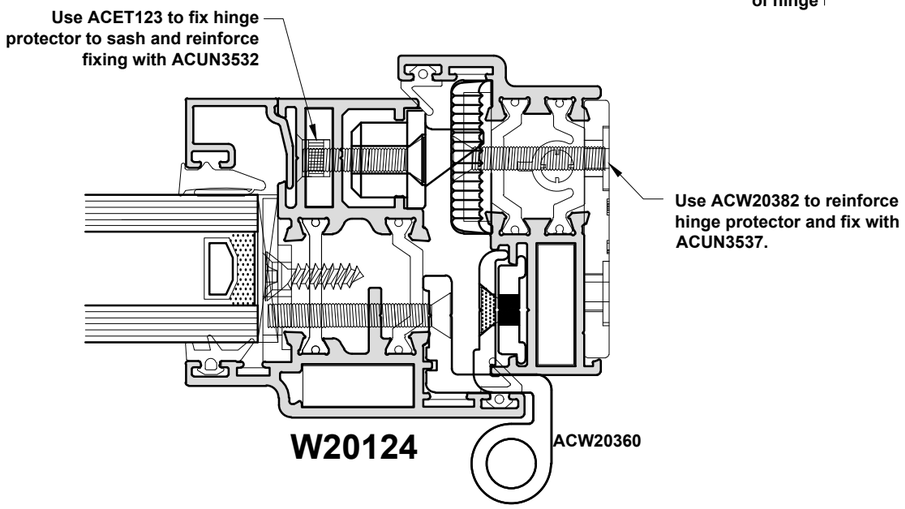

# PAS24 Open Out Double Door Full Requirements

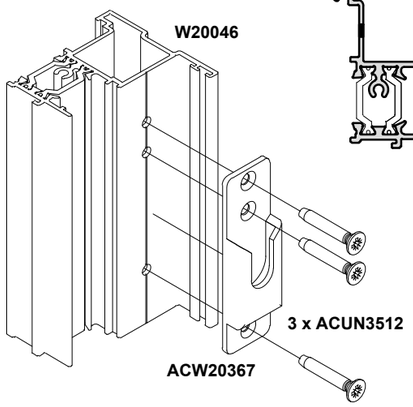


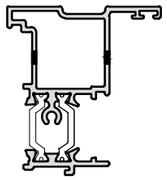

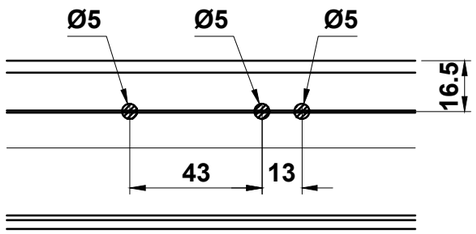


ACW20367 Roller Keep to be fixed into first and second skin of W20046 using ACUN3512 fixings.

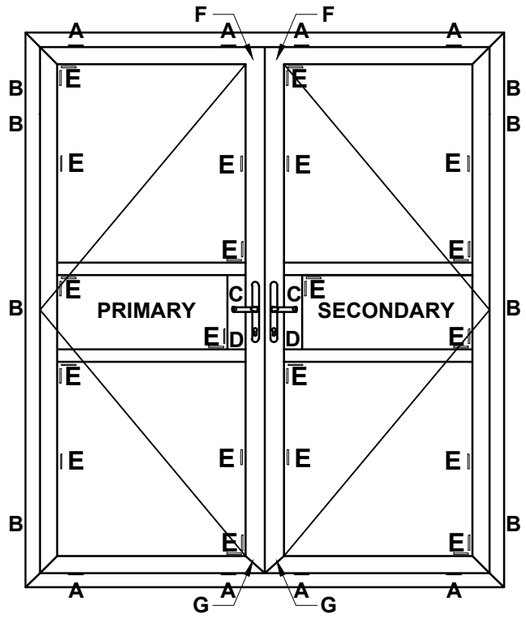


## Double Door

### Accessories Required to Achieve PAS24:2016

| | | |
|---|---|---|
| A | Guide Blocks | ACET380 |
| B | Hinges/Hinge Protector | ACW20360/ACW20375 |
| C | Lever/Lever Handle | ACSM001N |
| D | Cylinder | ACCY4525NKTTS3 |
| E | Glass Packer Positions | |
| F | Top Shootbolt/Keep | ACDV738/ACW20437 |
| G | Bottom Shootbolt/Keep | ACDV737/ACW20437 |
| | Centre Keep | ACW20066 |
| | Roller Keep | ACW20367 |
| | Primary Lock | ACW20465 |
| | Secondary Lock | ACW20466 |

**Note: Please see single door PAS24 page to see preparation for the hinge side of the double door.**

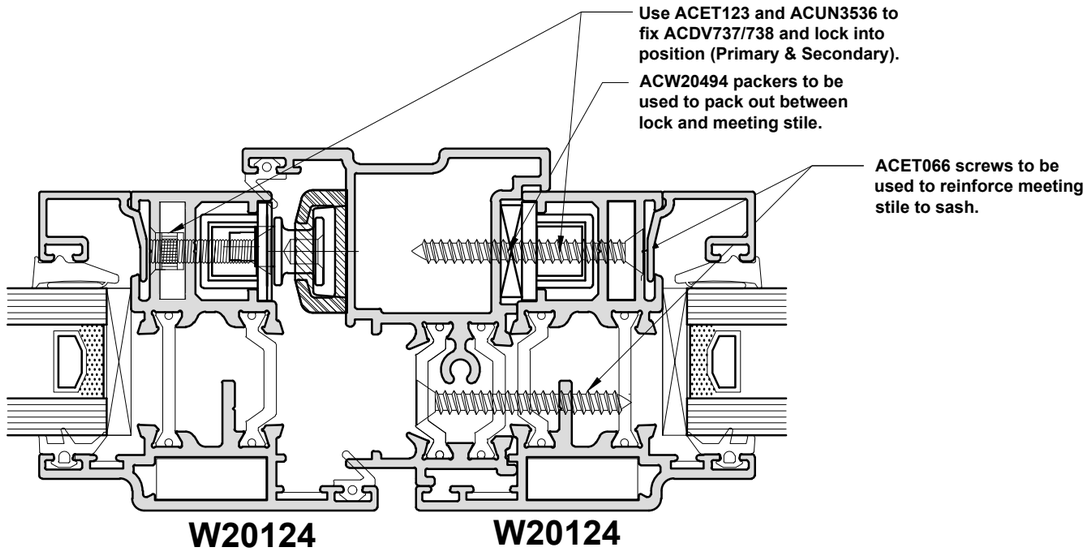


Do Not Scale From This Drawing

E W

Construction Drawings

Open In

Drainage Details..... E26 - E27
Single Lock Overview..... E28
Lock Details..... E29 - E32
Double Door Lock Overview..... E33
Double Door using W20048..... E34
W0129 Open In Lock Selection..... E35
Double Door Thresholds Using W21048..... E36 - E37
Low Threshold ACW20270 Detail..... E38
Hinge Details..... E39 - E40
90° Restrictor Installation..... E41
PAS24 Full Requirements..... E42- E43

## W20125N Open In Door Drainage Detail

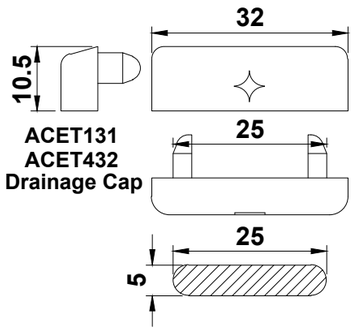


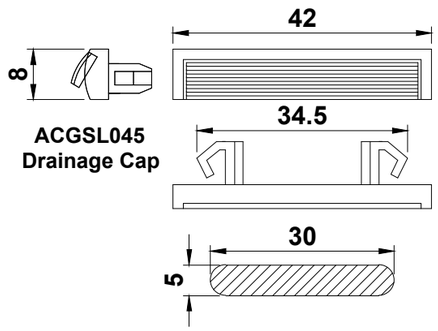


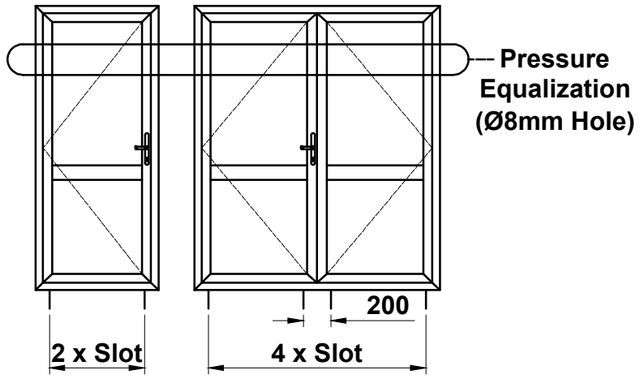


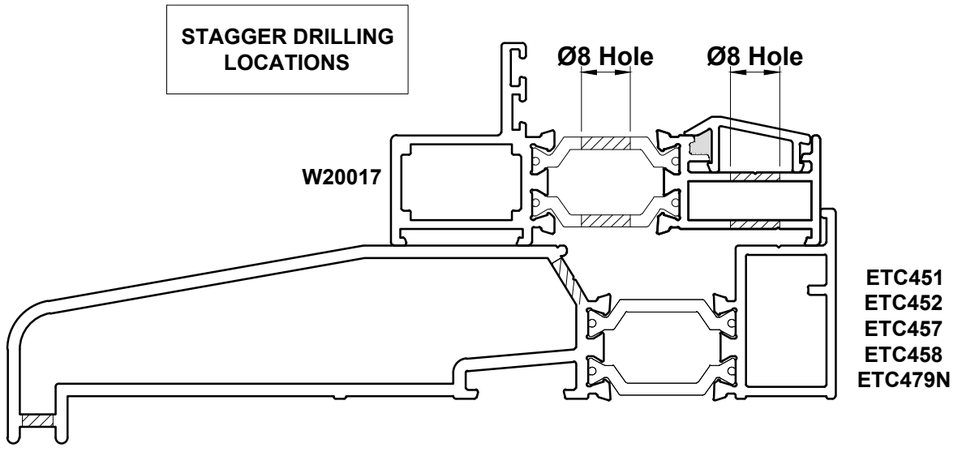


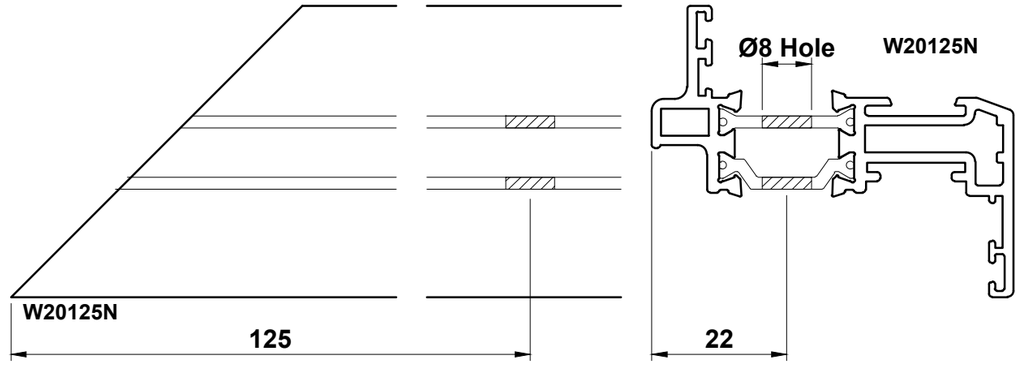


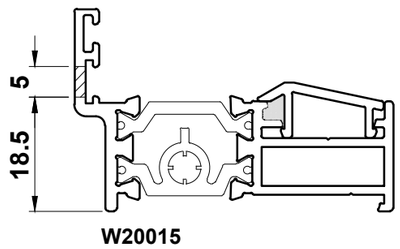


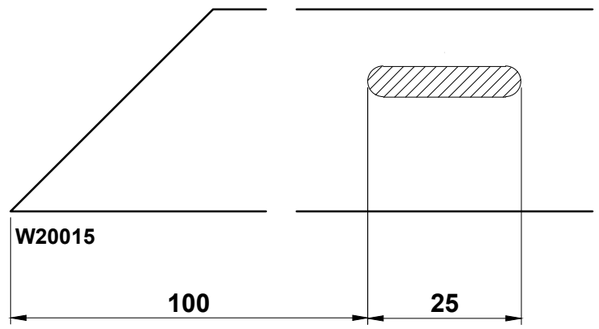

## W20129 Open In Door Drainage Detail

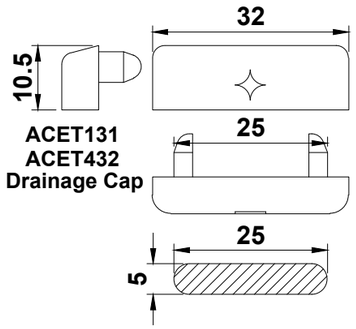


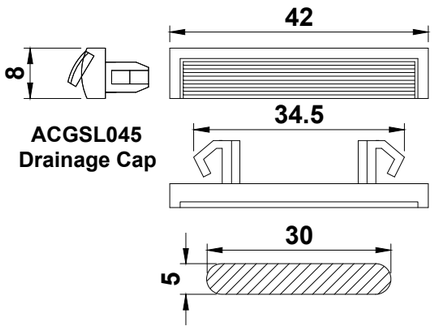


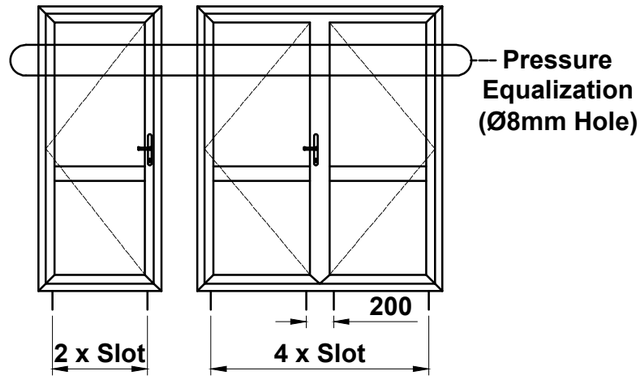


**Note: Use ACW928 jig to drill 45° angled Ø5 hole and opened up to a Ø7 drainage hole.**

**Low Threshold Drainage Path**

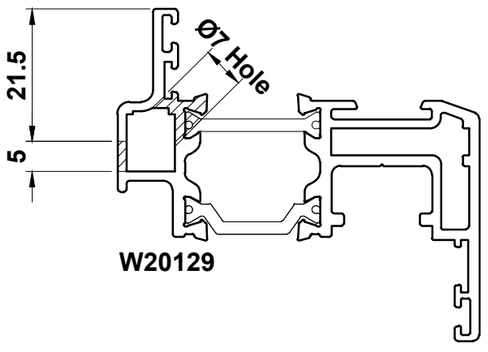


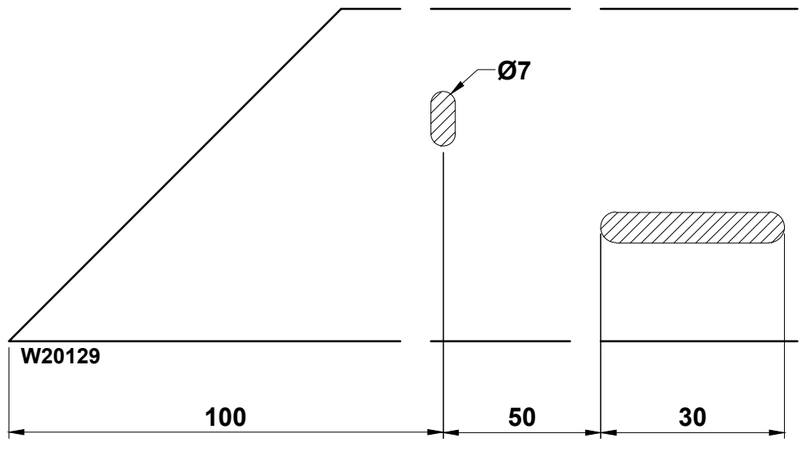


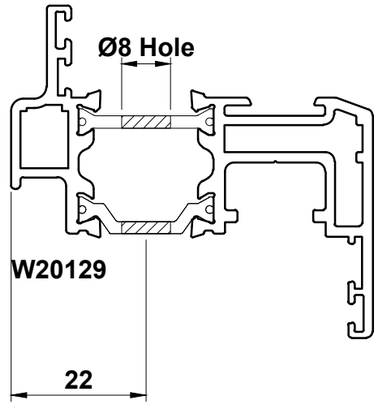


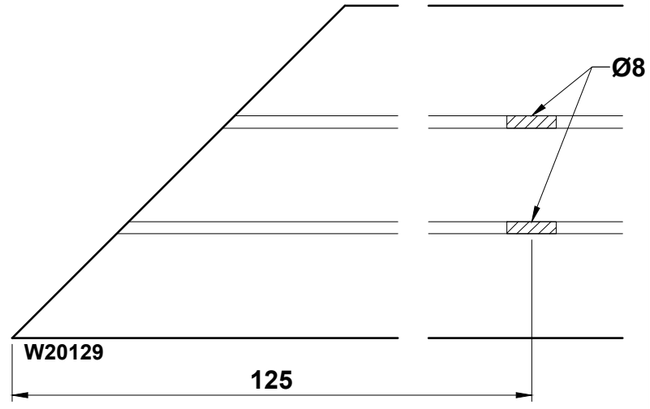


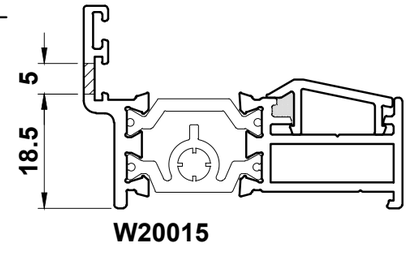


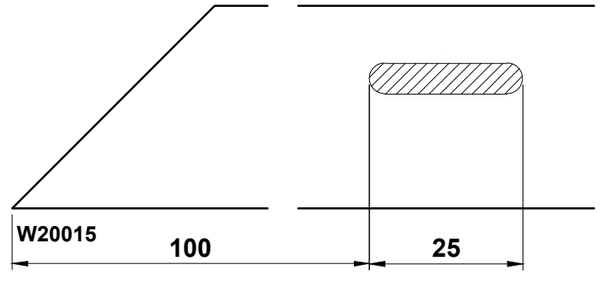


**Do Not Scale From This Drawing**

## Single Door Lock Overview

### W20125N Sash

| Lock | Accessories | Quantity |
|---|---|---|
| ACW20065 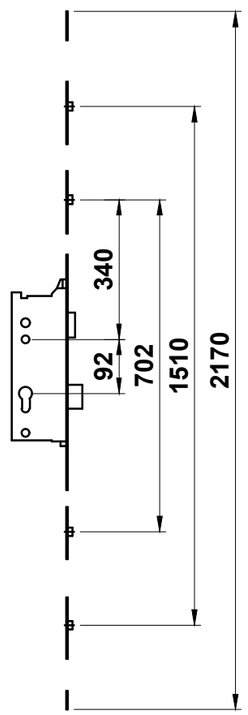  | ACCY4525NKTTS3 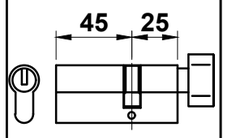  | 1 |
| | ACW20166 L/R 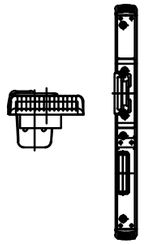 | 1 |
| | ACW20067 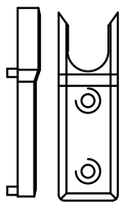 | 4 |

### W20129 Sash (PAS24 Option)

| Lock | Accessories | Quantity |
|---|---|---|
| ACW20465 (W20124) 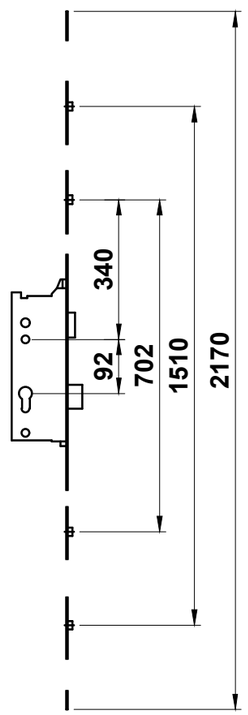  | ACCY4525NKTTS3 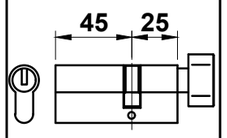  | 1 |
| | ACW20166 L/R 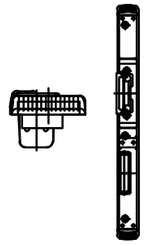 | 1 |
| | ACW20367 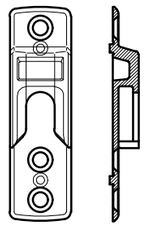 | 4 |

Do Not Scale From This Drawing

## W20125N Open In Door Lock Preparation

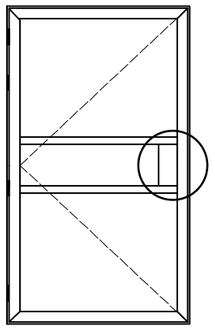

Drill Jig = ACW925/ACW927
Jig MUST be clamped in position before drilling

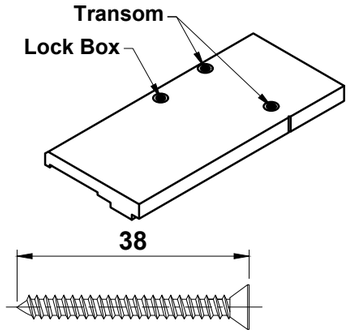


Use ACET066 screw to secure transoms/mullions

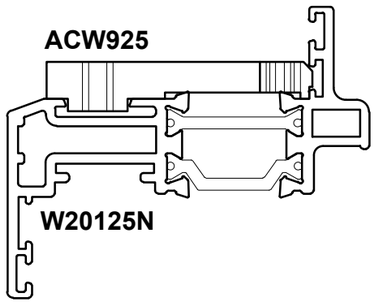


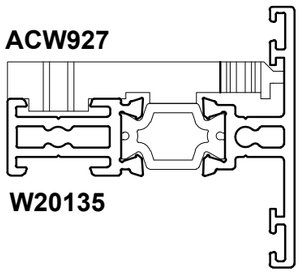


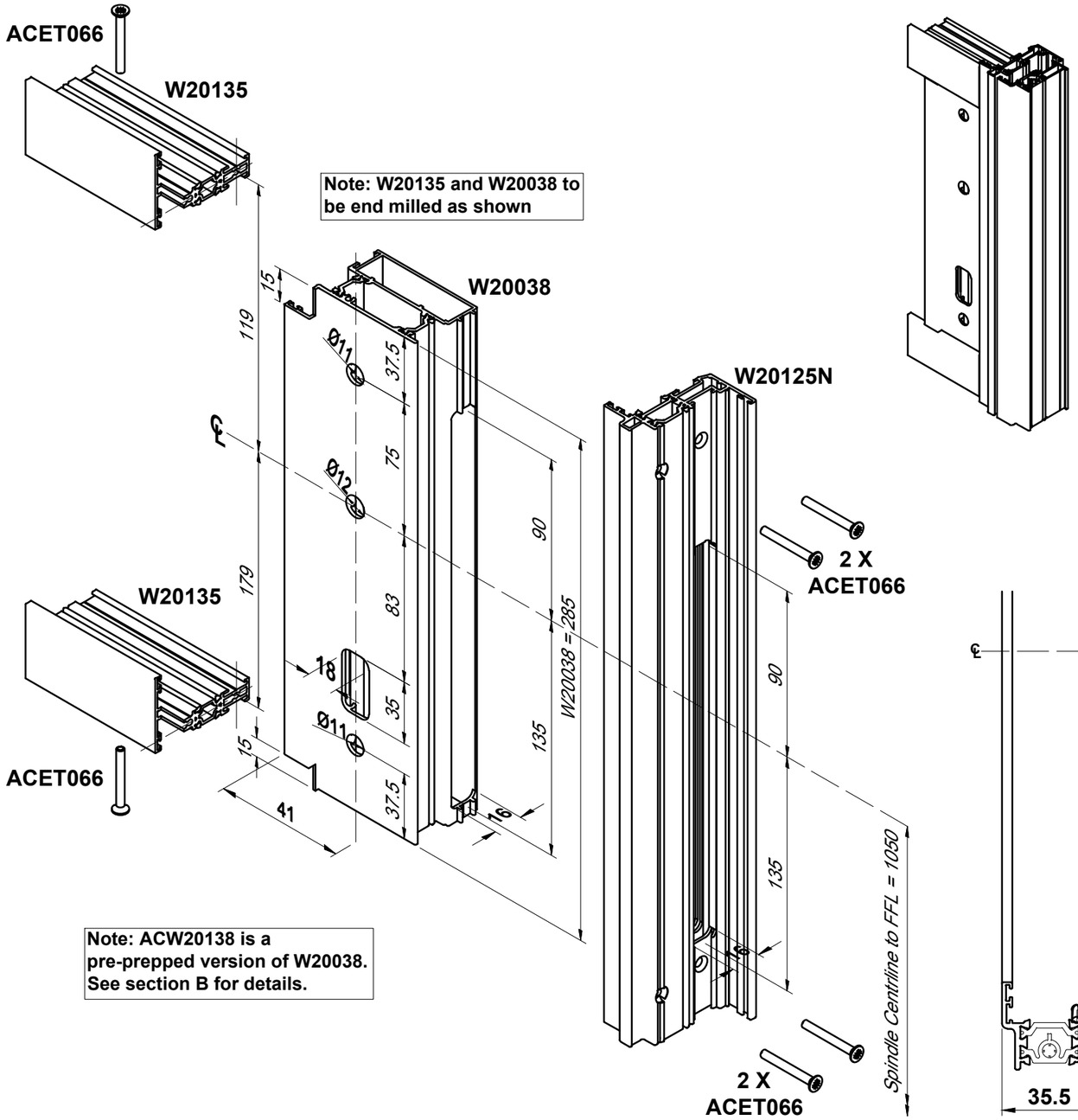


Do Not Scale From This Drawing

## W20125N Open In Door Lock Preparation Continued

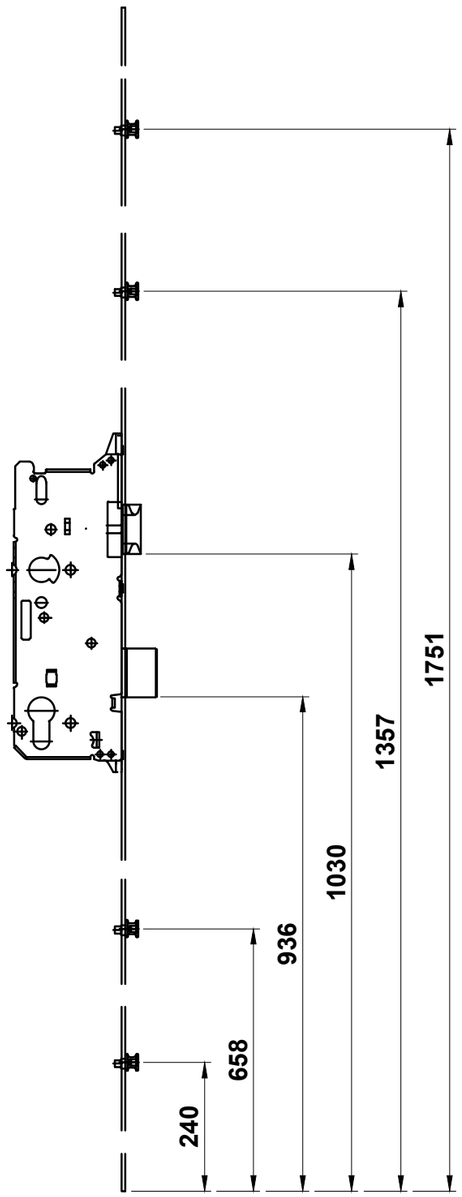


Locking Positions (in unlocked position)

Lock Fixing to Sash

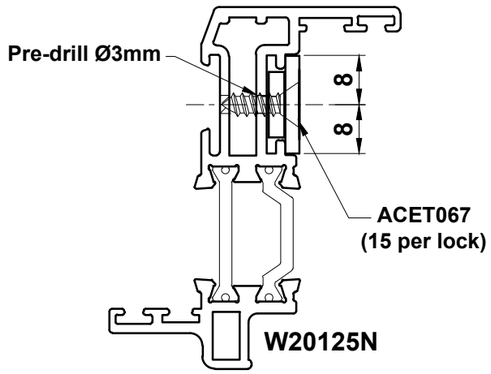


Lock Detail on Sash

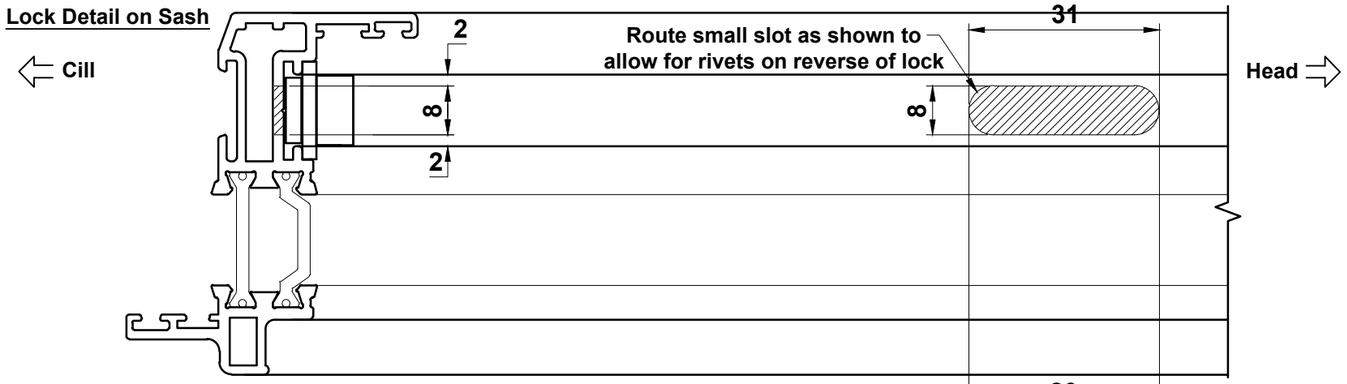


Lock Detail

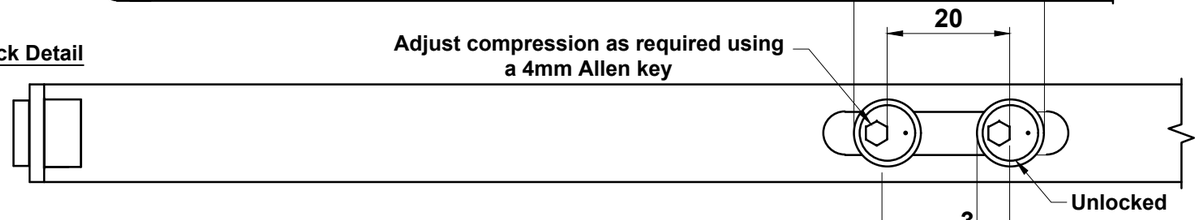


Keep Position

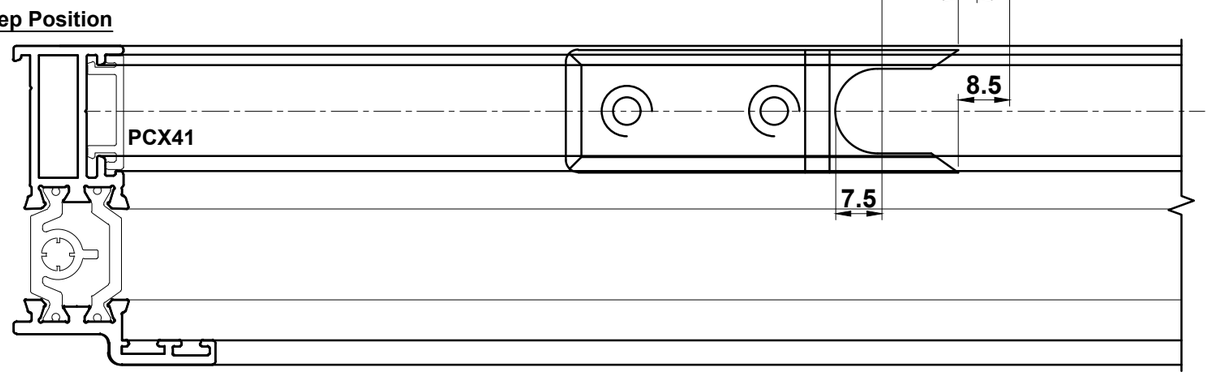


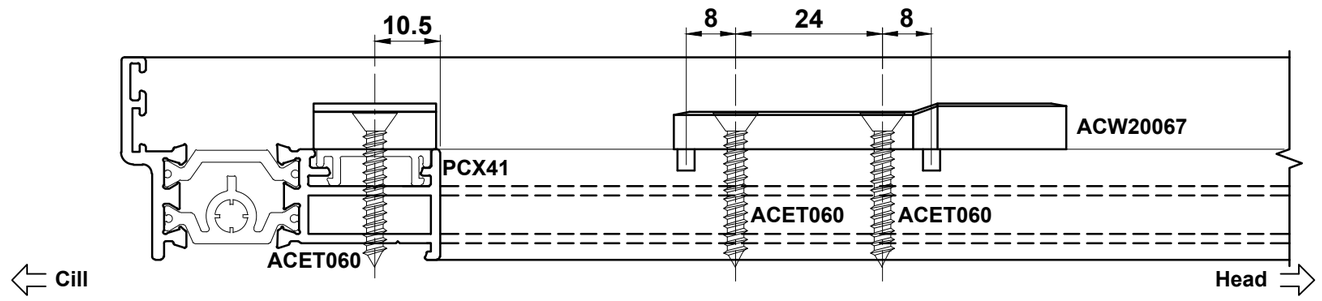


Do Not Scale From This Drawing

## W20129 Open In Door Lock Preparation (PAS24 Option)

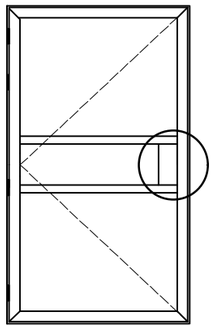

Drill Jig = ACW925/ACW927

Jig MUST be clamped in position before drilling

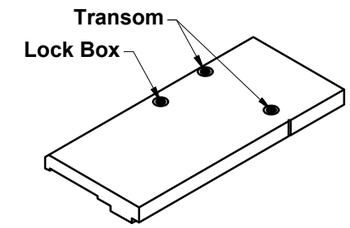


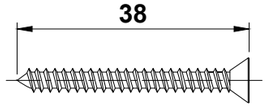


Use ACET066 screw to secure transoms/mullions

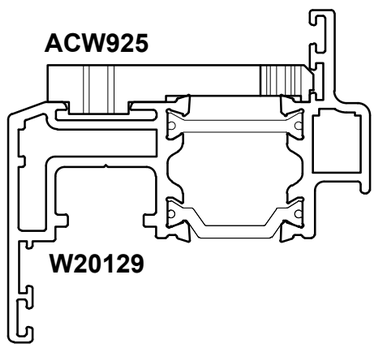


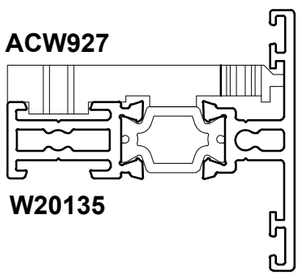


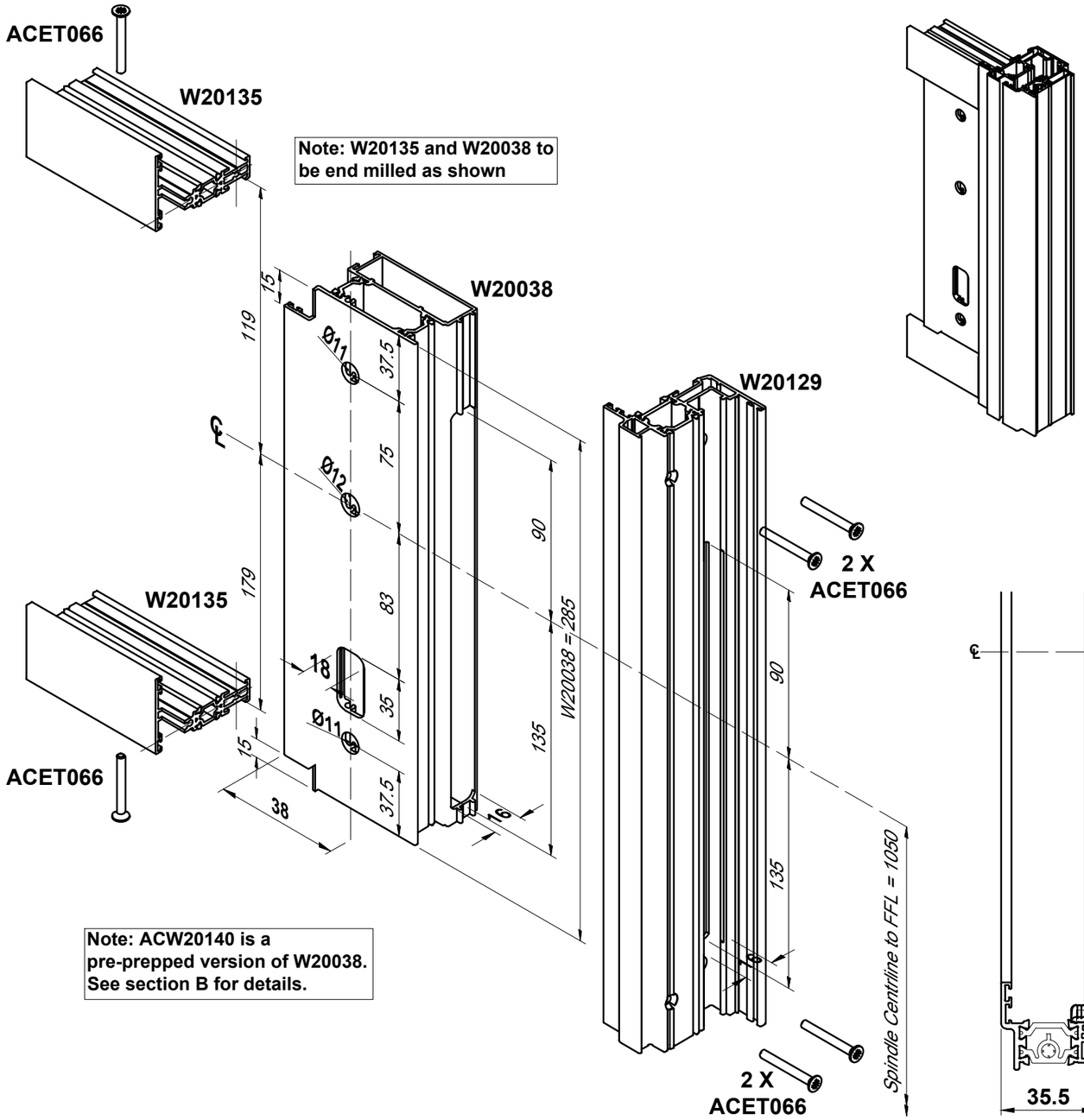


Do Not Scale From This Drawing

## W20129 Open In Door Lock Preparation (PAS24 Option) Continued

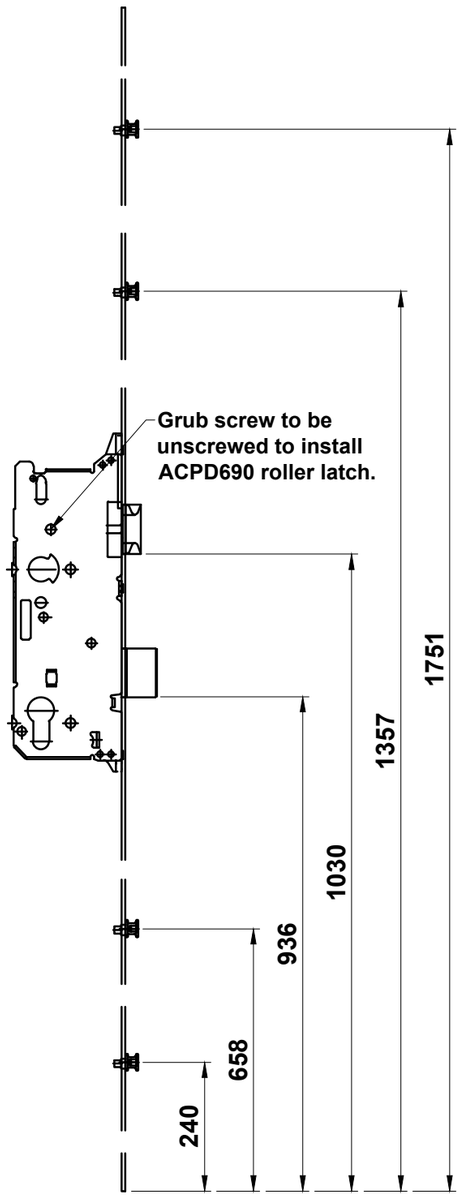


Locking Positions (in unlocked position)

Lock Fixing to Sash

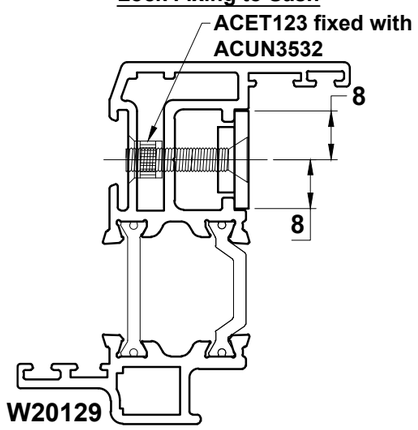


Lock Detail on Sash

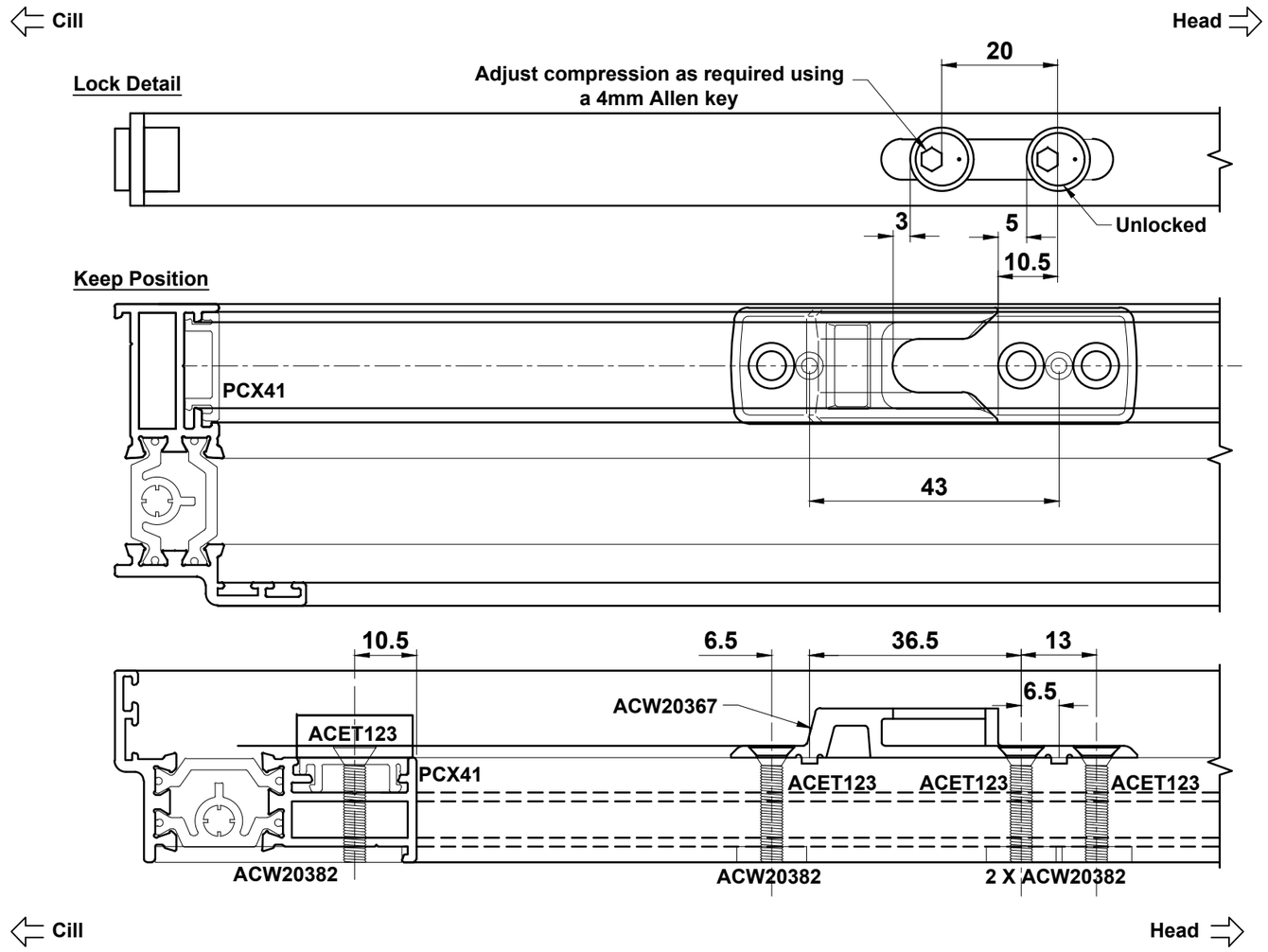


Do Not Scale From This Drawing

## Double Door Lock Overview

### W20027 Sash

| Lock | Accessories | Quantity |
|---|---|---|
| ACW20065 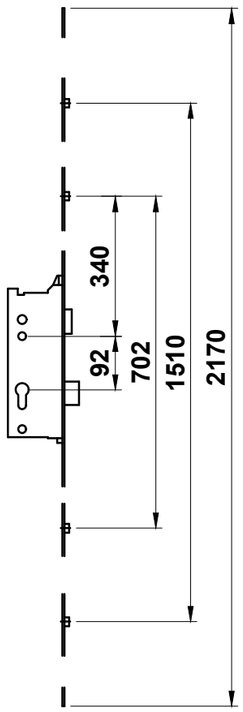  | ACCY4525NKTTS3 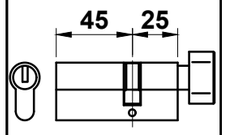  | 1 |
| | ACVL432 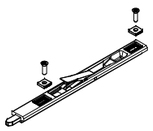 | 2 |
| | ACW20166 L/R 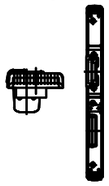 | 1 |
| | ACW20067 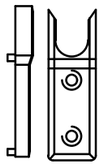 | 4 |
| | ACW20432 | 2 |

### W20129 Sash (PAS24 Option)

| Lock | | Accessories | Quantity |
|---|---|---|---|
| ACW20465 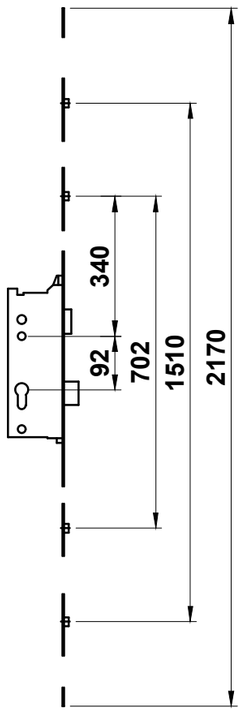  | ACW20466 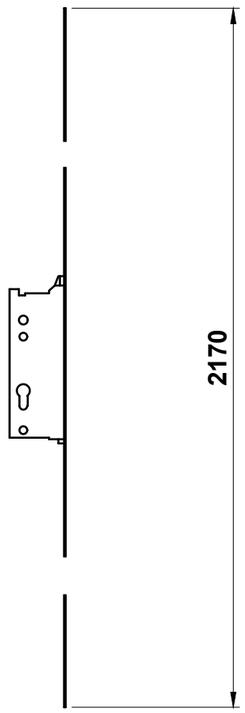  | ACCY4525NKTTS3 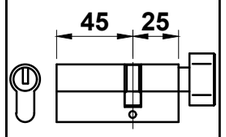  | 1 |
| | | ACDV737/ACDV738 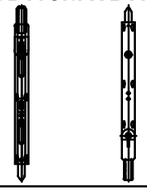 | 2 / 2 |
| | | ACW20166 L/R 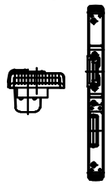 | 1 |
| | | ACW20367 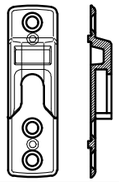 | 4 |
| | | ACW20385 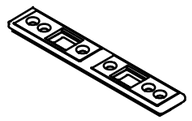 | 2 |

**Do Not Scale From This Drawing**

## Open In Double Door Using W20148

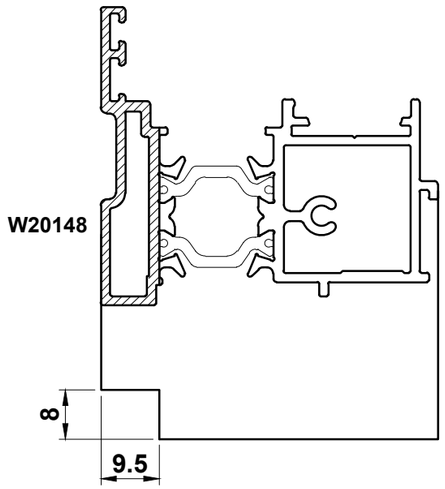


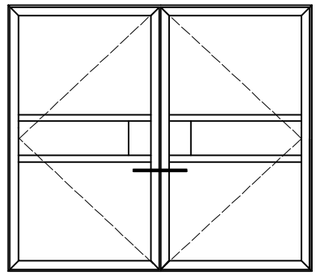

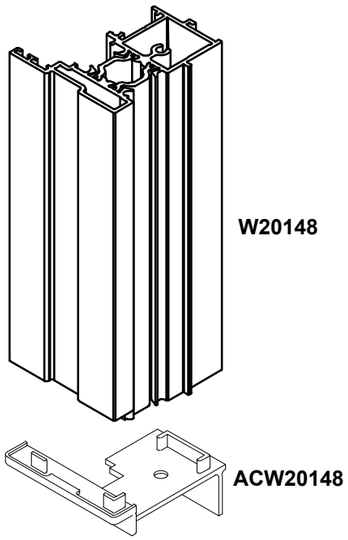


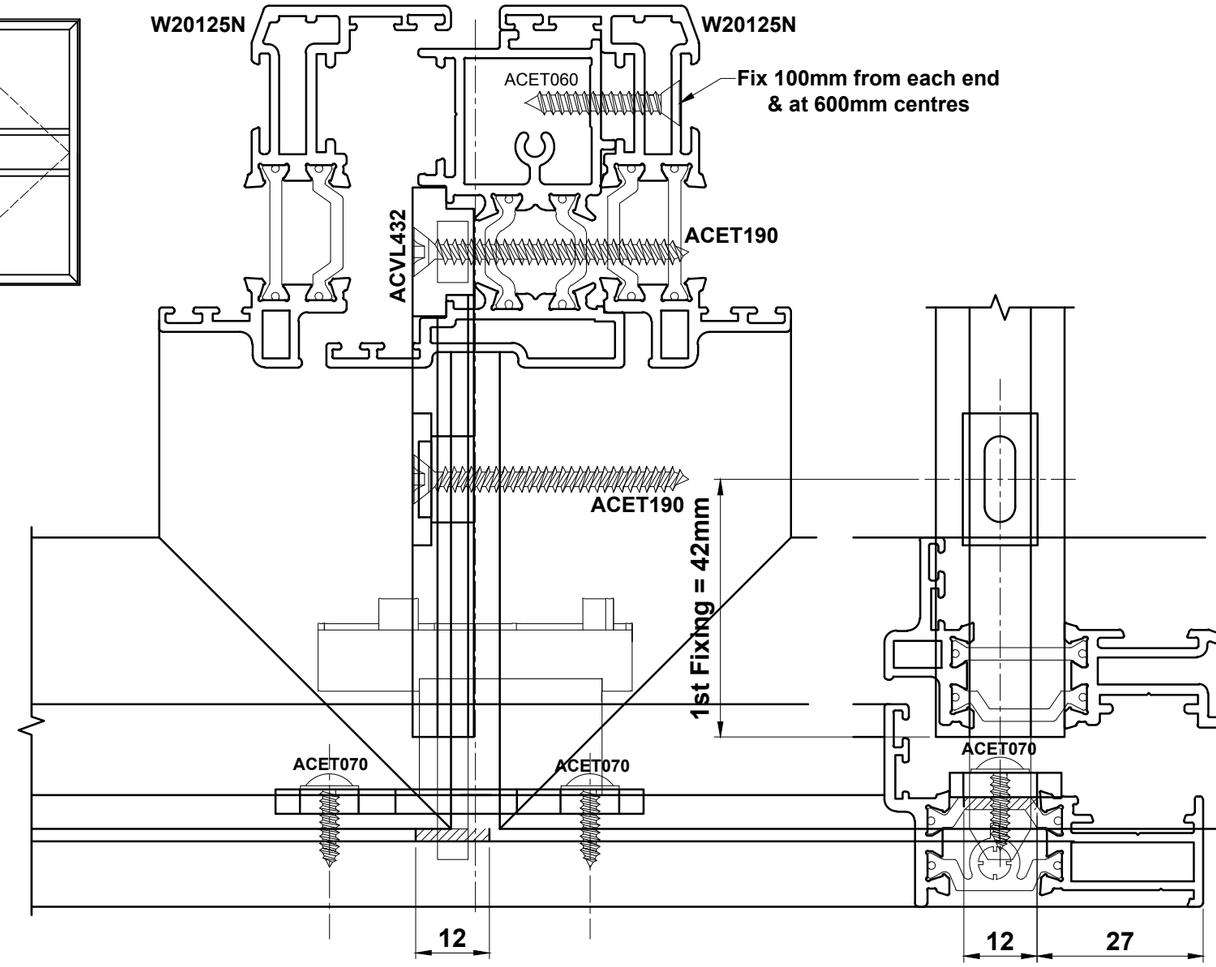


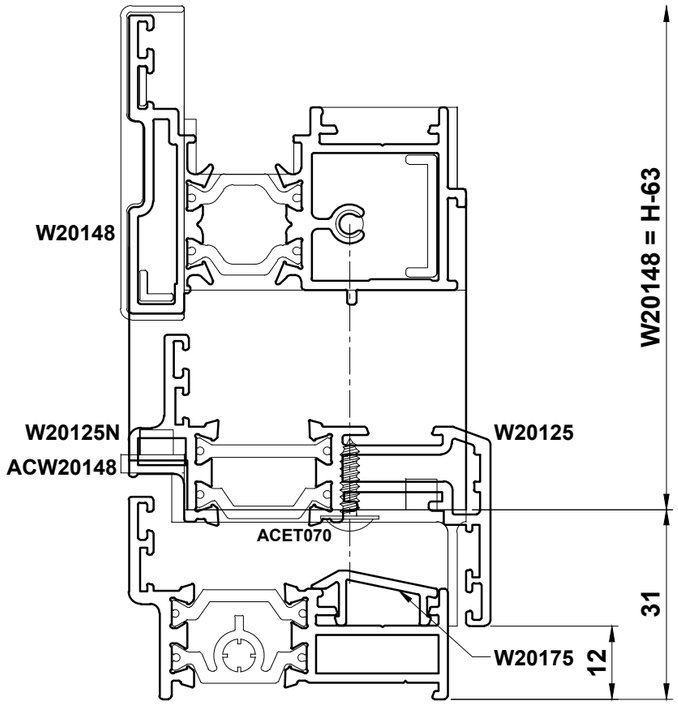


**Important Note - ACUL432 is not covered by PAS24. Please see page E48 for PAS24 page.**

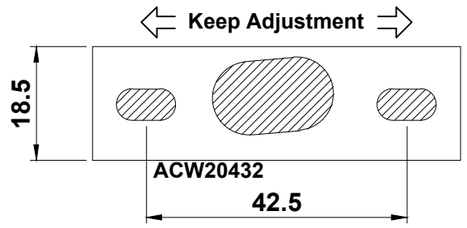


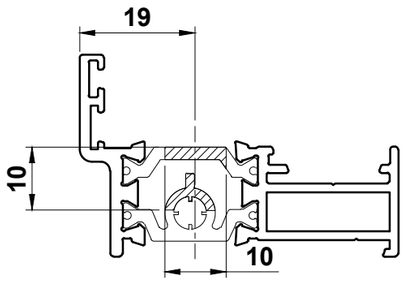


**Do Not Scale From This Drawing**

## W20129 Open In Lock Selection with Shootbolts (PAS24 Option)

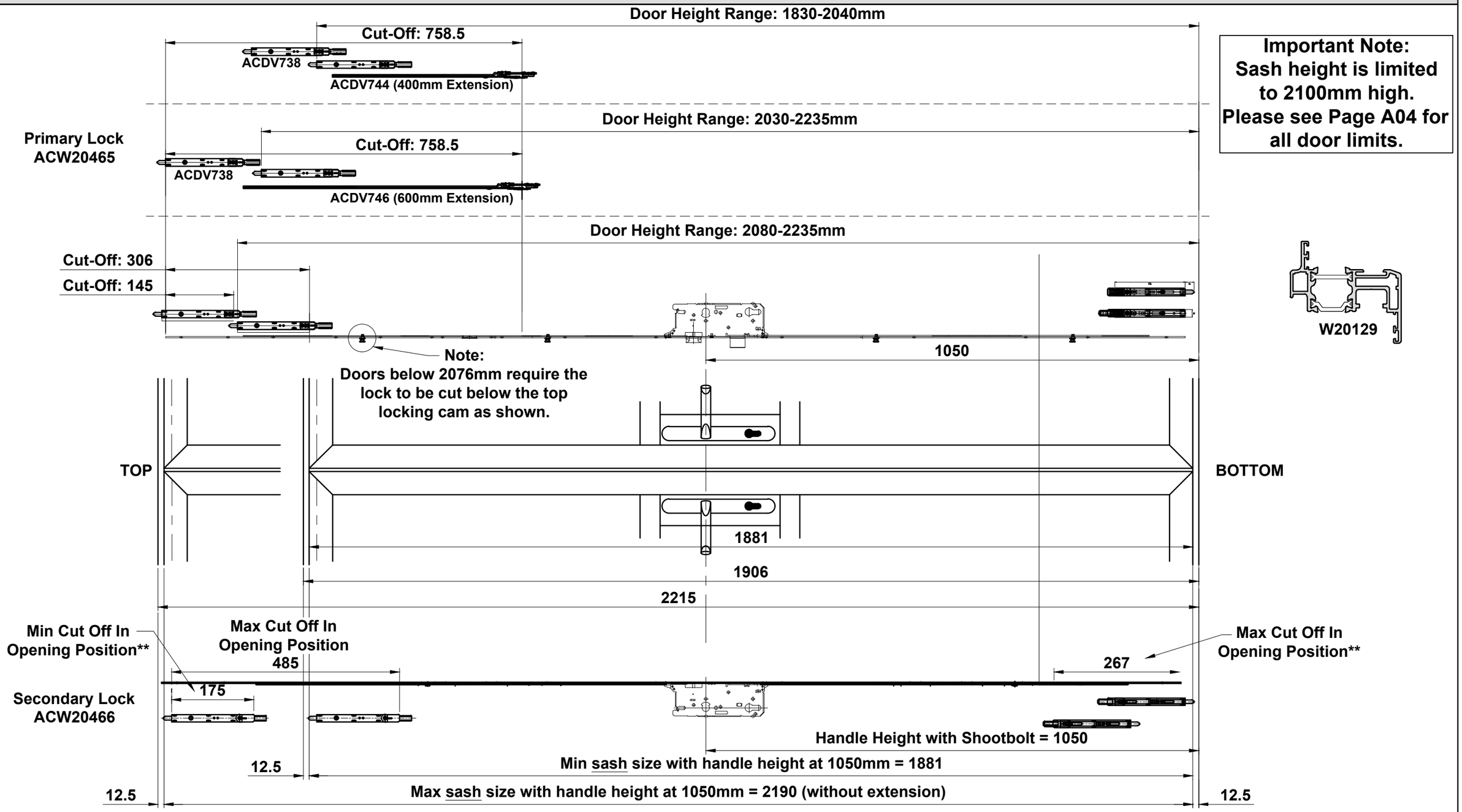


**Important Note:**
**Sash height is limited to 2100mm high.**
**Please see Page A04 for all door limits.**

**Do Not Scale From This Drawing**

## Open In Double Door Standard Threshold Using W20149 (PAS24 Option)

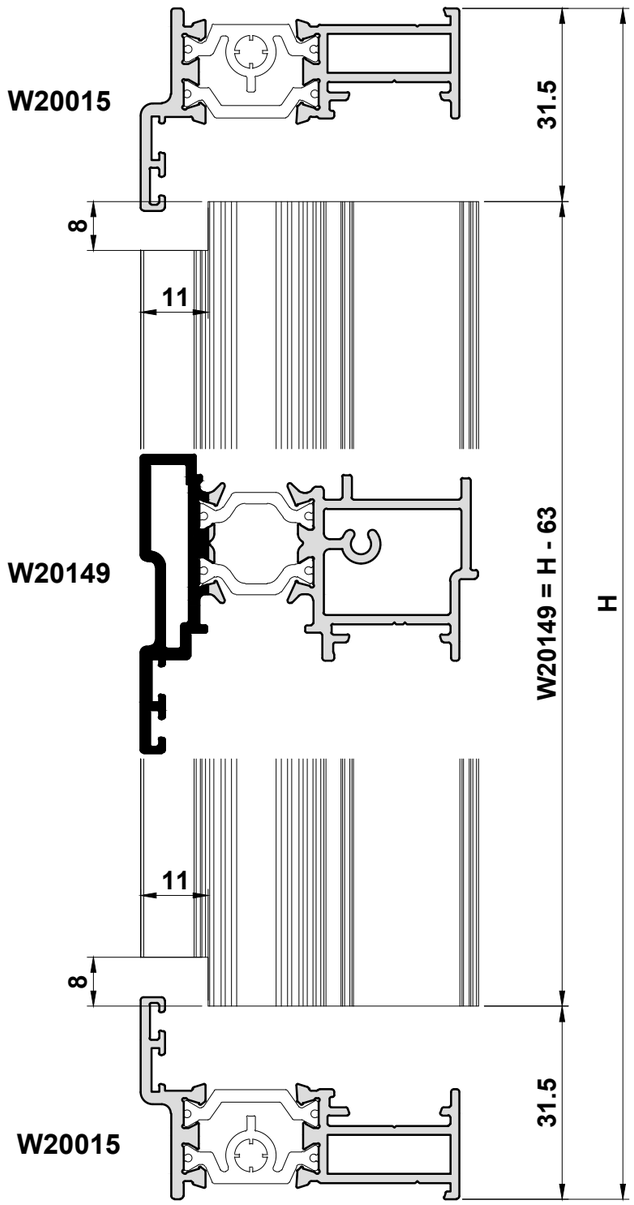


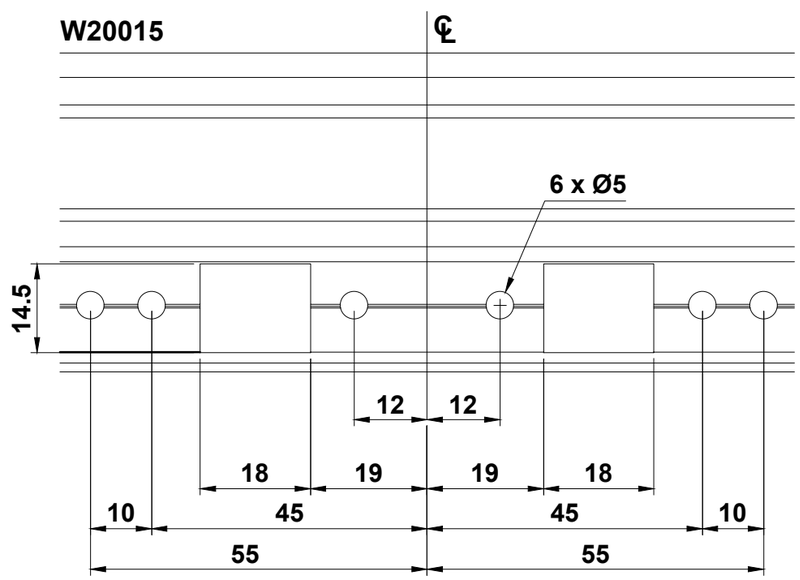


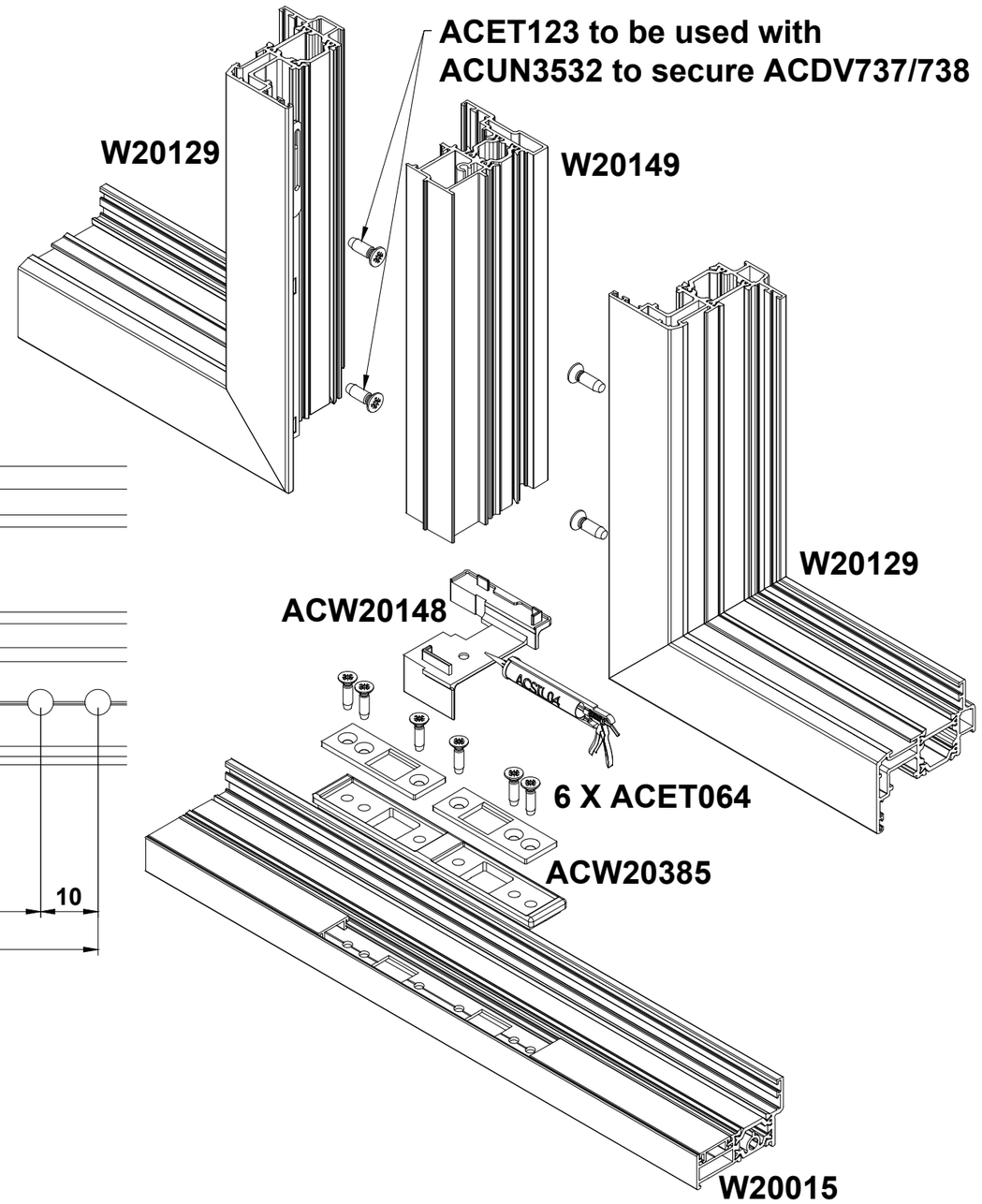


Do Not Scale From This Drawing

## Open In Double Door Low Threshold Using W20149 (PAS24 Option)

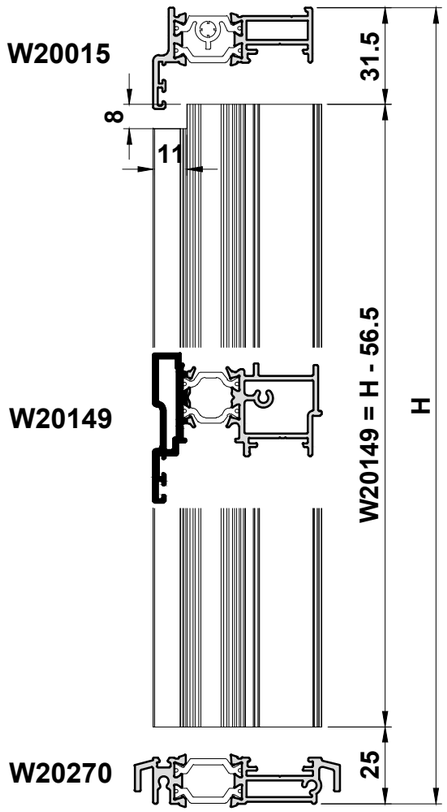


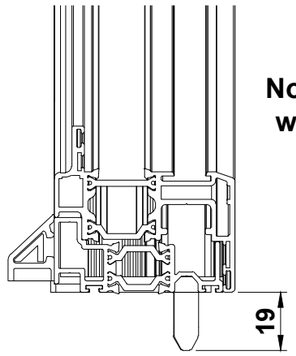


Note: Bottom of ACDV737 to align with the underside of ACW20292 for sufficient locking.

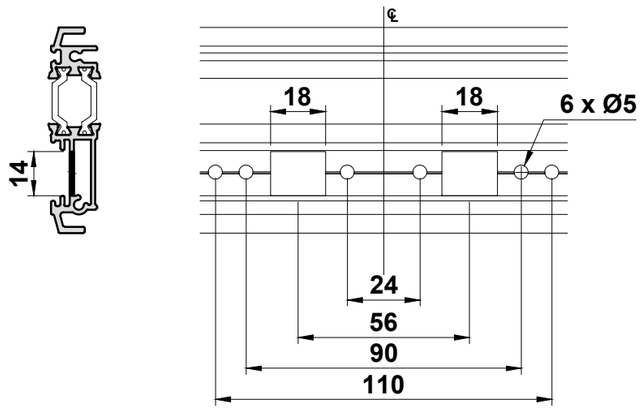


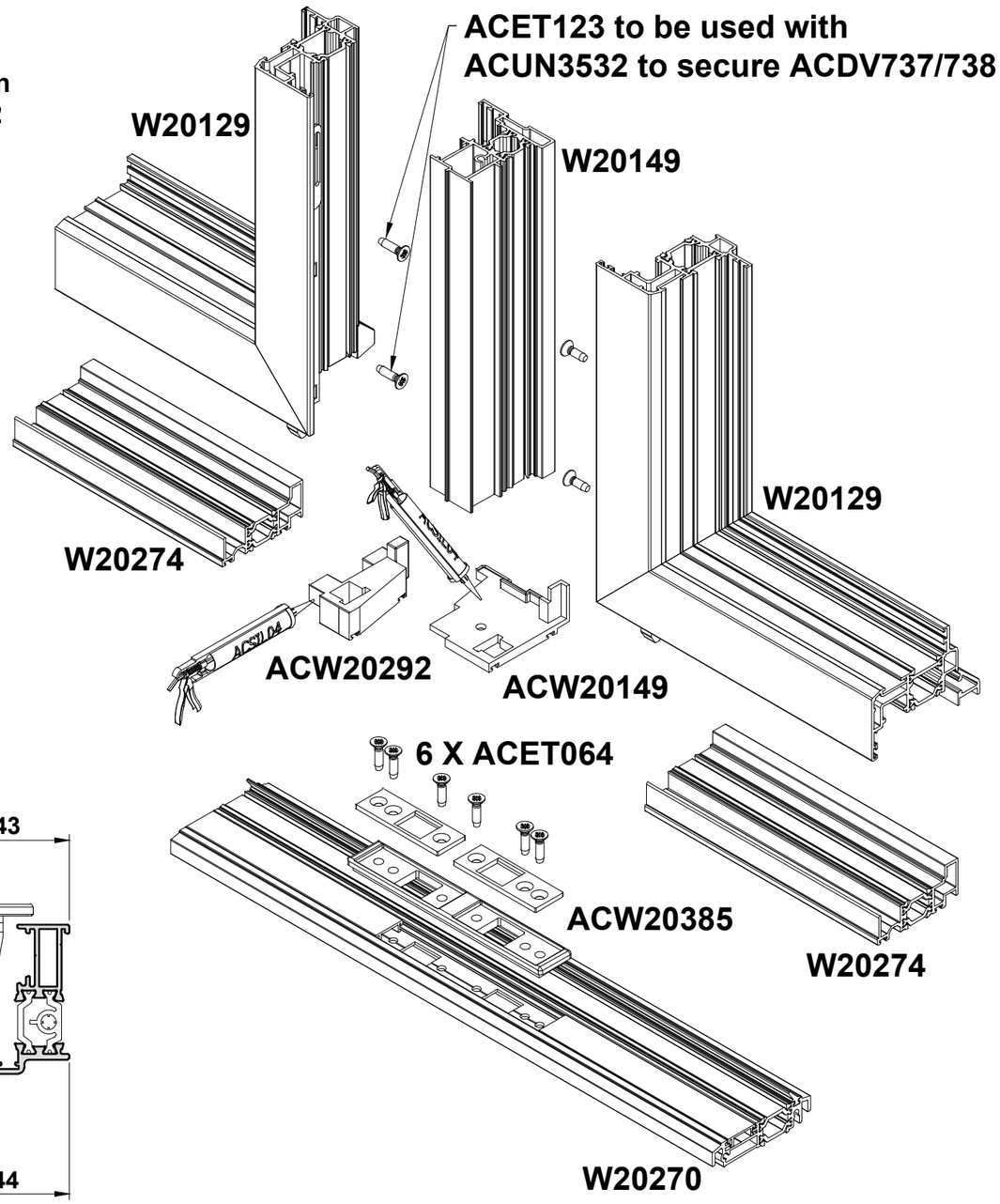


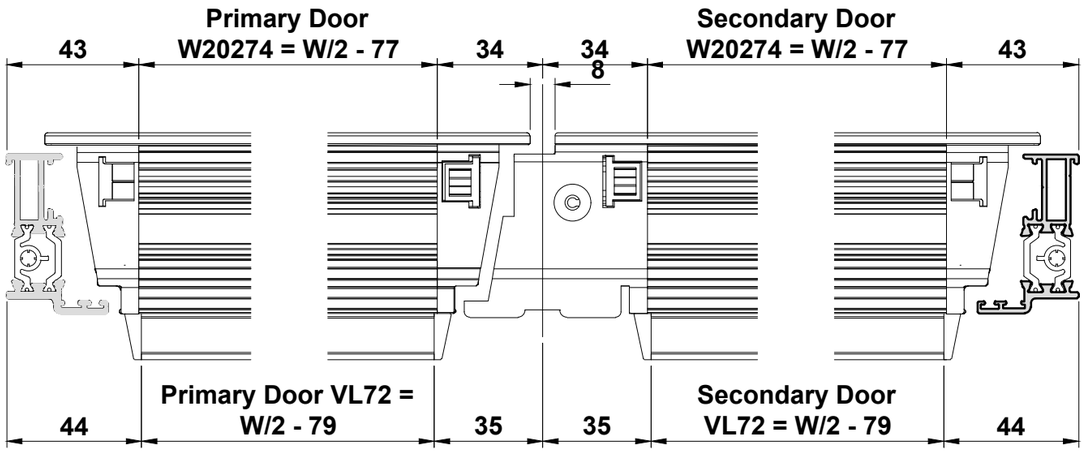


**Do Not Scale From This Drawing**

## Open In Double Door Low Threshold ACW20270 Detail

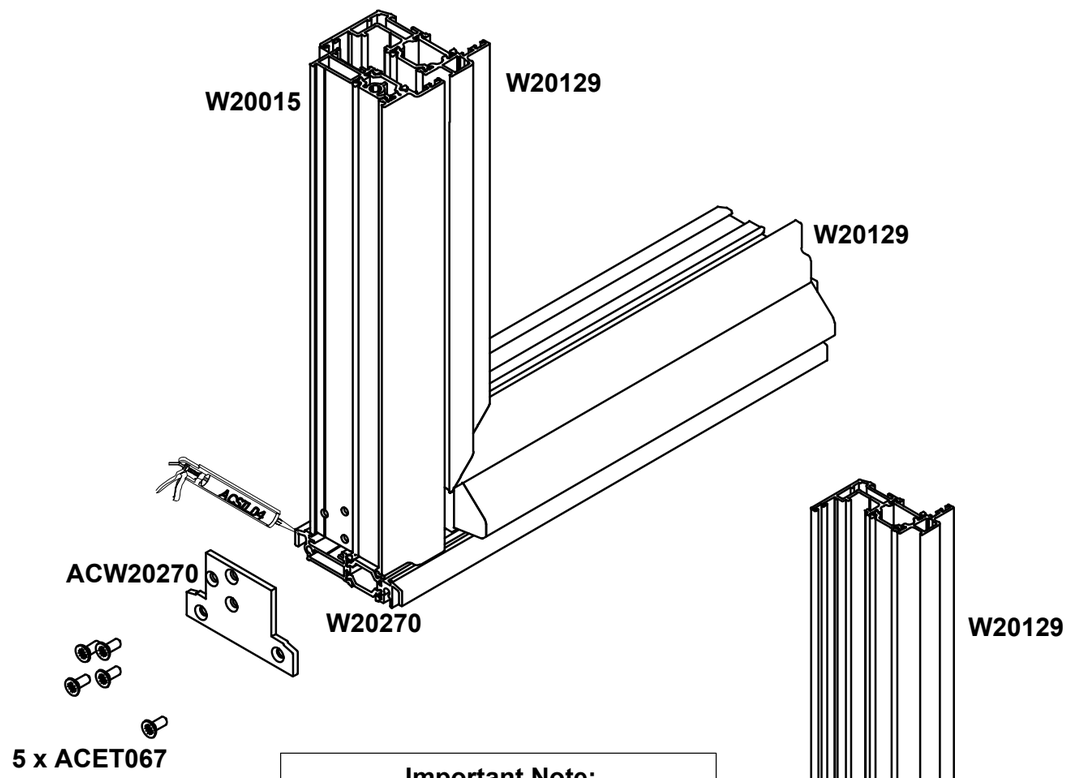


**Important Note:**
**Ensure end cap is sealed against threshold to prevent water egress.**

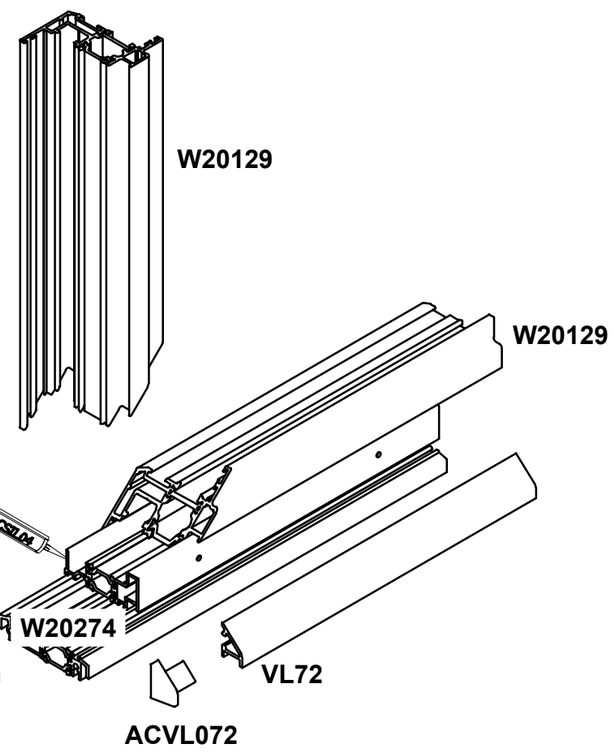


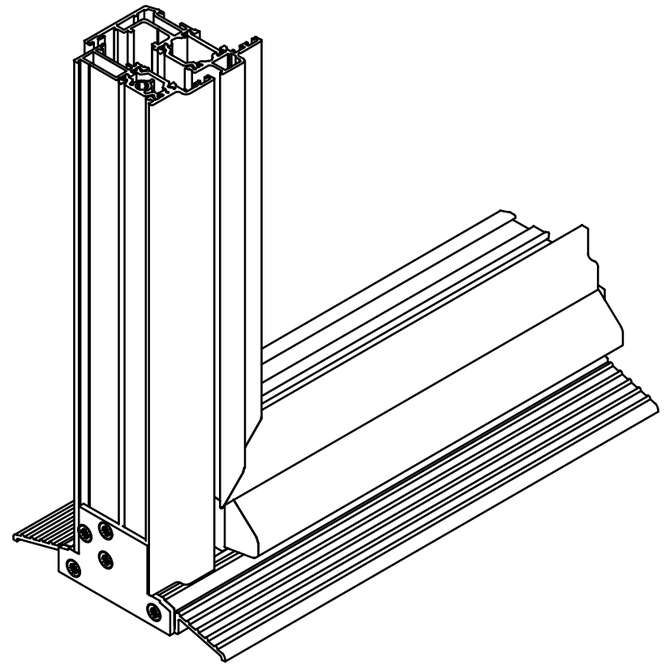

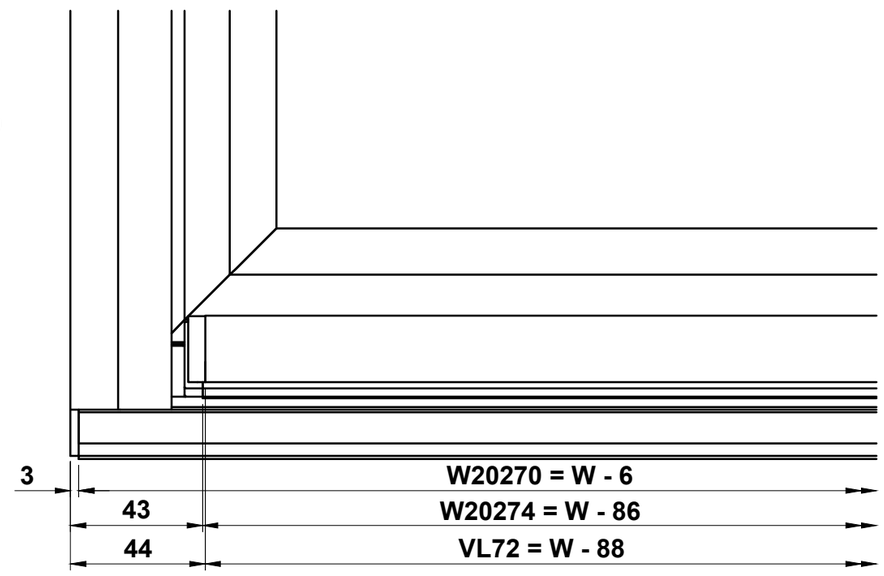


**Do Not Scale From This Drawing**

## W20125N Open In Door Hinge Details

**Recommended hinge positions**

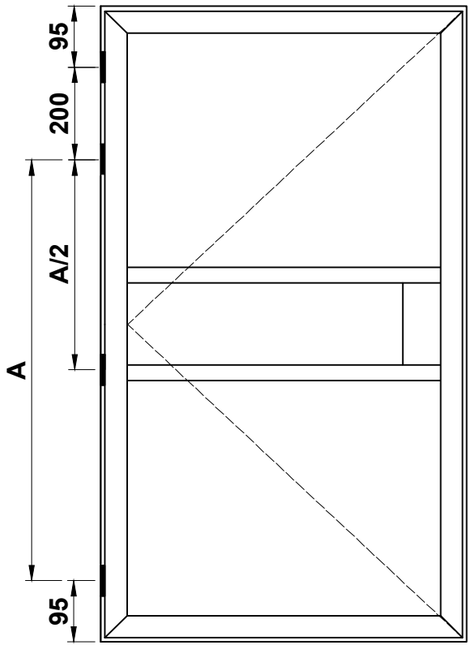


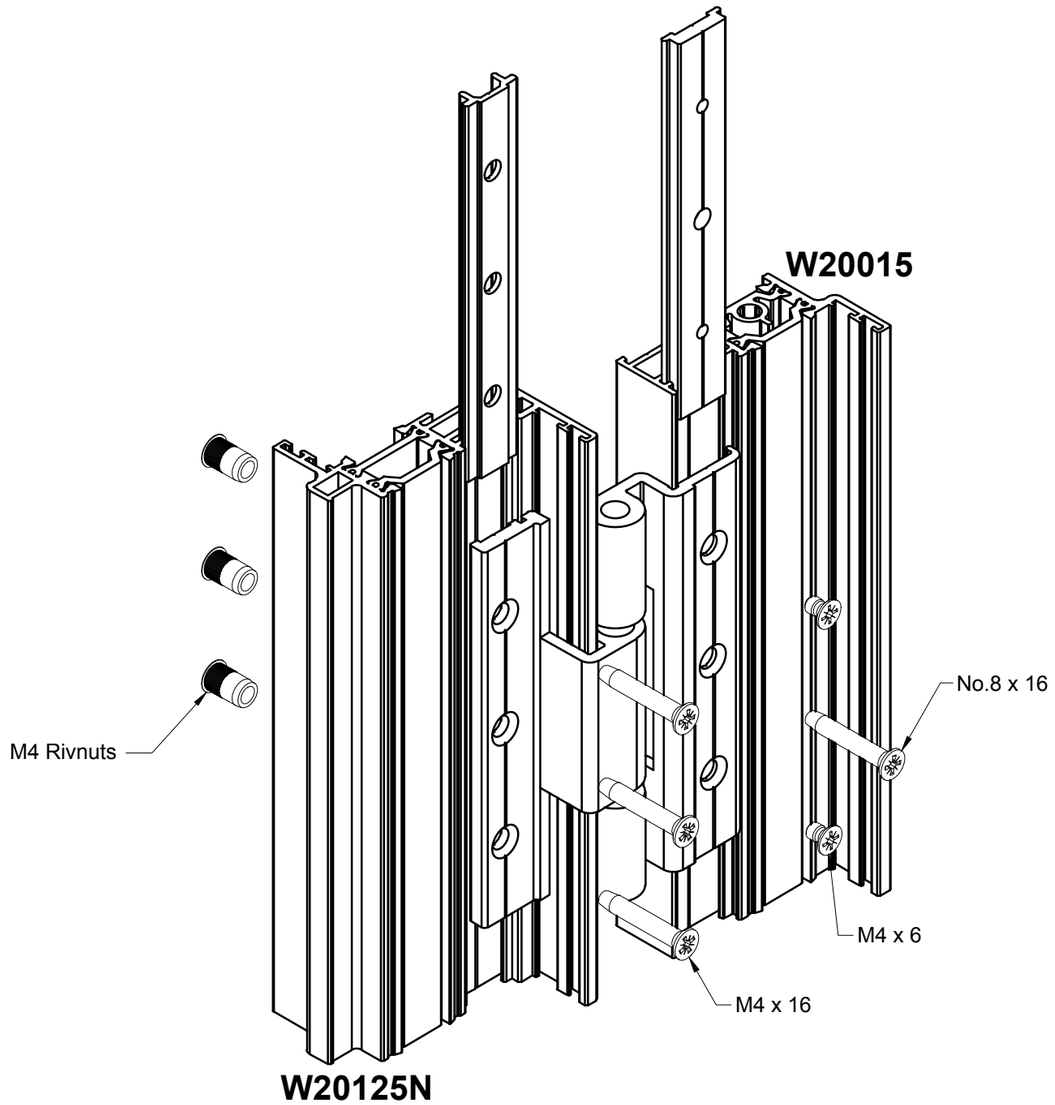


**Assembly Instructions**

1. Slide Hinge Backplates into outerframe prior to crimping.

2. Locate each hinge in outerframe and clamp in position using 2No. M4 x 6mm Countersunk screws - supplied with ACW20164.

3. Fasten Hinge to Sash through the adaptor with 3No. M4 x 16mm Screws into the rivnuts - supplied with ACW20164

4. Once the sash requires no further adjustment fix the outerframe half of the hinge with 1 x No.8 x 16mm Pozi Csk Self Tapping screw.

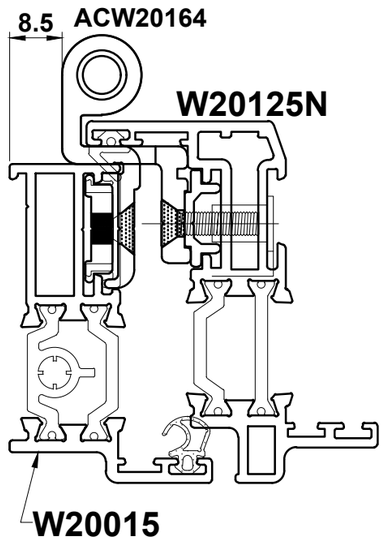


**Do Not Scale From This Drawing**

## W20129 Open In Door Hinge Details (PAS24 Option)

**Recommended hinge positions**

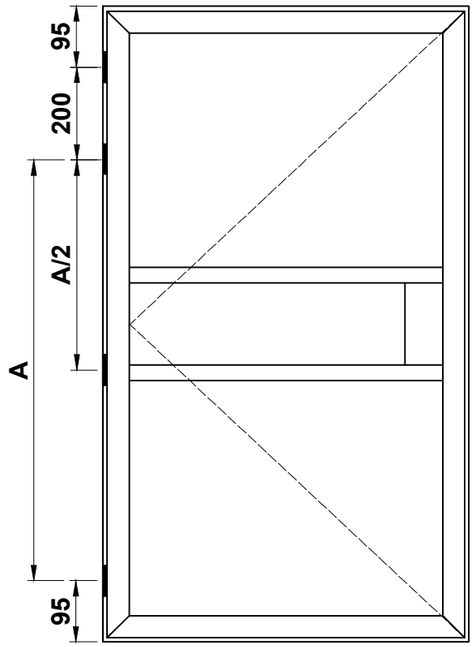


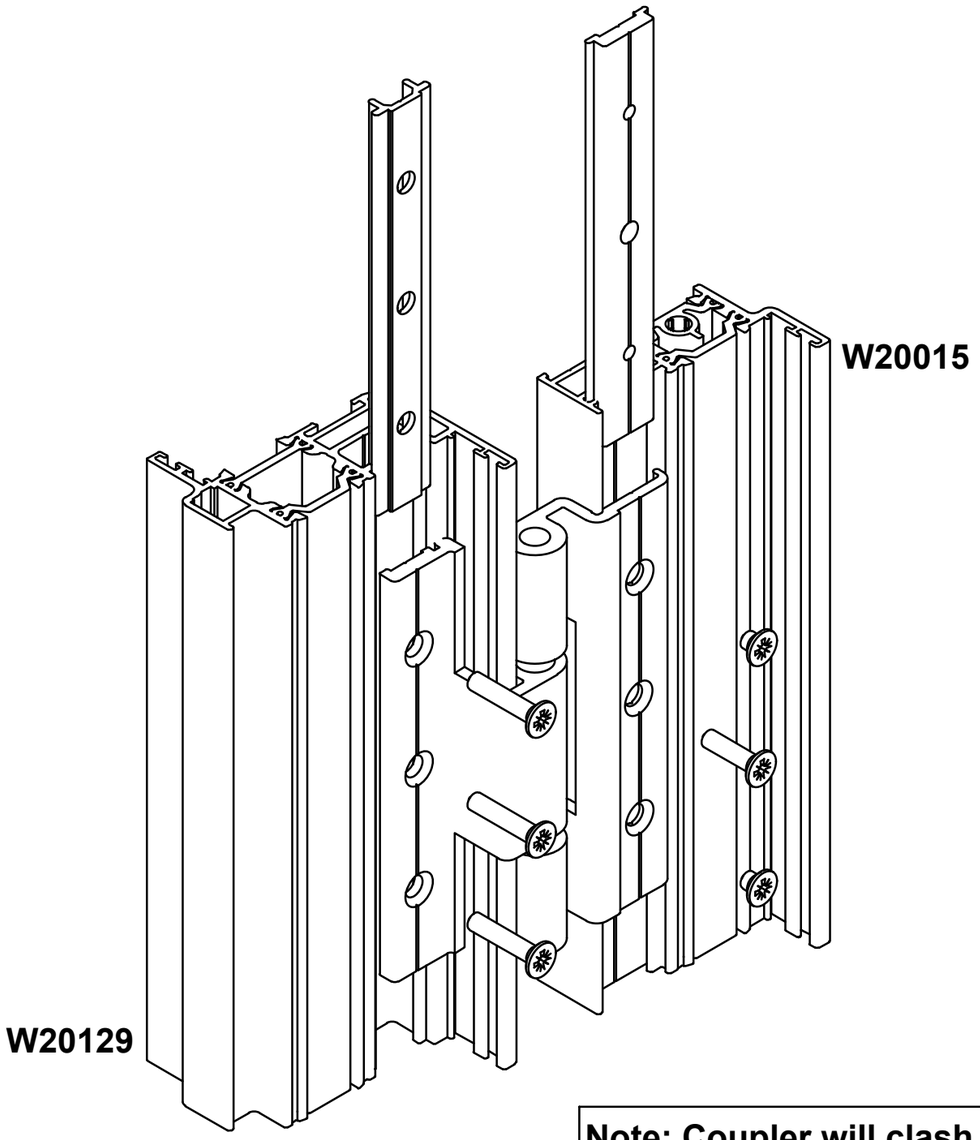


**Note: Coupler will clash with ACW20386 fixing plate**

**Assembly Instructions**

**1. Slide hinge back plates into W20015 and W20129 before crimping.**

**2. Use the hinge to park the hole positions on W20129. Drill a 4.5mm clearance holes for M4 CSK machine screws. Fasten hinges to W20129 with M4 machine screws into fixing plate**

**3. Fit W20129 into W20015 then fasten hinge to outer frame fixing hinges to W20015 frame back plates.**

**4. Once W20129 requires no further adjustment fix through center hinge hole to dead fix.**

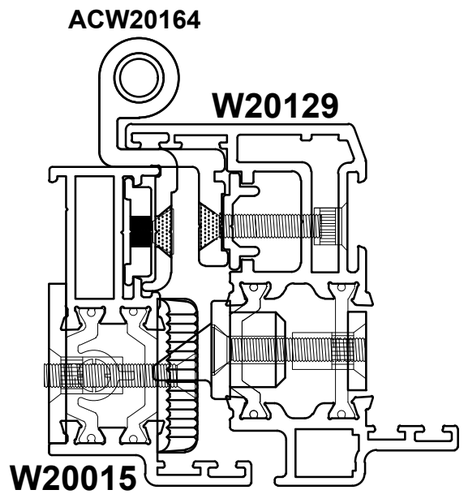

## Open In 90° Restrictor Installation

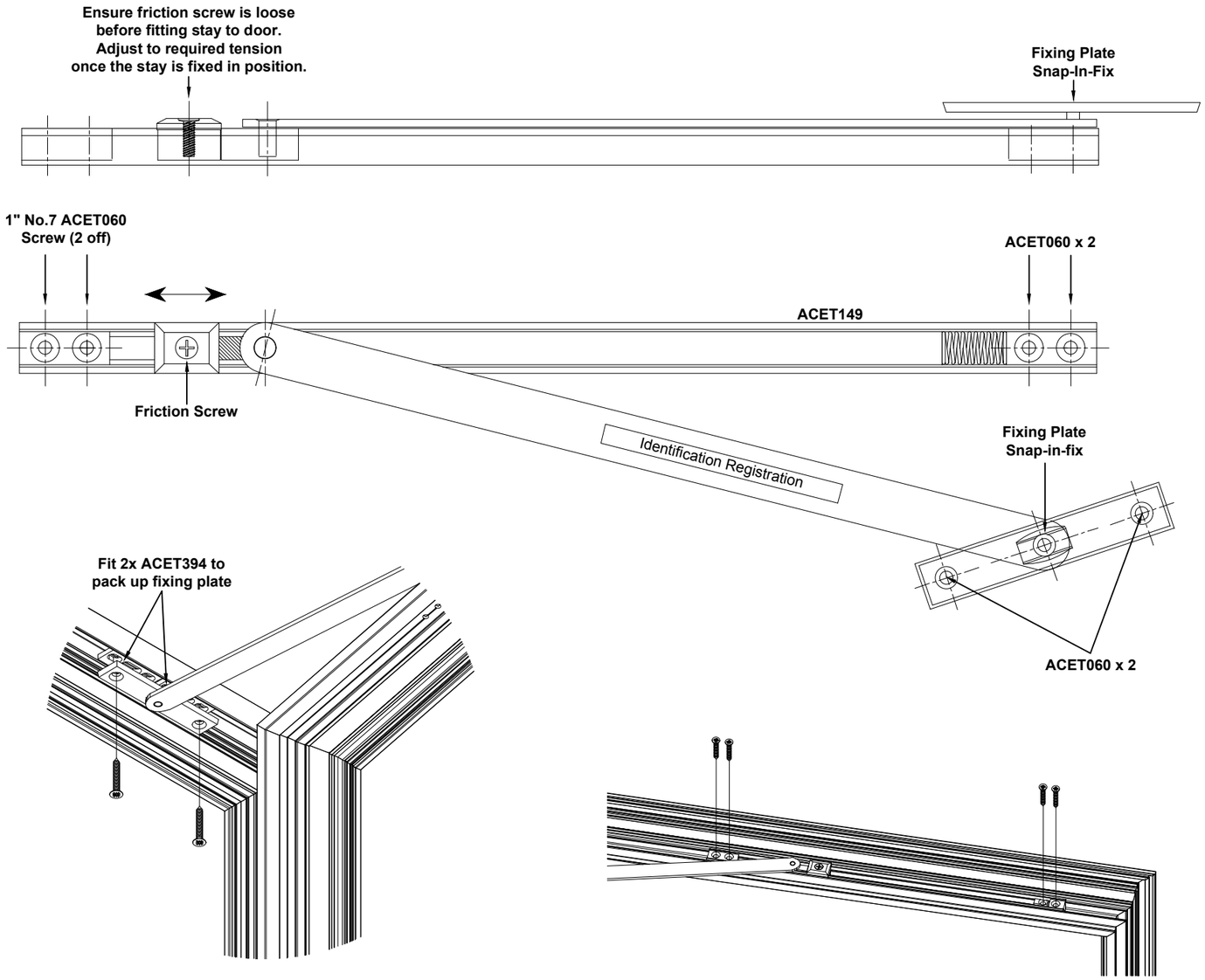


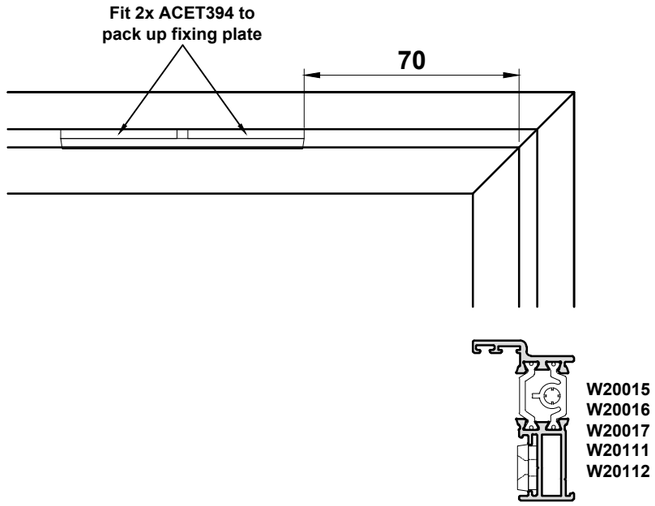


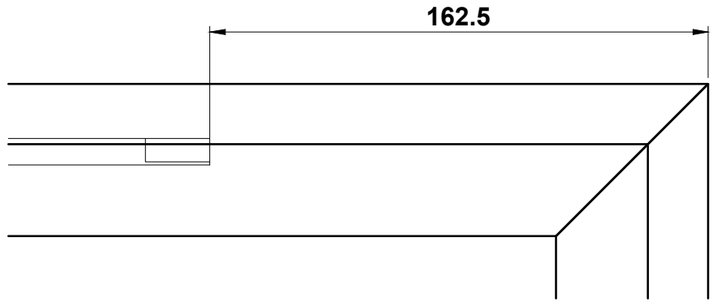


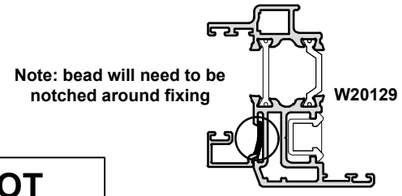


**NOTE: ACET149 IS NOT COMPAITBLE WITH W20125N**

**Do Not Scale From This Drawing**

# PAS24 Open In Single Door Full Requirements

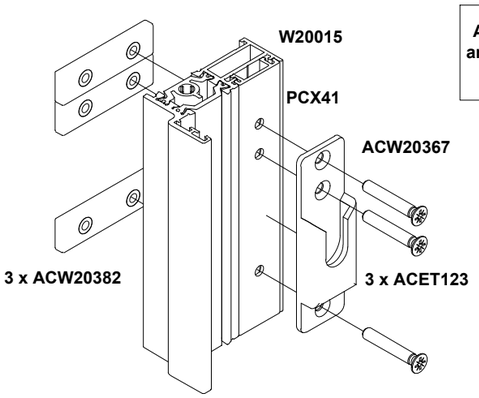


ACW20367 Roller Keep to be fixed through PCX41 and both skins of aluminum using ACET123 fixings and into ACW20382 reinforced M4 Fixing Plate.

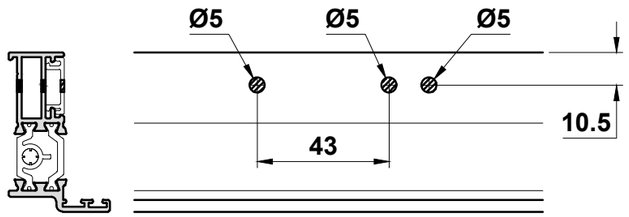


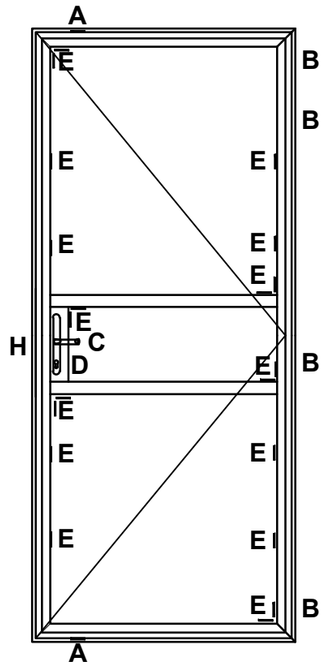


## Single Door

### Accessories Required to Achieve PAS24:2016

| | | |
|---|---|---|
| A | Guide Blocks | ACET380 |
| B | Hinges/Hinge Protectors | ACW20164/ACW20375 |
| C | Lever/Lever Handle | ACSM001N |
| D | Cylinder | ACCY4525NKTTS3 |
| E | Glass Packer Positions | |
| | Centre Keep | ACW20166 |
| | Roller Keep | ACW20367 |
| | Lock | ACW20465 |

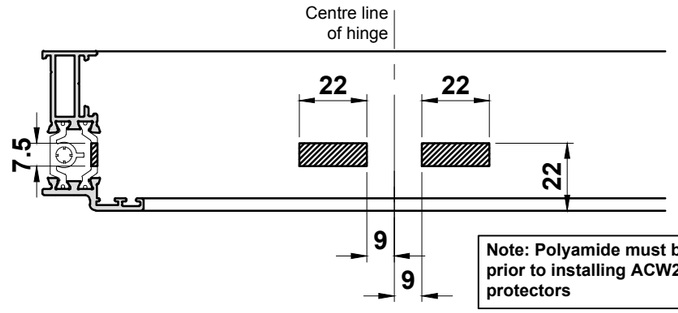


Note: Polyamide must be routed out prior to installing ACW20375 hinge protectors

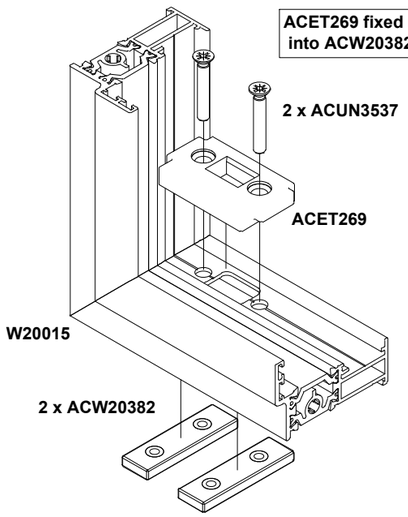


ACET269 fixed using ACUN3537 fixings and into ACW20382 reinforced M4 Fixing Plate.

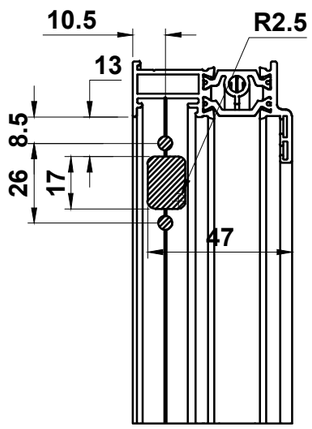


Refer back to Section C for details of sections

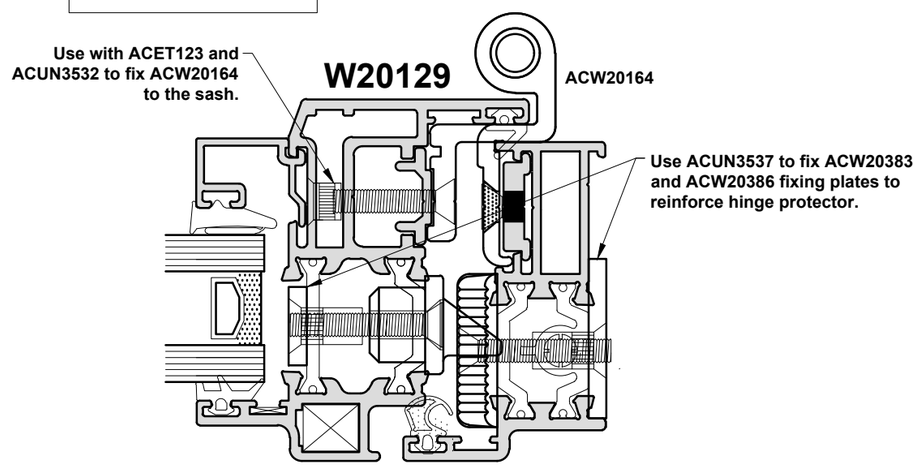

## PAS24 Open In Double Door Full Requirements

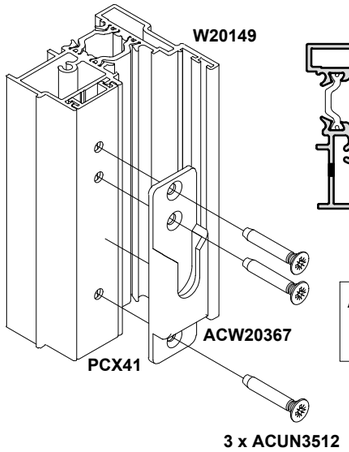


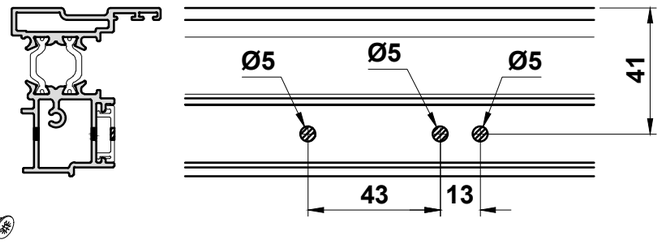


ACW20367 Roller Keep to be fixed through PCX47 and into first skin of aluminum of W20149 using ACUN3512 fixings.

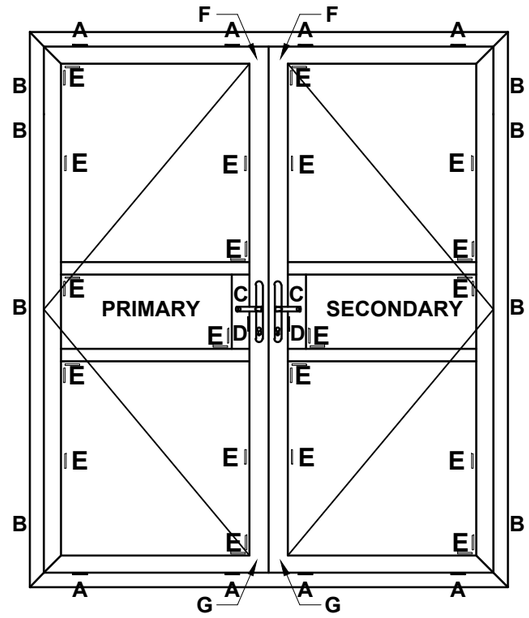


## Double Door

### Accessories Required to Achieve PAS24:2016

| | | |
|---|---|---|
| A | Guide Blocks | ACET380 |
| B | Hinges/Hinge Protector | ACW20164/ACW20375 |
| C | Lever/Lever Handle | ACSM001N |
| D | Cylinder | ACCY4525NKTTS3 |
| E | Glass Packer Positions | |
| F | Top Shootbolt/Keep | ACDV738/ACW20385 |
| G | Bottom Shootbolt/Keep | ACDV737/ACW20385 |
| | Centre Keep | ACW20166 |
| | Roller Keep | ACW20367 |
| | Primary Lock | ACW20465 |
| | Secondary Lock | ACW20466 |

Refer back to Section C for details of sections

**Note: Please see single door PAS24 page to see preparation for the hinge side of the double door.**

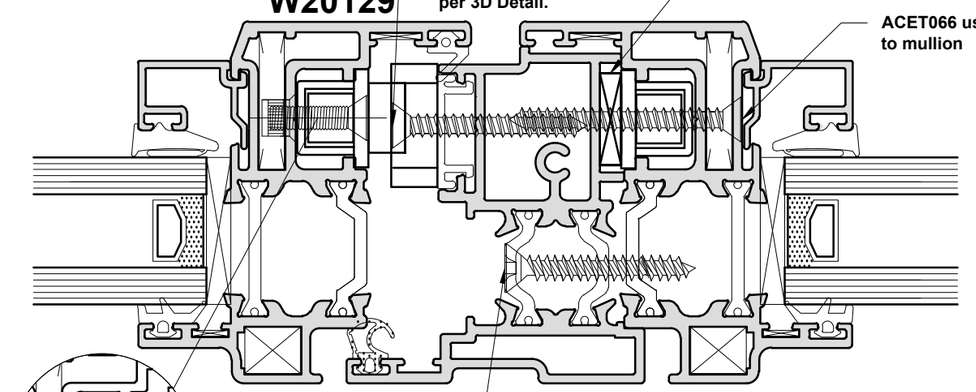


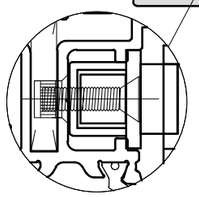

ACET101 to be used with ACUN3532 to secure shootbolt

ACET392 Polyamide screw must be used to fix mullion to sash for reinforcement

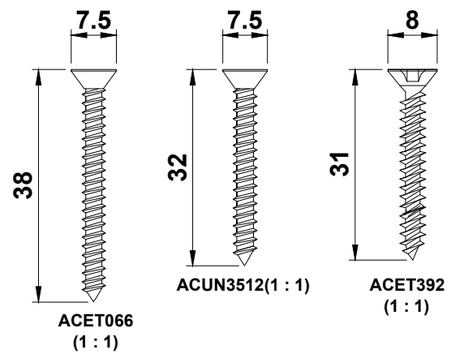


Do Not Scale From This Drawing

E W

Construction Drawings

Glazing Chart..... E45 - E48
W20015 Bay Pole Details..... E49
W20017 Bay Pole Details..... E50
Fixing Strap Guide..... E51

**Do Not Scale From This Drawing**

## Glazing Chart

### 11mm Glazing

**Gasket Glazed**

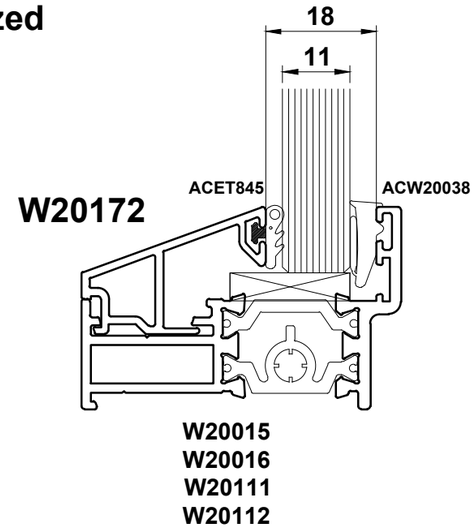


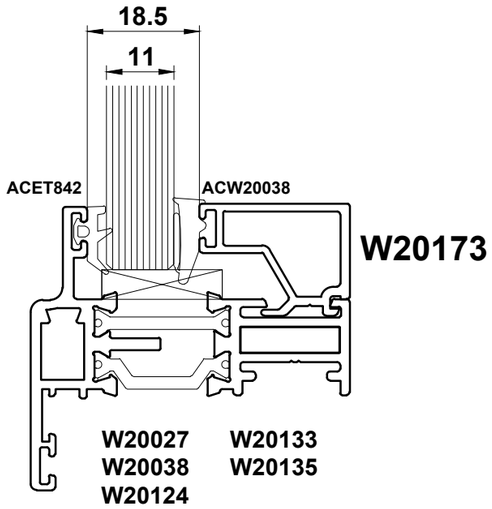


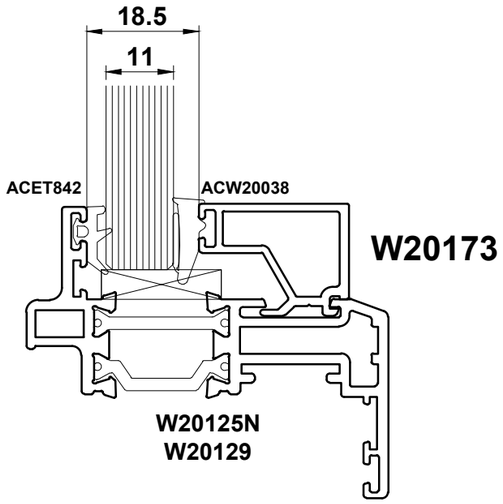


### 11mm Glazing

**Tape Glazed**

**Important Notes:**

- Glazing tape must be coated with silicone after installation
- Tape glazing is only available for the sections shown to the right

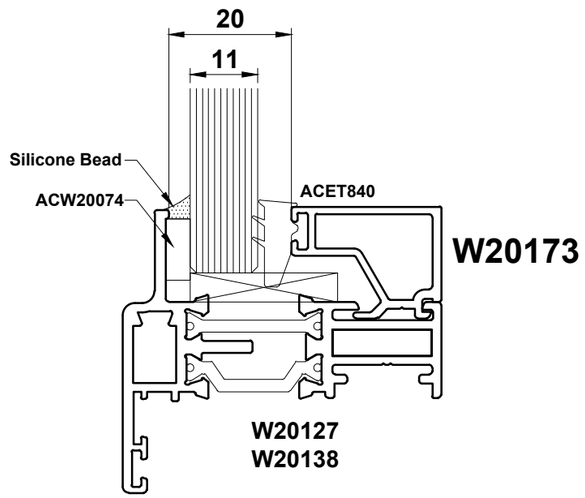


Do Not Scale From This Drawing

## Glazing Chart

### 24mm Glazing

**Gasket Glazed**

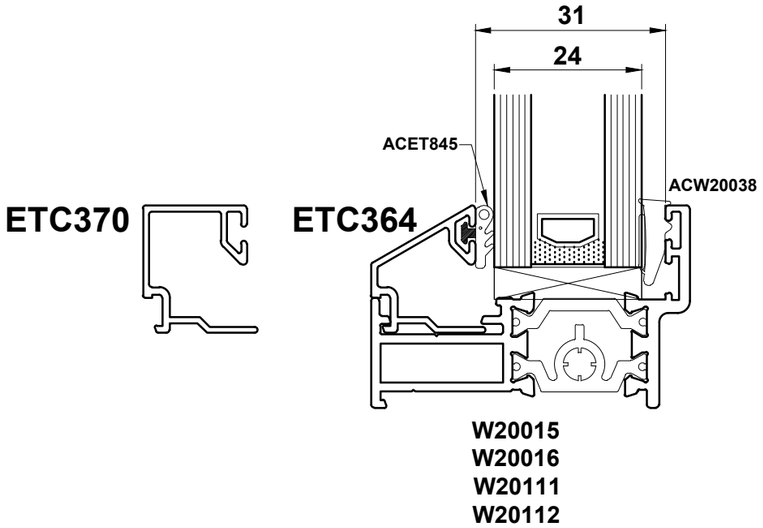


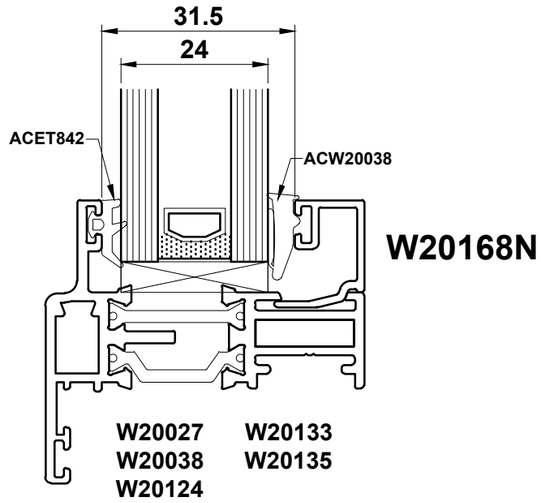


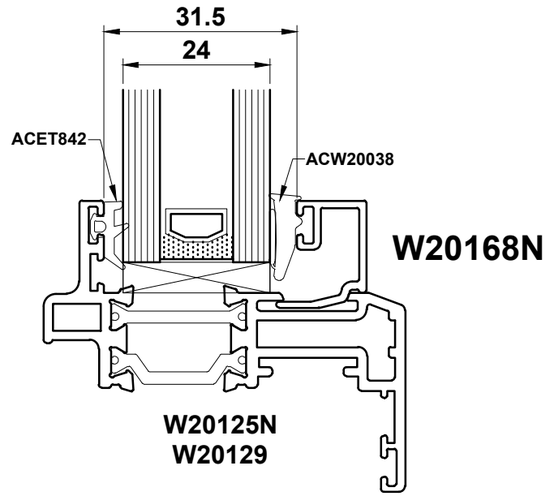


### 24mm Glazing

**Tape Glazed**

**Important Notes:**

- Glazing tape must be coated with silicone after installation
- Tape glazing is only available for the sections shown to the right

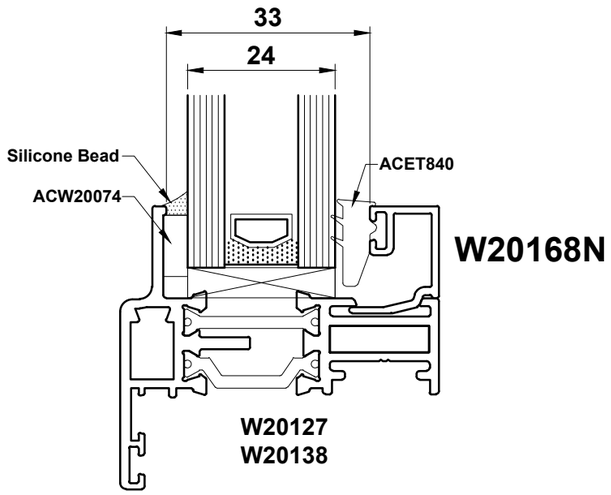


**We recommend the use of Black Spacer Bar in the sealed units**

Do Not Scale From This Drawing

## Glazing Chart

# 28mm Glazing

### Gasket Glazed

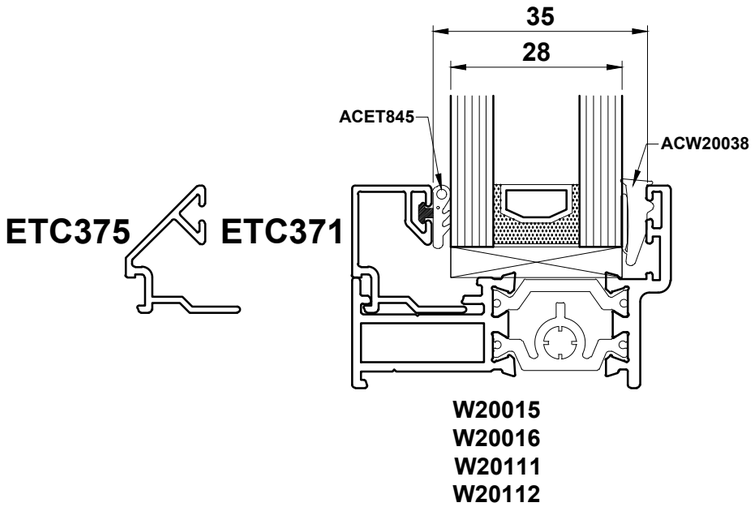


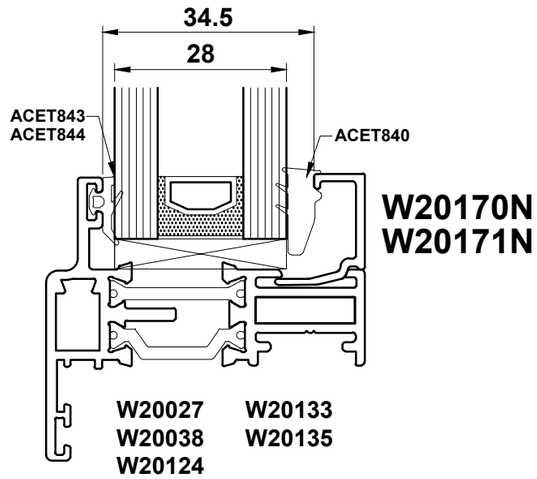


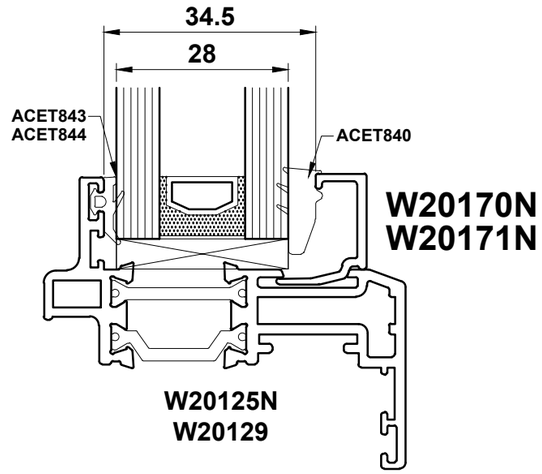


# 28mm Glazing

### Tape Glazed

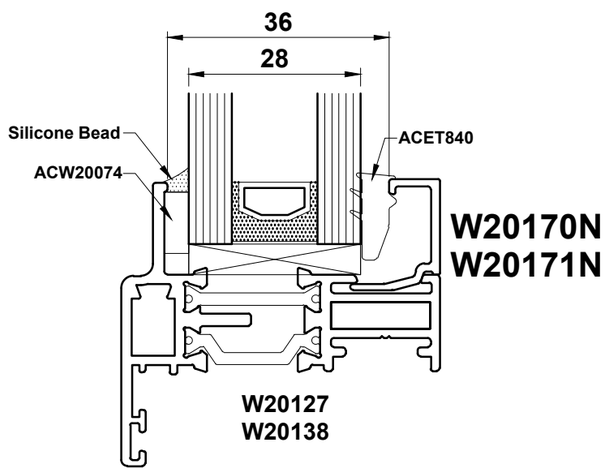


**Important Notes:**

- Glazing tape must be coated with silicone after installation
- Tape glazing is only available for the sections shown to the right

## Glazing Chart

### 32mm Glazing

**Gasket Glazed**

**Important Note: 32mm & 36mm glazing is compatible with the below sections only.**

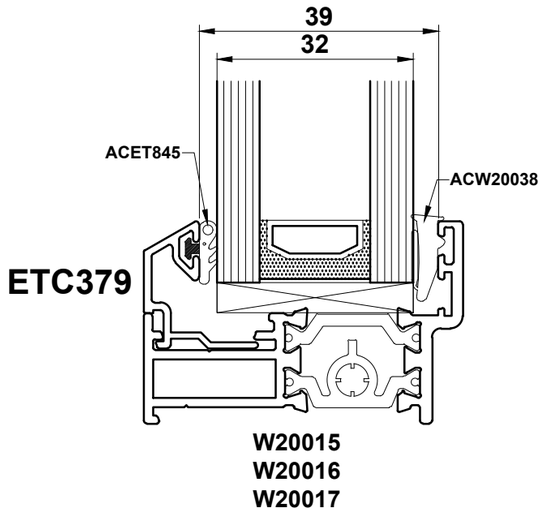


### 36mm Glazing

**Gasket Glazed**

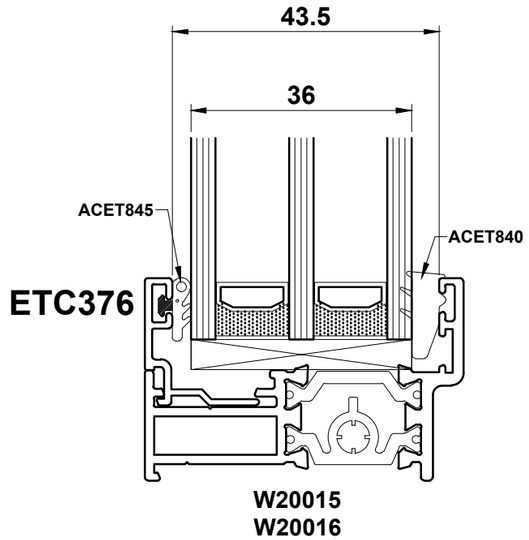


**We recommend the use of Black Spacer Bar in the sealed units**

**Do Not Scale From This Drawing**

## W20015 Bay Pole Selection

**When using W20069 on a cill, we recommend using SPD750 infill to position the assembly forward over the drainage channel.**

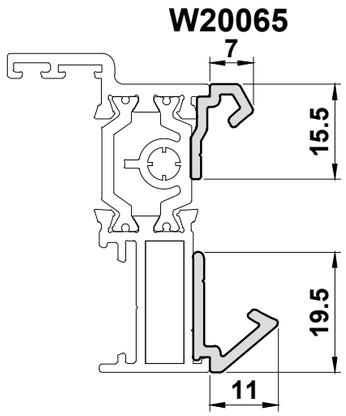


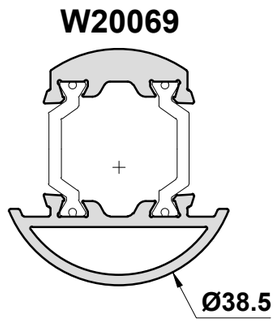


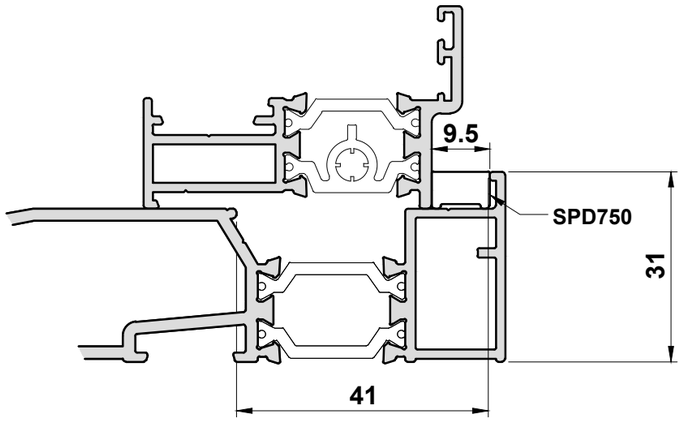


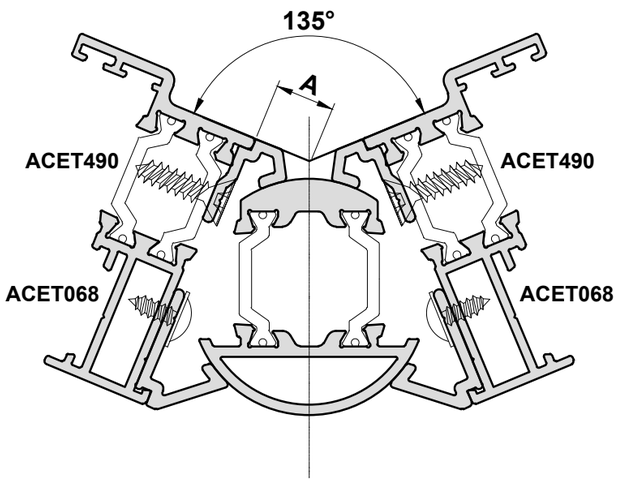


| ANGLE | DEDUCTION 'A' |
|---|---|
| 180° | 18 |
| 175° | 17 |
| 170° | 16 |
| 165° | 15.5 |
| 160° | 14.5 |
| 155° | 13.5 |
| 150° | 12.5 |
| 145° | 11.5 |
| 140° | 10.5 |
| 135° | 9.5 |
| 130° | 8.5 |
| 125° | 7.5 |
| 120° | 6.5 |
| 115° | 5 |

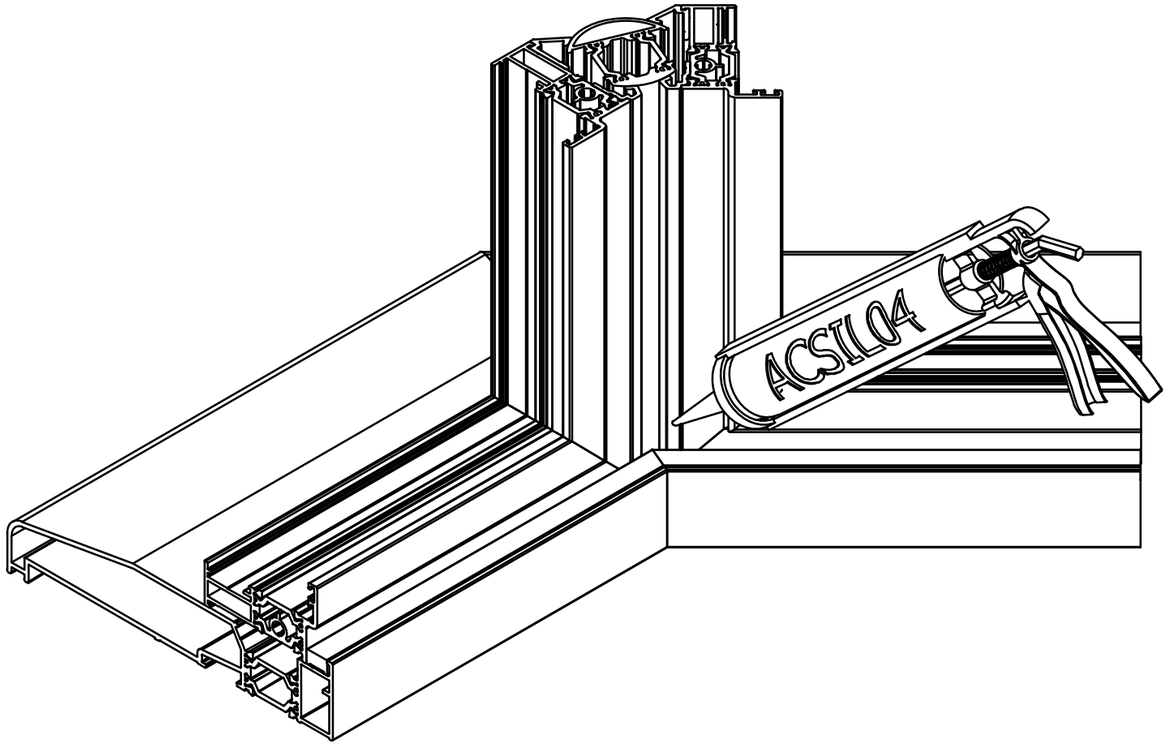


**Do Not Scale From This Drawing**

## W20017 Bay Pole Selection

169°

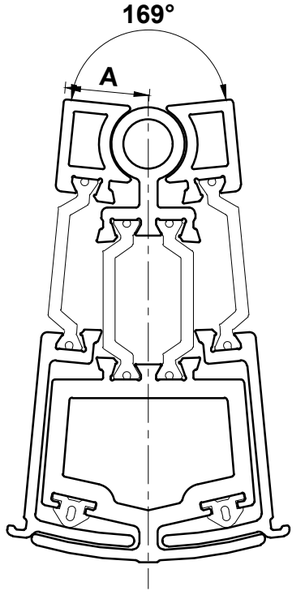

**Important Note:**
**All joints must be adequately sealed using ACSIL04**

149°

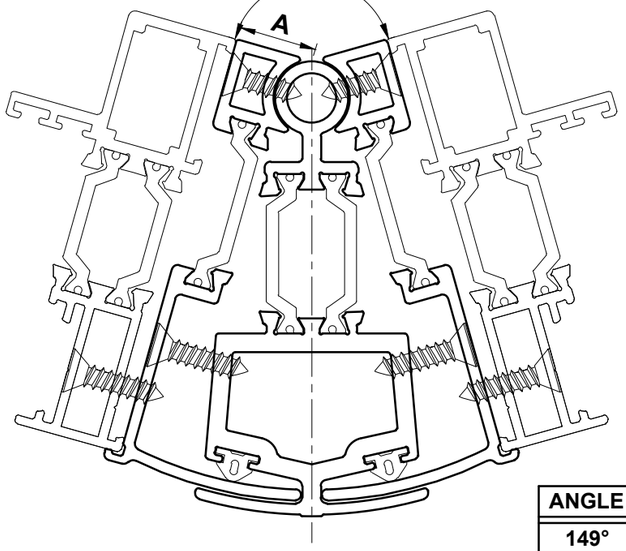


129°

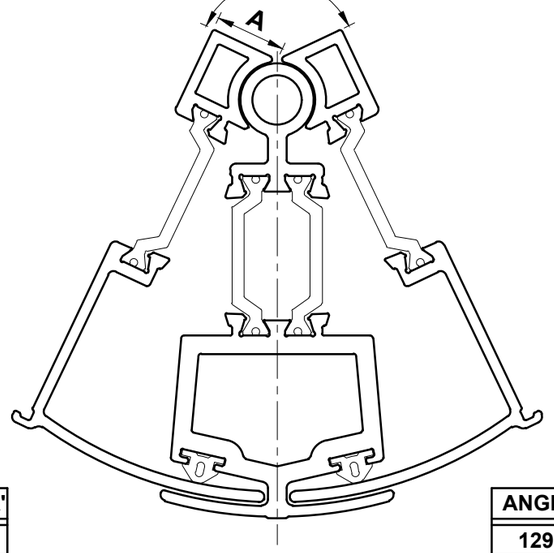

| ANGLE | DEDUCTION 'A' |
|---|---|
| 169° | 14 |
| 165° | 13.5 |
| 160° | 13.6 |
| 155° | 13 |
| 150° | 13 |

| ANGLE | DEDUCTION 'A' |
|---|---|
| 149° | 12.5 |
| 145° | 12.5 |
| 140° | 12 |
| 135° | 12 |
| 130° | 11.5 |

| ANGLE | DEDUCTION 'A' |
|---|---|
| 129° | 11.5 |
| 125° | 11.5 |
| 120° | 11 |
| 115° | 10.5 |

150°

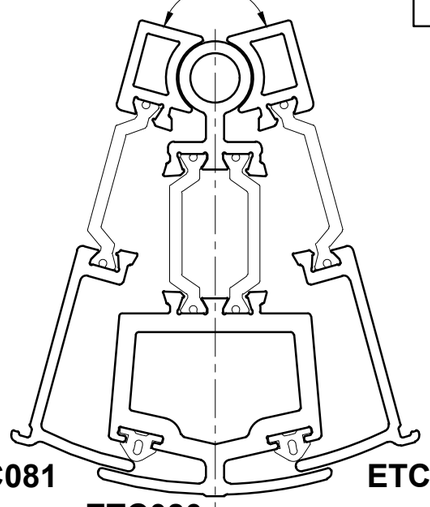

ETC081 ETC081

ETC080

130°

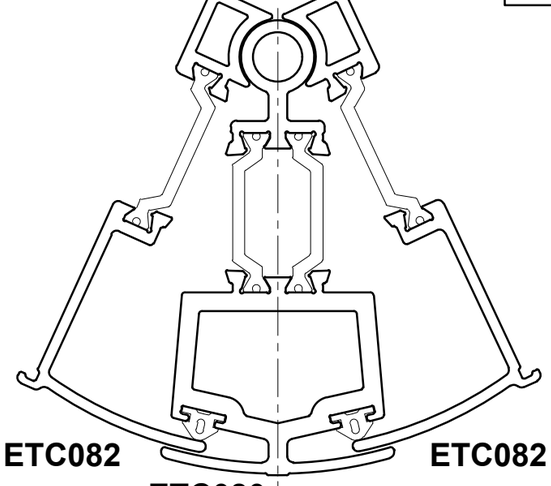

ETC082 ETC082

ETC080

115°

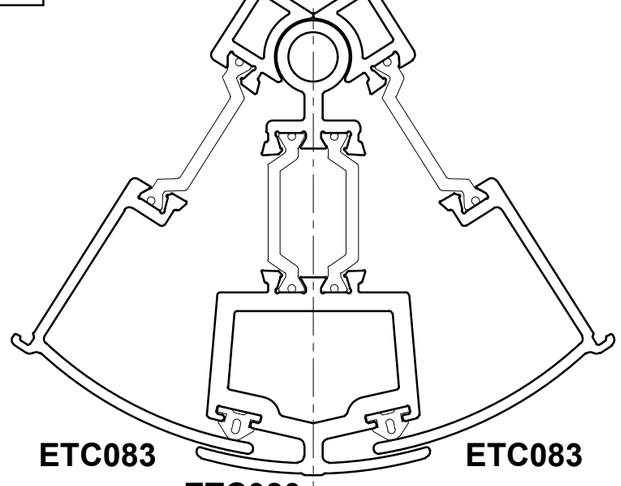

ETC083 ETC083

ETC080

**Do Not Scale From This Drawing**

## Fixing Strap Guide

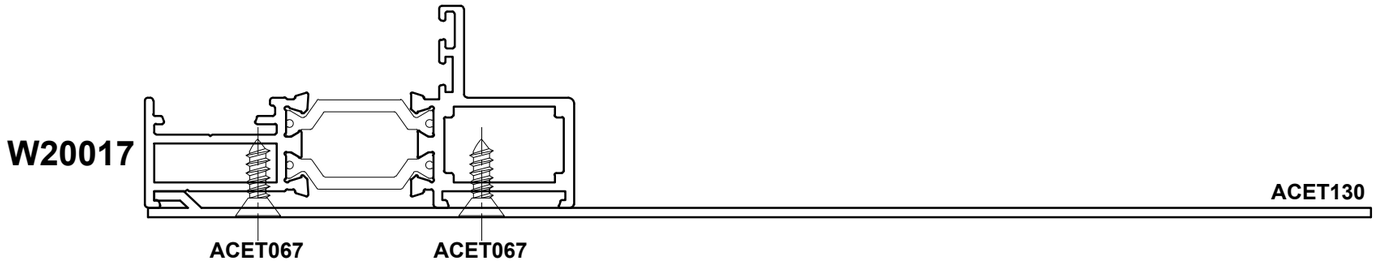

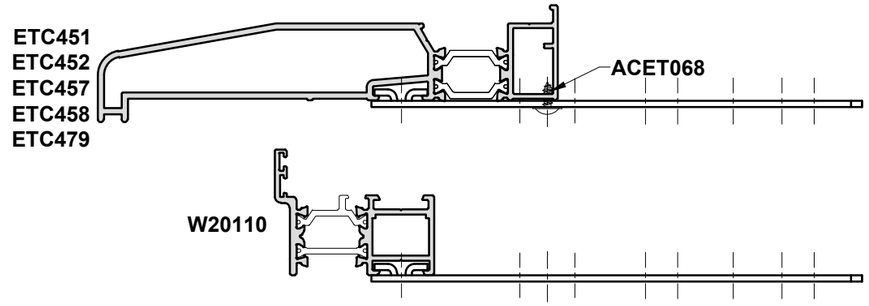


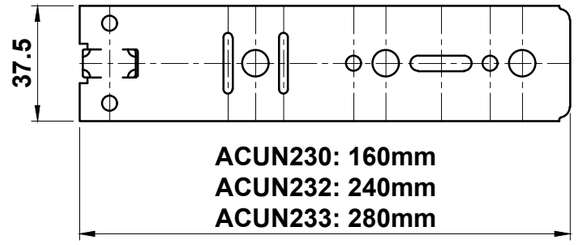


NOTE:
**Fixing straps should be spaced a minimum of 150mm in from each end & at a maximum of 300mm apart.**

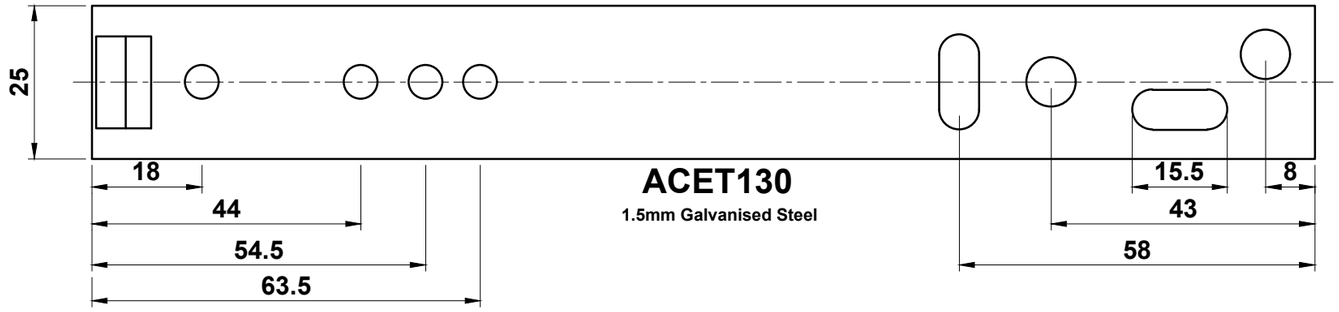


**Do Not Scale From This Drawing**

# Section F

F W

## Sawing Table

Open Out Single Door..... F03 - F04
Open Out Double Door..... F05 - F06
Open In Single Door..... F07 - F08
Open In Double Door..... F09 - F10
PAS24 Open Out Single Door..... F11 - F13
PAS24 Open Out Double Door..... F14 - F15
PAS24 Open In Single Door..... F16 - F17
PAS24 Open In Double Door..... F18 - F19

## Section F

# Cutting Information - Open Out Single Door

**Profiles**

| | | |
|---|---|---|
| W20111 | 2 | H |
| W20111 | 2 | W |
| W20027 | 2 | W - 54 |
| W20027 | 2 | H - 54 |
| W20135 | 2 | W - 116 |
| W20168N | 4 | W - 116 |
| W20168N | 2 | W - 181.5 |
| W20168N | 2 | H1 - 94.5 |
| W20168N | 2 | H2 - 94.5 |
| W20168N | 2 | H3 - 42.5 |
| ACW20138 | 1 | 285 |
| PCX41 | 2 | H - 65 |
| PCX41 | 2 | W - 65 |

**Accessories**

| | | | | | |
|---|---|---|---|---|---|
| ACCY4525NKTTS3 | Cylinder | 1 | ACW20065 | Multi-Point Lock | 1 |
| ACET045 | S/S Chevron | 4 | ACW20066L/R | Centre Keep | 1 |
| ACET066 | Transom/Mullion Screw | 10 | ACW20067 | Roller Keeps | 4 |
| ACET067 | S/S CSK S/T Screw | 15 | ACW20127 | Vent Frame Cleats | 4 |
| ACET160R | Outer Frame Seal | 2(W-60) + 2(H-60) | ACW20160 | Outerframe Screw | 4 |
| ACET160R | Vent Frame Seal | 2(W-25) + 2(H-25) | ACET313 | Outerframe Foam | 2H + 2W |
| ACET310 | Outer Frame Cleats | 4 | | | |
| ACET380 | Run Up Block | 1 | | | |
| ACET390 | Polyamide Screw | 8 | | | |
| ACET842 | E Gasket | 6(W-95) + 2(H-95) | | | |
| ACGSL045 | Drainage Cap | 2 | | | |
| ACSM001N | Door Handle | 1 Pair | | | |
| ACW20024 | S/S Chevron | 4 | | | |
| ACW20038 | Wedge Gasket | 6(W-95) + 2(H-95) | | | |
| ACW20056 | Vent Frame Cleats | 4 | | | |
| ACW20060 | Butt Hinge | 4 | | | |

**Glass**

| | | |
|---|---|---|
| G1 | 1 x | W - 124 x H1 - 72 |
| G2 | 1 x | W - 124 x H2 - 72 |
| G3 | 1 x | W - 189.5 x H3 - 20 |

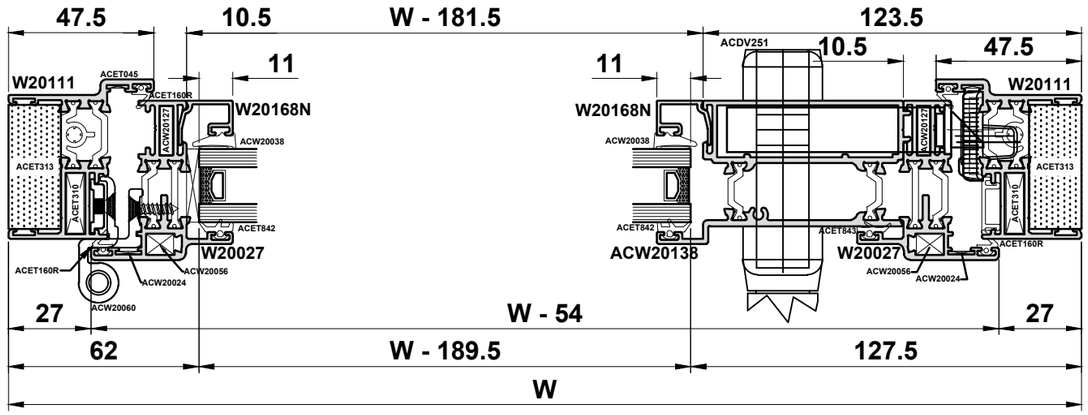


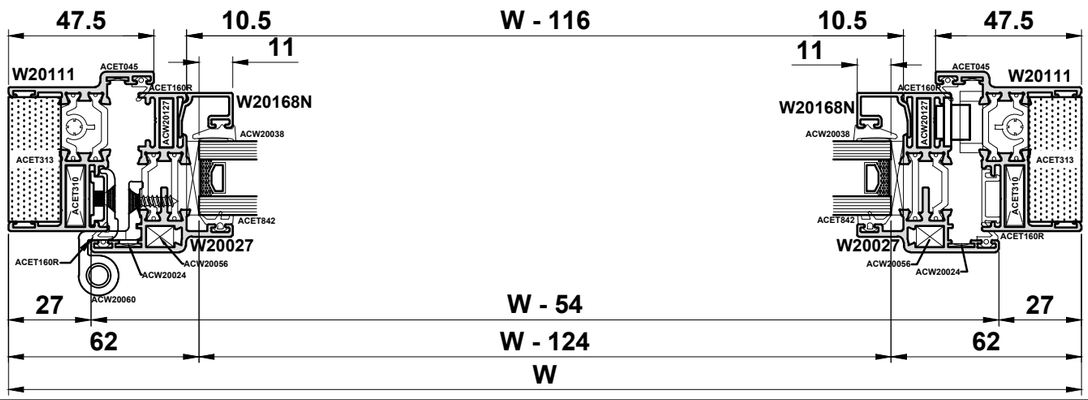


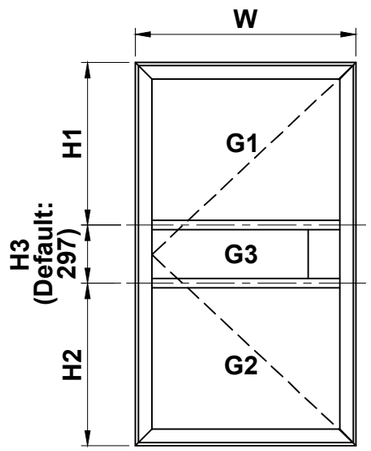


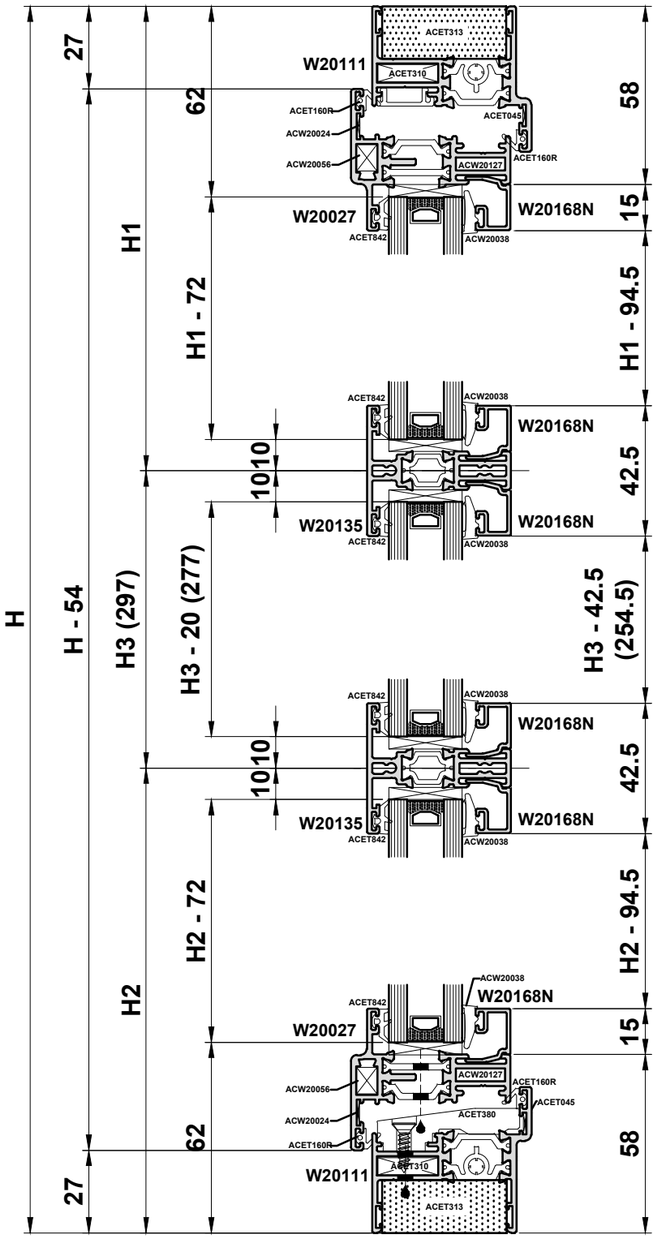


Do Not Scale From This Drawing

# Cutting Information - Open Out Single Door

**Profiles**

| | | | |
|---|---|---|---|
| W20015 | 2 | | H |
| W20015 | 2 | | W |
| W20027 | 2 | | W - 25 |
| W20027 | 2 | | DH - 21 |
| W20135 | 2 | | W - 87 |
| W20168N | 4 | | W - 87 |
| W20168N | 2 | | W - 152.5 |
| W20168N | 2 | | H1 - 80 |
| W20168N | 2 | | H2 - 80 |
| W20168N | 2 | | H3 - 43 |
| W20039 | 1 | | W - 36 |
| ETC364 | 2 | | W - 36 |
| ETC364 | 2 | | H4 - 43 |
| ACW20138 | 1 | | 285 |
| PCX41 | 2 | | W - 36 |
| PCX41 | 2 | | DH - 26.5 |

**Accessories**

ACCY4525NKTTS3

| | | | | | |
|---|---|---|---|---|---|
| ACCY4525NKTTS3 | Cylinder | 1 | ACW20065 | Multi-Point Lock | 1 |
| ACET045 | S/S Chevron | 4 | ACW20066L/R | Centre Keep | 1 |
| ACET066 | Transom/Mullion Screw | 14 | ACW20067 | Roller Keeps | 4 |
| ACET067 | S/S CSK S/T Screw | 15 | ACW20127 | Vent Frame Cleats | 4 |
| ACET160R | Outer Frame Seal | 2(W-60) + 2(H-60) | ACW20160 | Outerframe Screw | 4 |
| ACET160R | Vent Frame Seal | 2(W-25) + 2(H-25) | ACET845 | Low Line Gasket | 2W + 2H4 |
| ACET310 | Outer Frame Cleats | 4 | | | |
| ACET380 | Run Up Block | 1 | | | |
| ACET390 | Polyamide Screw | 8 | | | |
| ACET842 | E Gasket | 6(W-95) + 2(H-95) | | | |
| ACGSL045 | Drainage Cap | 2 | | | |
| ACSM001N | Door Handle | 1 Pair | | | |
| ACW20024 | S/S Chevron | 4 | | | |
| ACW20038 | Wedge Gasket | 6(W-95) + 2(H-95) | | | |
| ACW20056 | Vent Frame Cleats | 4 | | | |
| ACW20060 | Butt Hinge | 4 | | | |

**Glass**

| | | |
|---|---|---|
| G1 | 1 x | W - 95 x H1 - 53.5 |
| G2 | 1 x | W - 95 x H2 - 57.5 |
| G3 | 1 x | W - 160.5 x H3 - 20 |
| G4 | 1 x | W - 44 x H4 - 40 |

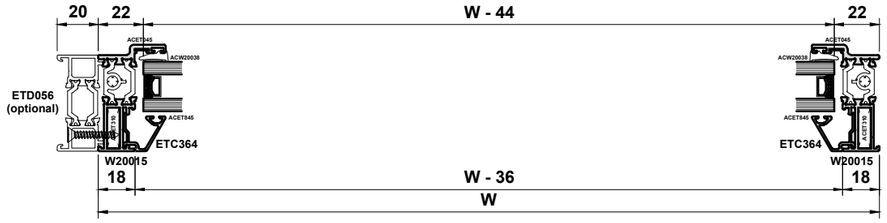


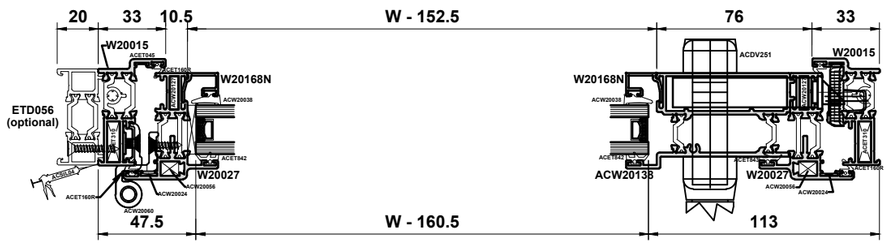


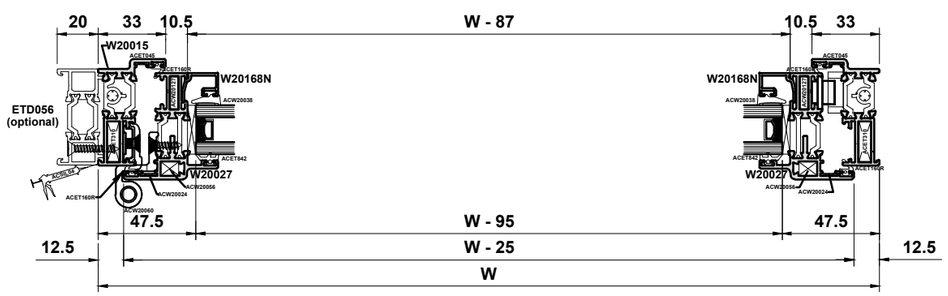


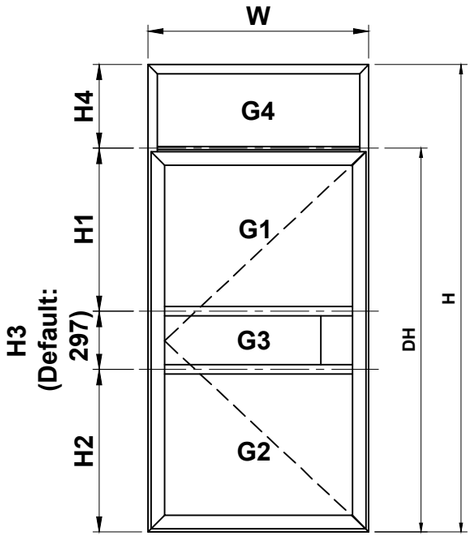


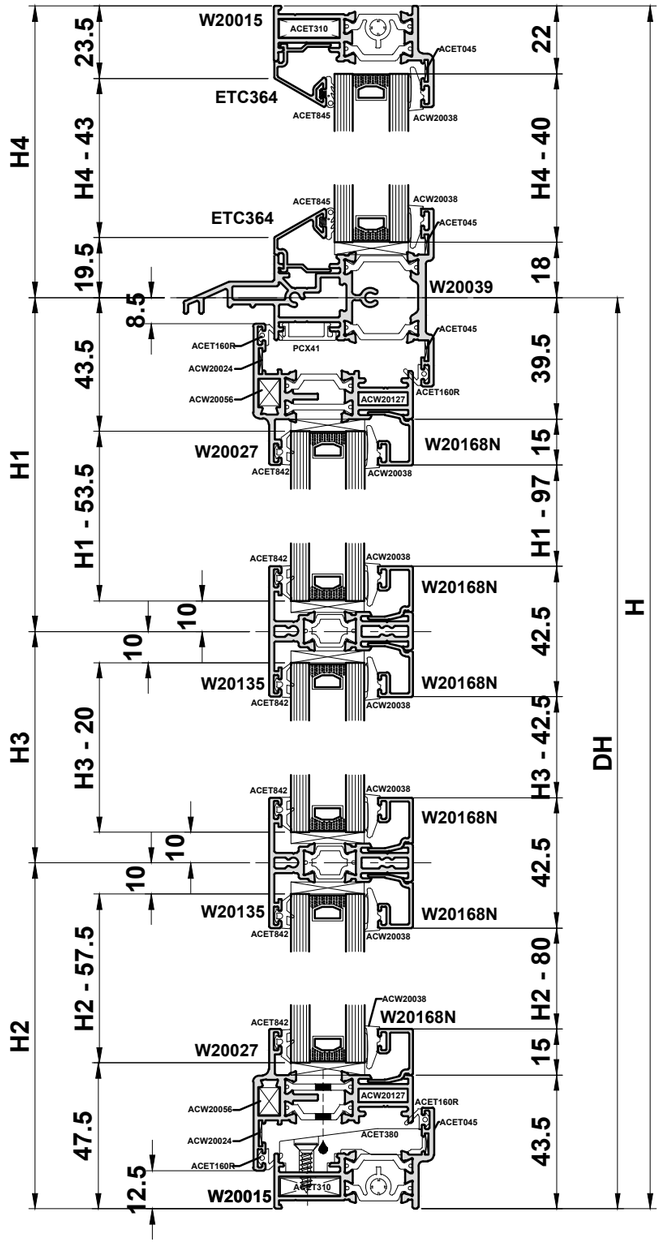


**Do Not Scale From This Drawing**

# Cutting Information - Open Out Double Door

**Profiles**

| | | | |
|---|---|---|---|
| W20015 | 2 | | H |
| W20015 | 2 | | W |
| W20027 | 4 | | W/2 - 16 |
| W20027 | 4 | | H - 25 |
| W20135 | 4 | | W/2 - 78 |
| W20048 | 1 | | H - 54 |
| W20168N | 8 | | W/2 - 78 |
| W20168N | 4 | | W/2 - 152.5 |
| W20168N | 4 | | H1 - 80 |
| W20168N | 4 | | H2 - 80 |
| W20168N | 4 | | H3 - 43 |
| ACW20138 | 2 | | 285 |
| PCX41 | 2 | | H - 36 |
| PCX41 | 2 | | W - 36 |
| PCX49 | 1 | | H - 54 |

**Accessories**

| | | | | | |
|---|---|---|---|---|---|
| ACCY4525NKTTS3 | Cylinder | 1 | ACW20066L/R | Centre Keep | 1 |
| ACET045 | Chevrons | 4 | ACW20067 | Roller Keeps | 4 |
| ACET066 | Transom/Mullion Screw | 20 | ACVL432 | Shootbolt | 2 |
| ACET067 | S/S CSK S/T Screw | 15 | ACW20127 | Vent Frame Cleats | 8 |
| ACET160R | Outer Frame Seal | 2(W-60) + 4(H-60) | ACW20160 | Outer Frame Screw | 4 |
| ACET160R | Vent Frame Seal | 4(W/2-16) + 2(H-25) | ACW20432 | Shoot Bolt Keeps | 2 |
| ACET310 | Outer Frame Cleats | 4 | ACET843 | Seal | H3 x 2 |
| ACET380 | Run up Block | 2 | | | |
| ACET390 | Polyamide Screw | 8 | | | |
| ACET842 | E Gasket | 6(W/2-85) + 4(H-95) | | | |
| ACGSL045 | Drainage Caps | 2 | | | |
| ACSM001N | Door Handle | 1 Pair | | | |
| ACSM025L/R | Dummy Door Handle | 1 Pair | | | |
| ACW20024 | Chevrons | 8 | | | |
| ACW20038 | Wedge Gasket | 6(W/2-85) + 4(H-95) | | | |
| ACW20048 | W20048 End Cap | 1 Pair | | | |
| ACW20056 | Vent Frame Cleats | 8 | | | |
| ACW20060 | Butt-Hinge | 8 | | | |
| ACW20065 | Multi-Point Lock | 1 | | | |

**Glass**

| | | |
|---|---|---|
| G1 | 2 x | W/2 - 86 x H1 - 57.5 |
| G2 | 2 x | W/2 - 86 x H2 - 57.5 |
| G3 | 2 x | W/2 - 151.5 x H3 - 20 |

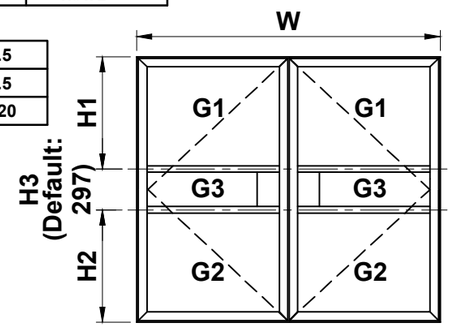


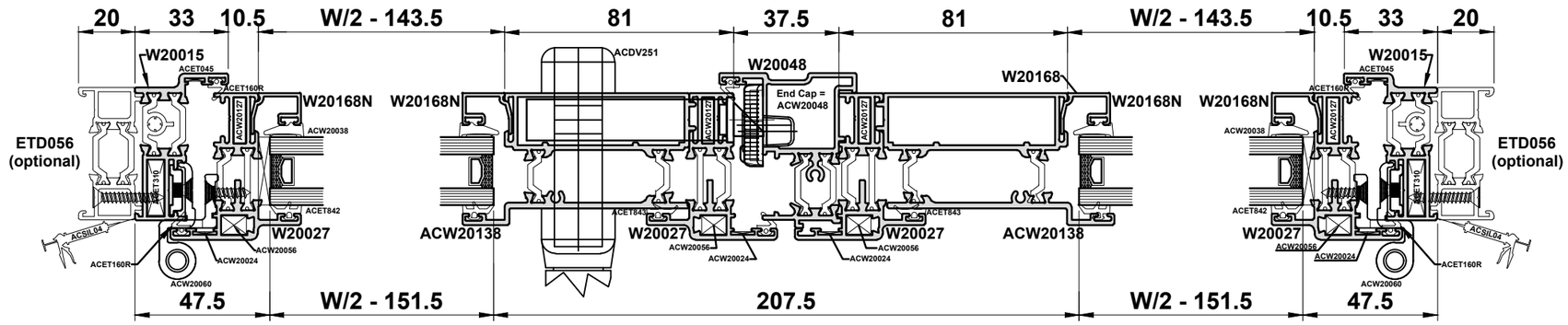


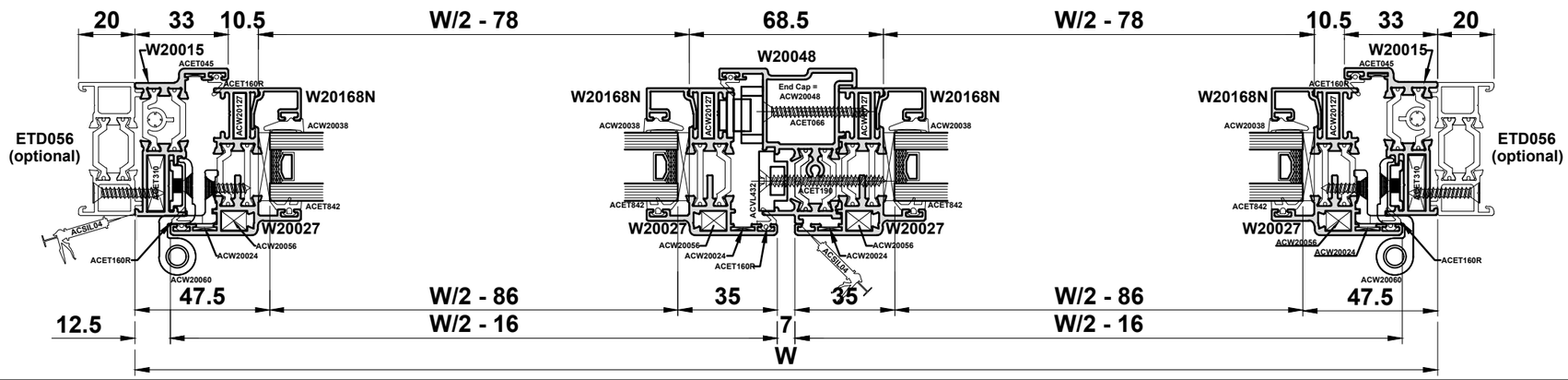


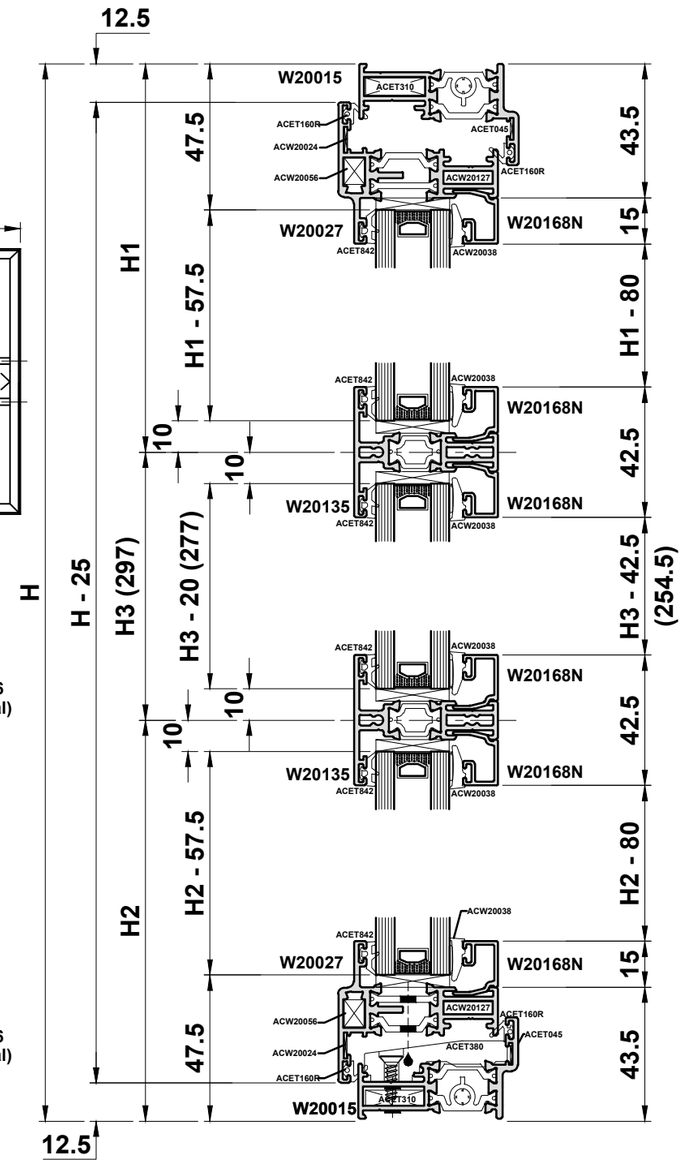


**Do Not Scale From This Drawing**

# Cutting Information - Open Out Double Door

**Profiles**

| | | |
|---|---|---|
| W20111 | 2 | H |
| W20111 | 2 | W |
| W20027 | 4 | W/2 - 30.5 |
| W20027 | 4 | H - 54 |
| W20135 | 4 | W/2 - 92.5 |
| W20048 | 1 | H - 83 |
| W20168N | 8 | W/2 - 92.5 |
| W20168N | 4 | W/2 - 158 |
| W20168N | 4 | H1 - 94.5 |
| W20168N | 4 | H2 - 94.5 |
| W20168N | 4 | H3 - 42.5 |
| ACW20138 | 2 | 285 |
| PCX41 | 2 | W - 54 |
| PCX41 | 2 | H - 54 |
| PCX49 | 1 | H - 83 |

**Accessories**

| | | | | | |
|---|---|---|---|---|---|
| ACCY4525NKTTS3 | Cylinder | 1 | ACW20066L/R | Centre Keep | 1 |
| ACET045 | Chevrons | 4 | ACW20067 | Roller Keeps | 4 |
| ACET066 | Transom/Mullion Screw | 20 | ACVL432 | Shootbolt | 2 |
| ACET067 | S/S CSK S/T Screw | 15 | ACW20127 | Vent Frame Cleats | 8 |
| ACET160R | Outer Frame Seal | 2(W-60) + 4(H-60) | ACW20160 | Outer Frame Screw | 4 |
| ACET160R | Vent Frame Seal | 4(W/2-16) + 2(H-25) | ACW20432 | Shoot Bolt Keeps | 2 |
| ACET310 | Outer Frame Cleats | 4 | ACET313 | Outerframe Foam | 2H + 2W |
| ACET380 | Run up Block | 2 | ACET843 | Seal | H3 x 2 |
| ACET390 | Polyamide Screw | 8 | | | |
| ACET842 | E Gasket | 6(W/2-85) + 4(H-95) | | | |
| ACGSL045 | Drainage Caps | 2 | | | |
| ACSM001N | Door Handle | 1 Pair | | | |
| ACSM025L/R | Dummy Door Handle | 1 Pair | | | |
| ACW20024 | Chevrons | 8 | | | |
| ACW20038 | Wedge Gasket | 6(W/2-85) + 4(H-95) | | | |
| ACW20048 | W20048 End Cap | 1 Pair | | | |
| ACW20056 | Vent Frame Cleats | 8 | | | |
| ACW20060 | Hinge | 8 | | | |
| ACW20065 | Multi-Point Lock | 1 | | | |

**Glass**

| | | |
|---|---|---|
| G1 | 2 x | W/2 - 100.5 x H1 - 72 |
| G2 | 2 x | W/2 - 100.5 x H2 - 72 |
| G3 | 2 x | W/2 - 166 x H3 - 20 |

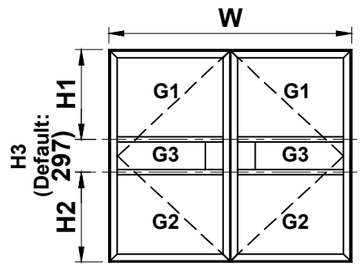


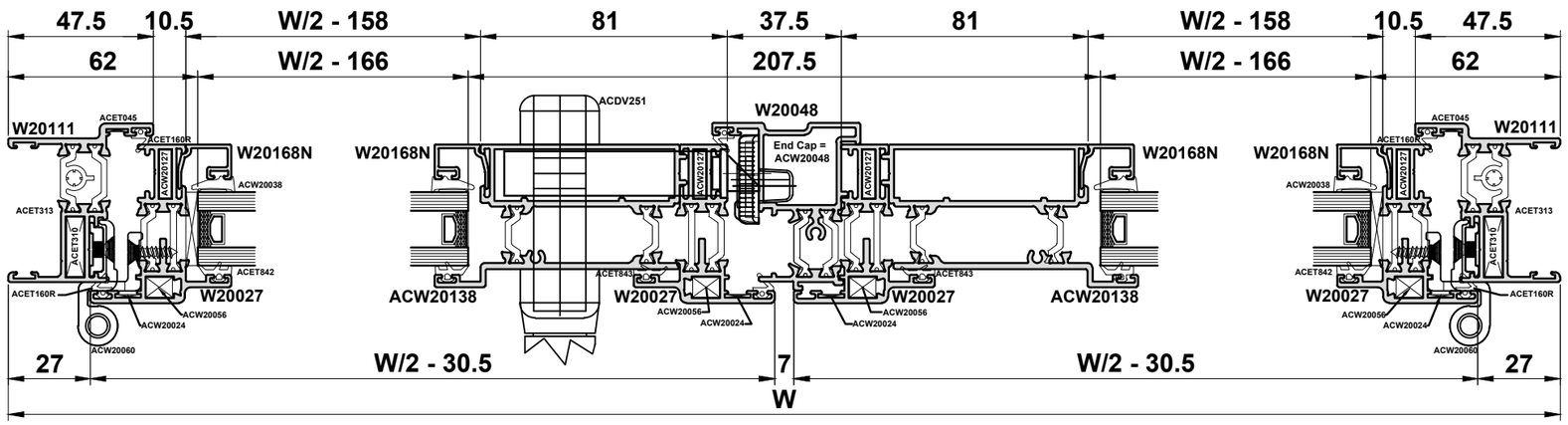


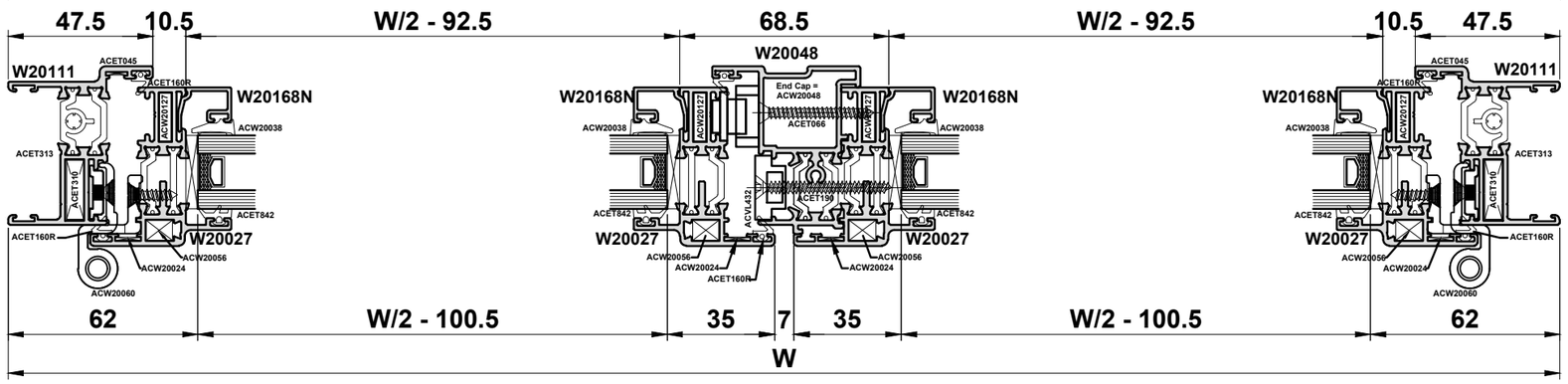


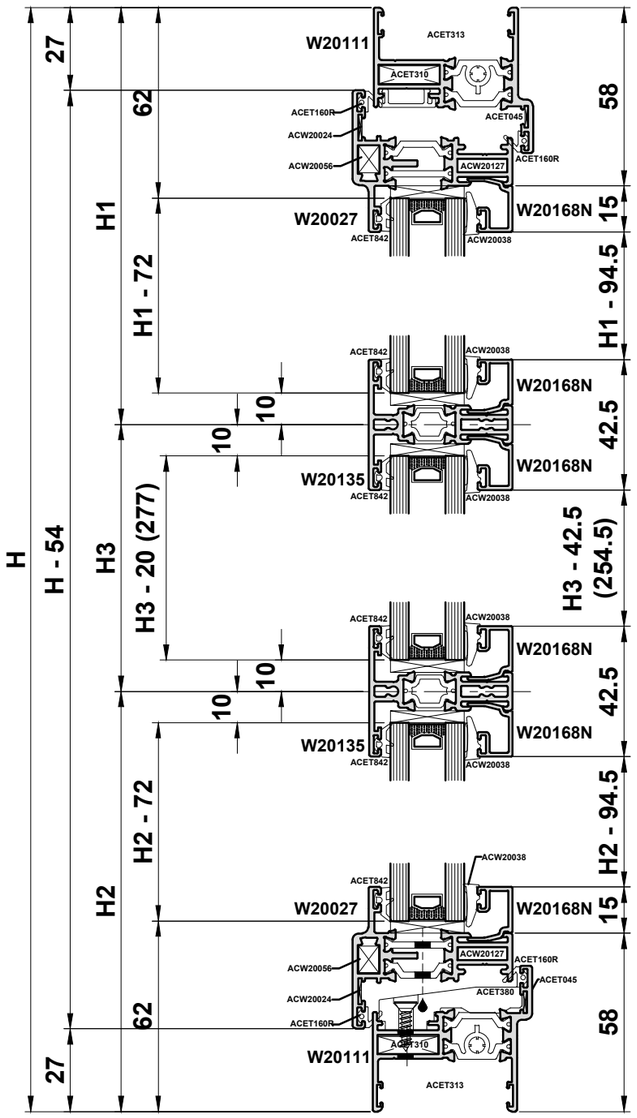


Do Not Scale From This Drawing

# Cutting Information - Open In Single Door

**Profiles**

| | | | |
|---|---|---|---|
| W20015 | 2 | | H |
| W20015 | 2 | | W |
| W20125N | 2 | | W - 25 |
| W20125N | 2 | | H - 25 |
| W20135 | 2 | | W - 90 |
| W20168N | 4 | | W - 90 |
| W20168N | 2 | | W - 155.5 |
| W20168N | 2 | | H1 - 80 |
| W20168N | 2 | | H2 - 80 |
| W20168N | 2 | | H3 - 42.5 |
| W20175 | 1 | | W - 36 |
| ACW20138 | 1 | | 285 |
| PCX41 | 2 | | H - 36 |
| PCX41 | 2 | | W - 36 |

**Accessories**

| | | | | | |
|---|---|---|---|---|---|
| ACEC025 | Chevrons | 2 | ACW20166L/R | Centre Keep | 1 |
| ACET045 | Chevrons | 2 | ACET067 | S/S CSK S/T Screw | 15 |
| ACET066 | Transom/Mullion Screw | 6 | ACET390 | Polyamide Screw | 8 |
| ACET160R | Vent Frame Seal | 2(W-25) + 2(H-25) | ACCY4525NKTTS3 | Cylinder | 1 |
| ACET310 | Outer Frame Cleats | 4 | ACSM001N | Door Handle | 1 Pair |
| ACET380 | Run Up Block | 2 | ACET843 | Seal | H3 |
| ACET842 | E Gasket | 6(W-95) + 2(H-95) | | | |
| ACGSL045 | Drainage Cap | 2 | | | |
| ACVS033 | Outer Frame Seal | 2(W-60) + 2(H-60) | | | |
| ACW20024 | Chevrons | 4 | | | |
| ACW20038 | Wedge Gasket | 6(W-95) + 2(H-95) | | | |
| ACW20164 | Hinges | 4 | | | |
| ACW20065 | Multi-Point Lock | 1 | | | |
| ACW20067 | Roller Keeps | 4 | | | |
| ACW20125 | Vent Frame Cleats | 4 | | | |
| ACW20126 | Vent Frame Cleats | 4 | | | |
| ACW20160 | Outer Frame Screw | 4 | | | |

**Glass**

| | | |
|---|---|---|
| G1 | 1 x | W - 98 x H1 - 59 |
| G2 | 1 x | W - 98 x H2 - 59 |
| G3 | 1 x | W - 163.5 x H3 - 20 |

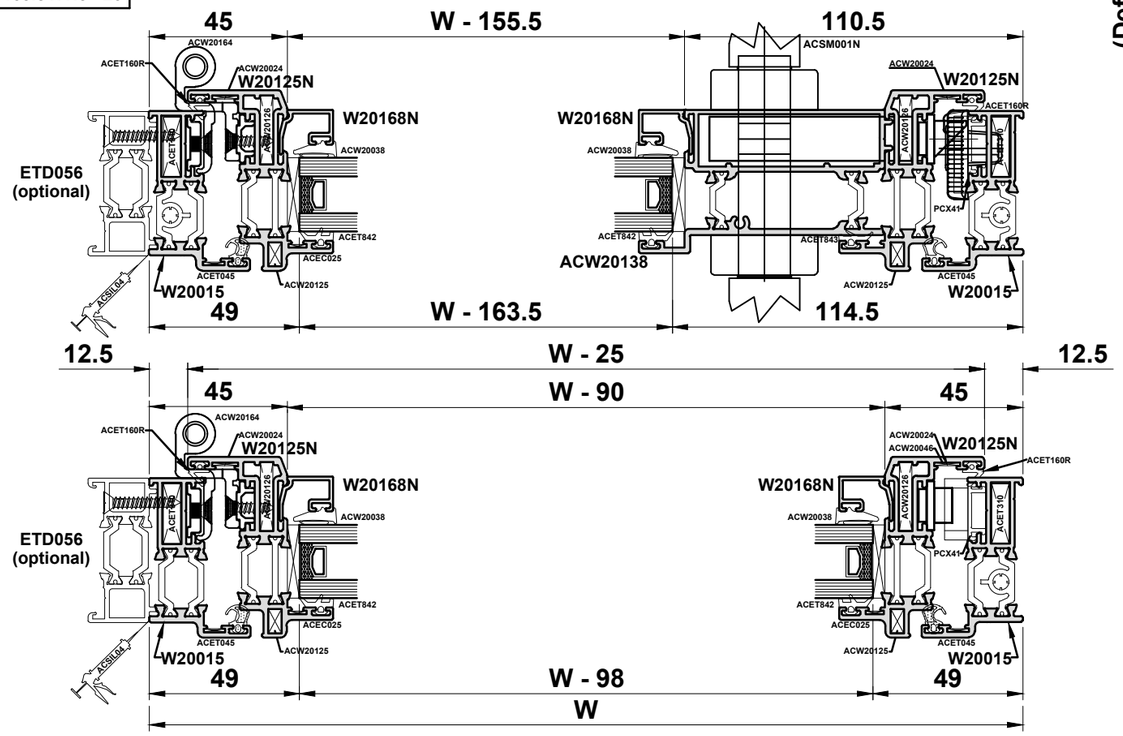


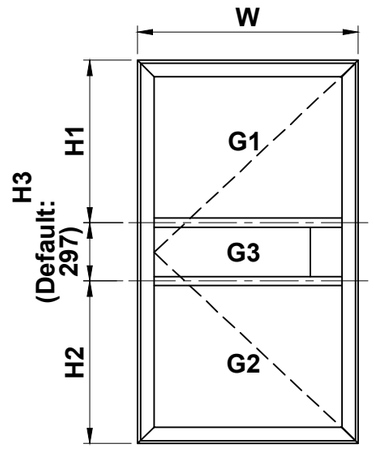


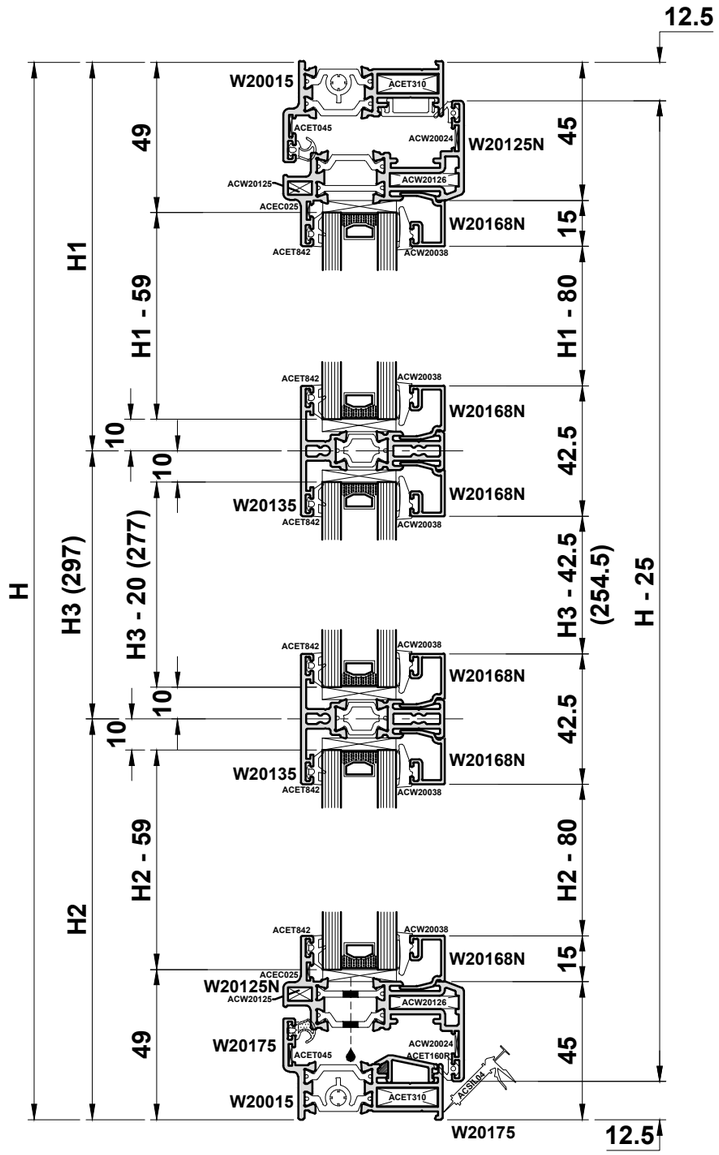


**Do Not Scale From This Drawing**

# Cutting Information - Open In Single Door

**Profiles**

| | | | |
|---|---|---|---|
| W20111 | 2 | | H |
| W20111 | 2 | | W |
| W20125N | 2 | | W - 54 |
| W20125N | 2 | | H - 54 |
| W20135 | 2 | | W - 119 |
| W20168N | 4 | | W - 119 |
| W20168N | 2 | | W - 184.5 |
| W20168N | 2 | | H1 - 96 |
| W20168N | 2 | | H2 - 96 |
| W20168N | 2 | | H3 - 42.5 |
| W20175 | 1 | | W - 59 |
| ACW20138 | 1 | | 285 |
| PCX41 | 2 | | W - 54 |
| PCX41 | 2 | | H - 54 |

**Glass**

| | | |
|---|---|---|
| G1 | 1 x | W - 127 x H1 - 72 |
| G2 | 1 x | W - 127 x H2 - 72 |
| G3 | 1 x | W - 190 x H3 - 20 |

**Accessories**

| | | | | | |
|---|---|---|---|---|---|
| ACEC025 | Chevrons | 2 | ACW20166L/R | Centre Keep | 1 |
| ACET045 | Chevrons | 2 | ACET067 | S/S CSK S/T Screw | 15 |
| ACET066 | Transom/Mullion Screw | 6 | ACET390 | Polyamide Screw | 8 |
| ACET160R | Vent Frame Seal | 2(W-25) + 2(H-25) | ACCY4525NKTTS3 | Cylinder | 1 |
| ACET310 | Outer Frame Cleats | 4 | ACSM001N | Door Handle | 1 Pair |
| ACET380 | Run Up Block | 2 | ACET313 | Outerframe Foam | 2H + 2W |
| ACET842 | E Gasket | 6(W-95) + 2(H-95) | ACET843 | Seal | H3 |
| ACGSL045 | Drainage Cap | 2 | | | |
| ACVS033 | Outer Frame Seal | 2(W-60) + 2(H-60) | | | |
| ACW20024 | Chevrons | 4 | | | |
| ACW20038 | Wedge Gasket | 6(W-95) + 2(H-95) | | | |
| ACW20056 | Vent Frame Cleats | 4 | | | |
| ACW20164 | Hinges | 4 | | | |
| ACW20065 | Multi-Point Lock | 1 | | | |
| ACW20067 | Roller Keeps | 4 | | | |
| ACW20125 | Vent Frame Cleats | 4 | | | |
| ACW20126 | Vent Frame Cleats | 8 | | | |
| ACW20160 | Outer Frame Screw | 4 | | | |

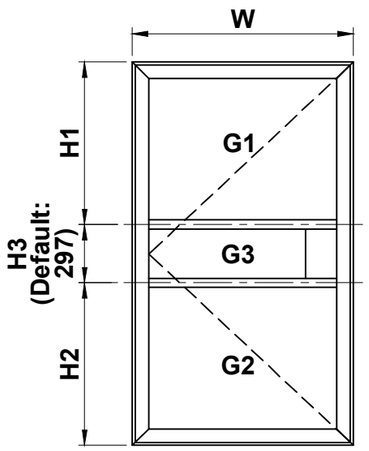


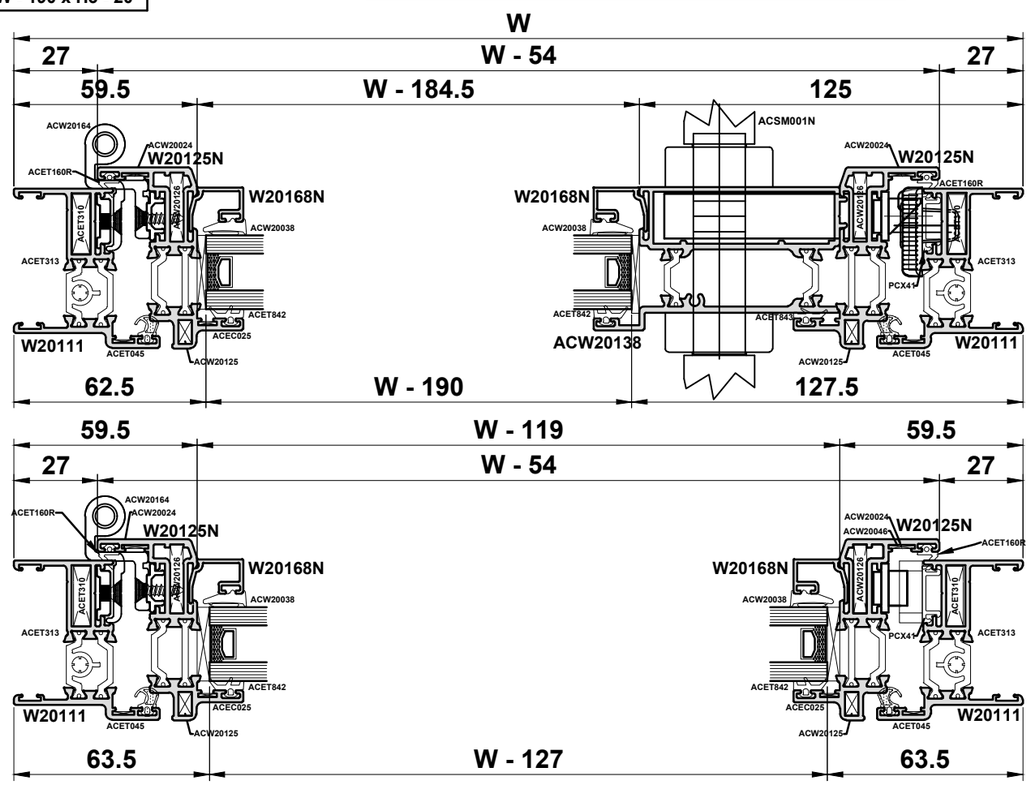


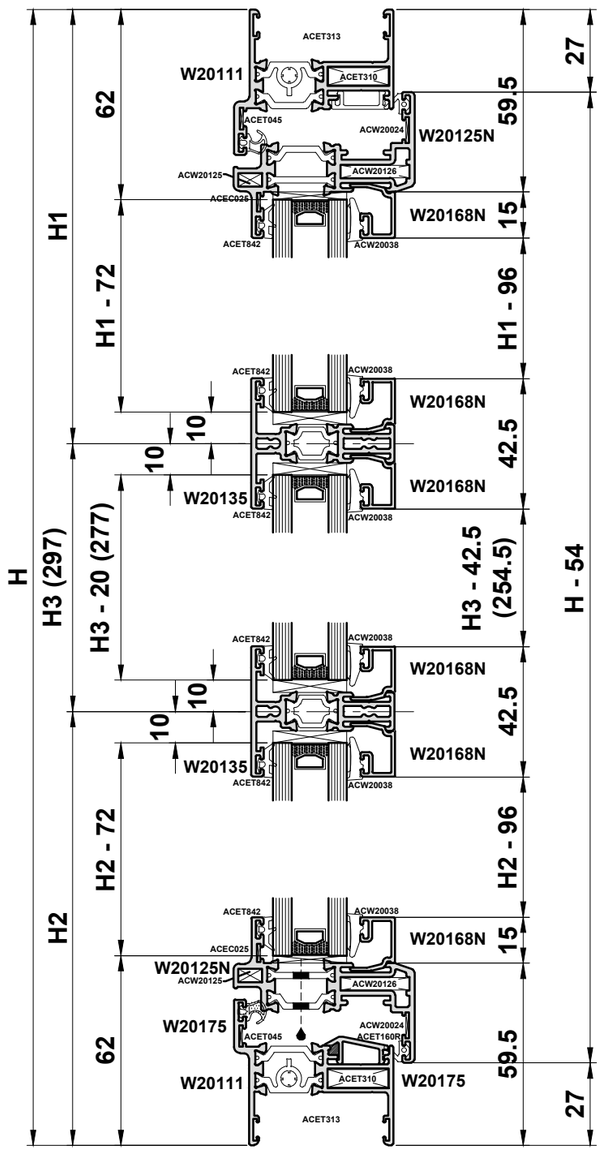


**Do Not Scale From This Drawing**

# Cutting Information - Open In Double Door

**Profiles**

| | | | |
|---|---|---|---|
| W20015 | 2 | | H |
| W20015 | 2 | | W |
| W20125N | 4 | | W/2 - 16.5 |
| W20125N | 4 | | H - 25 |
| W20135 | 4 | | W/2 - 81.5 |
| W20148 | 1 | | H - 63 |
| W20168N | 8 | | W/2 - 81.5 |
| W20168N | 4 | | W/2 - 147 |
| W20168N | 4 | | H1 - 80 |
| W20168N | 4 | | H2 - 80 |
| W20168N | 4 | | H3 - 42.5 |
| W20175 | 1 | | W - 36 |
| ACW20138 | 2 | | 285 |
| PCX41 | 2 | | H - 36 |
| PCX41 | 1 | | H - 63 |
| PCX41 | 2 | | W - 36 |
| PCX50 | 1 | | H - 63 |

**Accessories**

| | | | | | |
|---|---|---|---|---|---|
| ACET045 | Chevrons | 6 | ACW20432 | Shoot Bolt Keeps | 2 |
| ACET045 | Chevrons | 6 | ACET067 | S/S CSK S/T Screw | 15 |
| ACET066 | Transom/Mullion Screw | 20 | ACET390 | Polyamide Screw | 8 |
| ACET160R | Vent Frame Seal | 4(W/2-16) + 3(H-25) | ACCY4525NKTTS3 | Cylinder | 1 |
| ACET310 | Outer Frame Cleats | 4 | ACSM001N | Door Handle | 1 Pair |
| ACET380 | Run-Up Block | 4 | ACSM025L/R | Dummy Door Handle | 1 Pair |
| ACET842 | E Gasket | 12(W/2-85) + 4(H-95) | ACET843 | Seal | H3 x 2 |
| ACGSL045 | Drainage Caps | 4 | | | |
| ACVL432 | Shootbolt | 2 | | | |
| ACVS033 | Outer Frame Seal | 2(W-60) + 3(H-60) | | | |
| ACW20024 | Chevrons | 8 | | | |
| ACW20038 | Wedge Gasket | 12(W/2-85) + 4(H-95) | | | |
| ACW20164 | Hinges | 8 | | | |
| ACW20065 | Multi-Point Lock | 1 | | | |
| ACW20067 | Roller Keeps | 4 | | | |
| ACW20125 | Vent Frame Cleats | 8 | | | |
| ACW20126 | Vent Frame Cleats | 8 | | | |
| ACW20148 | W20148 End Cap | 1 Pair | | | |
| ACW20160 | Outer Frame Screw | 4 | | | |
| ACW20166L/R | Centre Keep | 1 | | | |

**Glass**

| | | |
|---|---|---|
| G1 | 2 x | W/2 - 89.5 x H1 - 59 |
| G2 | 2 x | W/2 - 89.5 x H2 - 59 |
| G3 | 2 x | W/2 - 154 x H3 - 20 |

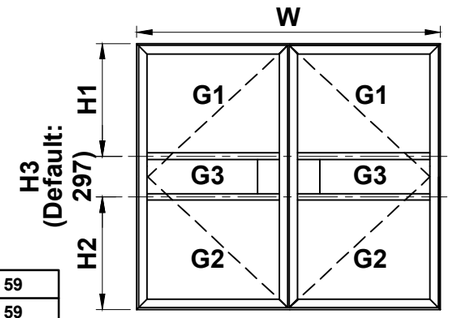





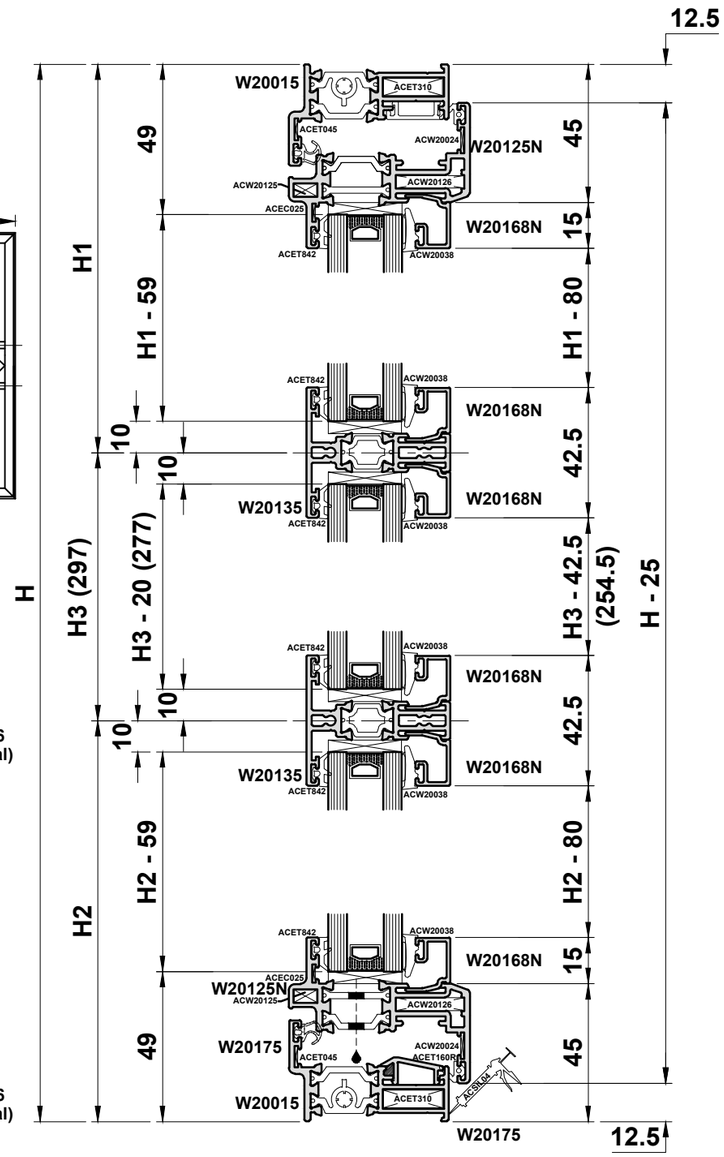


**Do Not Scale From This Drawing**

# Cutting Information - Open In Double Door

## Profiles

| | | | |
|---|---|---|---|
| W20111 | 2 | | H |
| W20111 | 2 | | W |
| W20125N | 4 | | W/2 - 31 |
| W20125N | 4 | | H - 54 |
| W20135 | 4 | | W/2 - 96 |
| W20148 | 1 | | H - 83 |
| W20168N | 8 | | W/2 - 96 |
| W20168N | 4 | | W/2 - 161.5 |
| W20168N | 4 | | H1 - 96 |
| W20168N | 4 | | H2 - 96 |
| W20168N | 4 | | H3 - 42.5 |
| W20175 | 1 | | W - 59 |
| ACW20138 | 2 | | 285 |
| PCX41 | 2 | | H - 54 |
| PCX41 | 1 | | H - 83 |
| PCX41 | 2 | | W - 54 |
| PCX50 | 1 | | H - 83 |

## Accessories

| | | | | | |
|---|---|---|---|---|---|
| ACET045 | Chevrons | 6 | ACW20432 | Shoot Bolt Keeps | 2 |
| ACET045 | Chevrons | 6 | ACET067 | S/S CSK S/T Screw | 15 |
| ACET066 | Transom/Mullion Screw | 20 | ACET390 | Polyamide Screw | 8 |
| ACET160R | Vent Frame Seal | 4(W/2-16) + 3(H-25) | ACCY4525NKTTS3 | Cylinder | 1 |
| ACET310 | Outer Frame Cleats | 4 | ACSM001N | Door Handle | 1 Pair |
| ACET380 | Run-Up Block | 4 | ACSM025L/R | Door Dummy Handle | 1 Pair |
| ACET842 | E Gasket | 12(W/2-85) + 4(H-95) | ACET313 | Outerframe Foam | 2H + 2W |
| ACGSL045 | Drainage Caps | 4 | ACET843 | Seal | H3 x 2 |
| ACVL432 | Shootbolt | 2 | | | |
| ACVS033 | Outer Frame Seal | 2(W-60) + 3(H-60) | | | |
| ACW20024 | Chevrons | 8 | | | |
| ACW20038 | Wedge Gasket | 12(W/2-85) + 4(H-95) | | | |
| ACW20164 | Hinges | 8 | | | |
| ACW20065 | Multi-Point Lock | 1 | | | |
| ACW20067 | Roller Keeps | 4 | | | |
| ACW20125 | Vent Frame Cleats | 8 | | | |
| ACW20126 | Vent Frame Cleats | 4 | | | |
| ACW20148 | W20148 End Cap | 1 Pair | | | |
| ACW20160 | Outer Frame Screw | 4 | | | |
| ACW20166L/R | Centre Keep | 1 | | | |

## Glass

| | | |
|---|---|---|
| G1 | 2 x | W/2 - 104 x H1 - 73.5 |
| G2 | 2 x | W/2 - 104 x H2 - 73.5 |
| G3 | 2 x | W/2 - 168.5 x H3 - 20 |

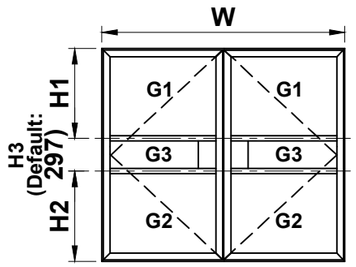


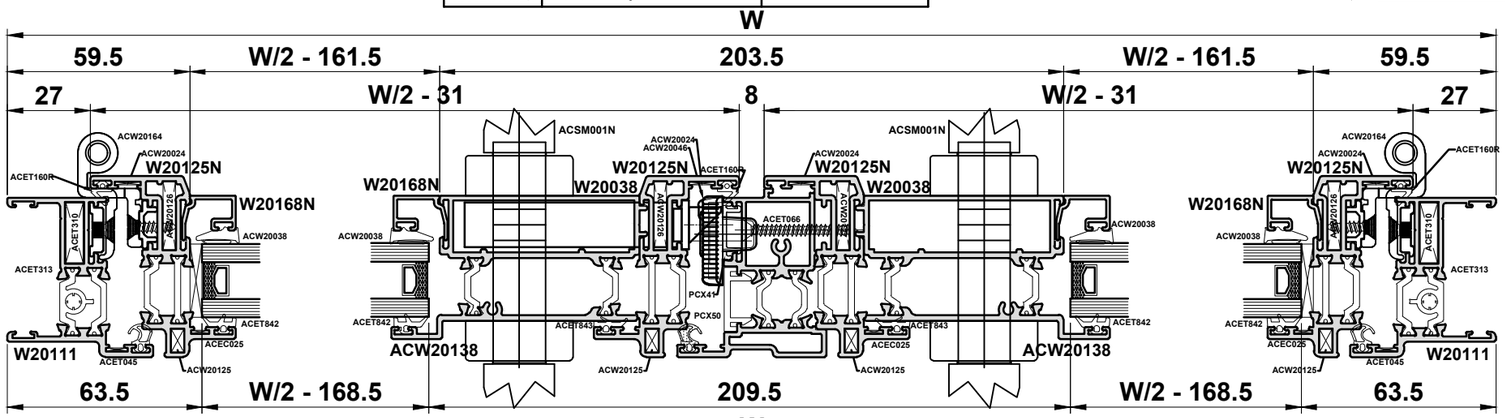


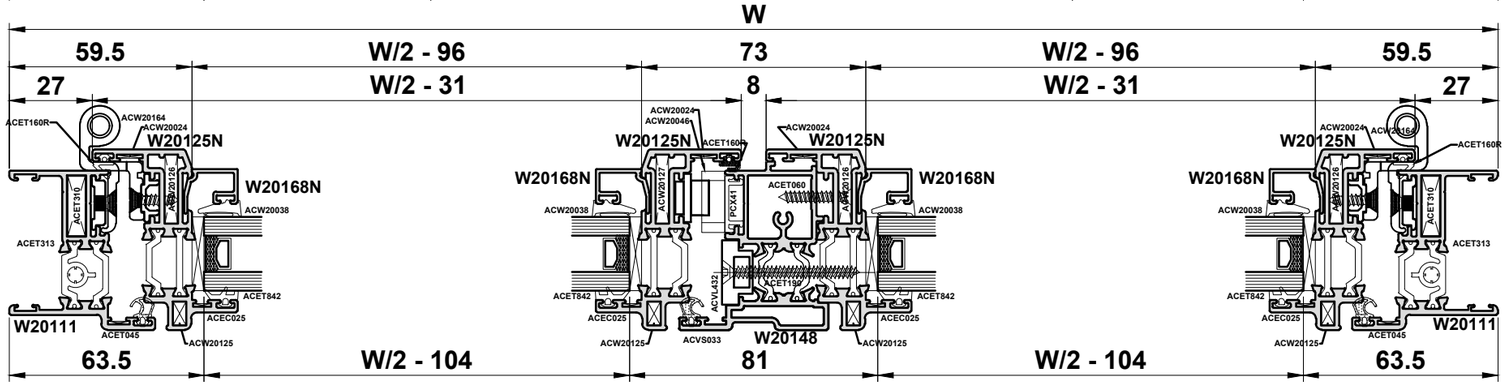


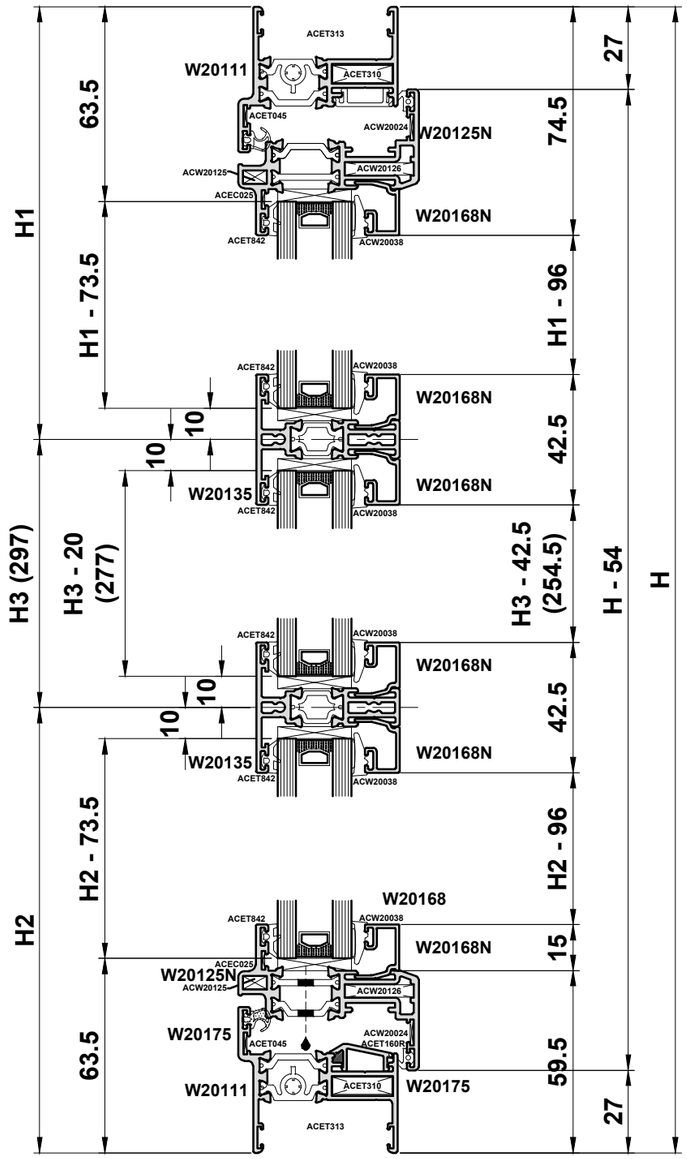


Do Not Scale From This Drawing

# Cutting Information - PAS24 Open Out Single Door

| Profile Cutting Schedule | | |
|---|---|---|
| W20015 | 2 | H |
| W20015 | 2 | W |
| W20124 | 2 | H - 25 |
| W20124 | 2 | W - 25 |
| W20135 | 2 | W - 105 |
| W20168N | 2 | W - 170.5 |
| W20168N | 4 | W - 105 |
| W20168N | 2 | H1 - 88.5 |
| W20168N | 2 | H2 - 88.5 |
| W20168N | 2 | H3 - 42 |
| ACW20140 | 1 | 285 |
| PCX15 | 2 | H - 60 |
| PCX15 | 2 | W - 60 |
| PCX41 | 2 | H - 36 |
| PCX41 | 2 | W - 36 |

| Accessories | | |
|---|---|---|
| ACCY4525NKTTS3 | Cylinder | 1 |
| ACDV737 | Shootbolt | 1 |
| ACDV738 | Shootbolt | 1 |
| ACET044 | Sash S/S Chevron | 4 |
| ACET045 | Outer S/S Chevron | 4 |
| ACET060 | Screw | 2 |
| ACET066 | Screw | 8 |
| ACET123 | Screw | 44 |
| ACET160R | Outer Gasket | 2(W - 58) |
| ACET160R | Outer Gasket | 2(H - 58) |
| ACET160R | Sash Gasket | 2(W - 33) |
| ACET160R | Sash Gasket | 2(H - 33) |
| ACET269 | Single Keep | Pair |
| ACET310 | Outer Frame Cleats | 4 |

| | | |
|---|---|---|
| ACET380 | Run Up Block | 2 |
| ACSM001N | Lever Handle | Pair |
| ACET842 | E Gasket | 6(W - 127) |
| ACET842 | E Gasket | 2(H - 127) |
| ACGSL045 | Drainage Cap | 2 |
| ACUN3532 | M4 Threaded Insert | 32 |
| ACUN3537 | Screw | 24 |
| ACW20024 | Sash S/S Chevron | 4 |
| ACW20038 | Wedge Gasket | 6(W - 127) |
| ACW20038 | Wedge Gasket | 2(H - 127) |
| ACW20066 | Lock Keep | 1 |
| ACW20121 | Sash Cleats | 4 |
| ACW20127 | Sash Cleats | 4 |
| ACW20160 | Outer Frame Screw | 4 |
| ACW20360 | Hinge Kit | 4 |

| | | |
|---|---|---|
| ACW20367 | PAS24 Roller Keep | 4 |
| ACW20375 | Hinge Protector | 4 |
| ACW20382 | M4 Fixing Plate | 36 |
| ACW20465 | Primary Lock | 1 |

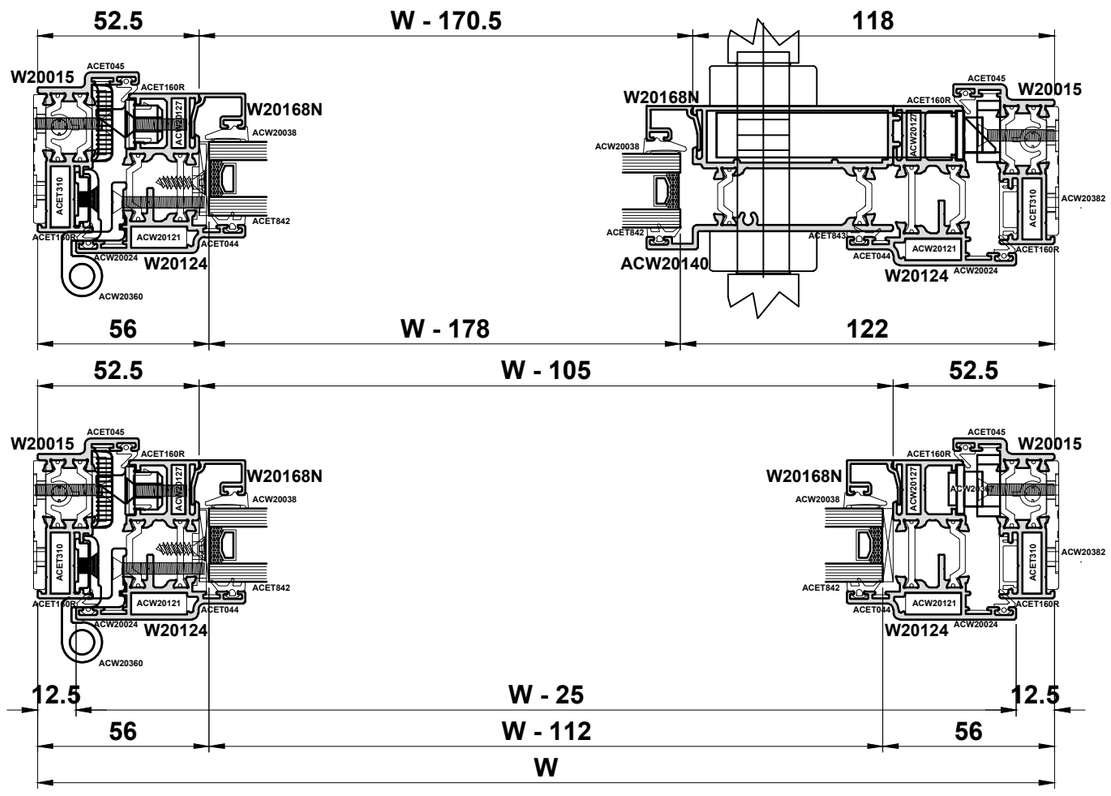


| Glass | |
|---|---|
| G1 | W - 112 X H1 - 65.5 |
| G2 | W - 112 X H2 - 65.5 |
| G3 | W - 178 X H3 - 20 |

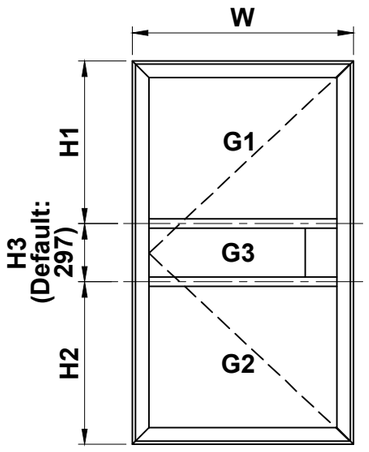


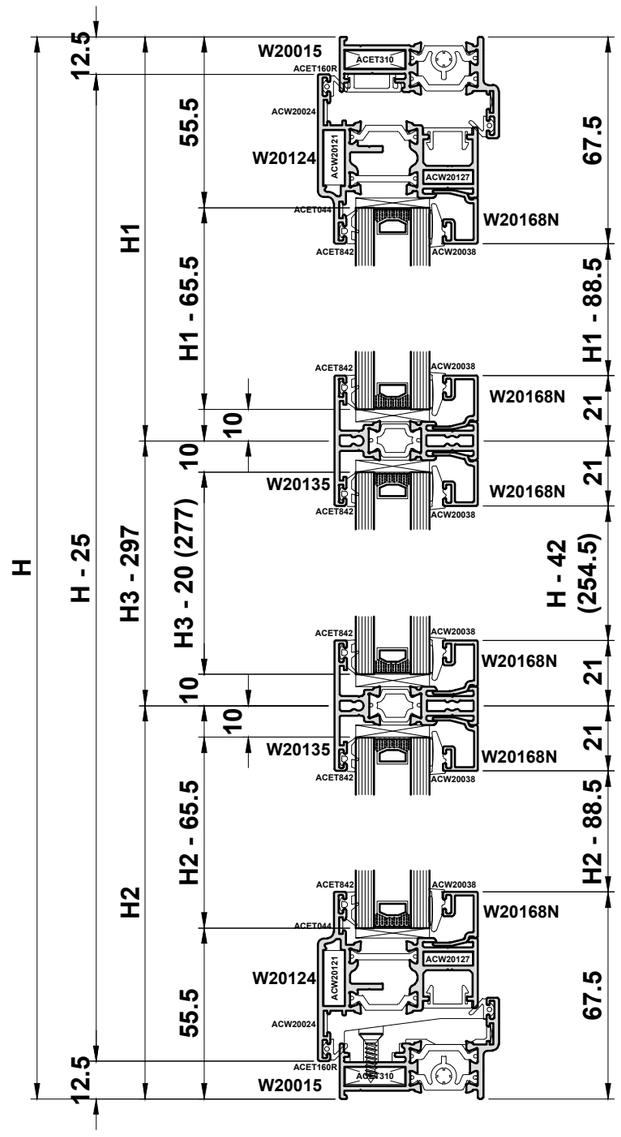


Do Not Scale From This Drawing

# Cutting Information - PAS24 Open Out Single Door

| Profile Cutting Schedule | | |
|---|---|---|
| W20015 | 2 | H |
| W20015 | 2 | W |
| W20124 | 2 | DH - 21 |
| W20124 | 2 | W - 25 |
| W20135 | 2 | W - 105 |
| W20168N | 2 | W - 170.5 |
| W20168N | 4 | W - 105 |
| W20168N | 2 | H1 - 85 |
| W20168N | 2 | H2 - 89 |
| W20168N | 2 | H3 - 42.5 |
| W20039 | 1 | W - 36 |
| ETC364 | 2 | H4 - 43 |
| ETC364 | 2 | W - 36 |
| ACW20140 | 1 | 285 |
| PCX15 | 2 | DH - 56 |
| PCX15 | 2 | W - 60 |
| PCX41 | 2 | DH - 32 |
| PCX41 | 2 | W - 36 |

| Accessories | | |
|---|---|---|
| ACCY4525NKTTS3 | Cylinder | 1 |
| ACDV737 | Shootbolt | 1 |
| ACDV738 | Shootbolt | 1 |
| ACET044 | Sash S/S Chevron | 4 |
| ACET045 | Outer S/S Chevron | 4 |
| ACET060 | Screw | 2 |
| ACET066 | Screw | 12 |
| ACET123 | Screw | 44 |
| ACET125 | Anti-Twist Clip | 2 |
| ACET160R | Outer Gasket | 2(DH - 54) |
| ACET160R | Outer Gasket | 2(DH - 54) |
| ACET160R | Sash Gasket | 2(DH - 29) |
| ACET160R | Sash Gasket | 2(W - 33) |
| ACET269 | Single Keep | Pair |
| ACET310 | Outer Frame Cleats | 4 |
| ACET380 | Run Up Block | 2 |
| ACSM001N | Lever Handle | Pair |

| | | |
|---|---|---|
| ACET842 / ACW20038 | E / Wedge Gasket | 2(H1 - 68) |
| ACET842 / ACW20038 | E / Wedge Gasket | 2(H2 - 81) |
| ACET842 / ACW20038 | E / Wedge Gasket | 2(H3 - 35) |
| ACET845 / ACW20038 | E / Wedge Gasket | 2(H4 - 53) |
| ACET842 / ACW20038 | E / Wedge Gasket | 4(W - 127) |
| ACET842 / ACW20038 | E / Wedge Gasket | 2(W - 192) |
| ACET845 / ACW20038 | E / Wedge Gasket | 2(W - 57) |
| ACGSL045 | Drainage Cap | 2 |
| ACUN3532 | M4 Threaded Insert | 32 |
| ACUN3537 | Screw | 24 |
| ACW20024 | Sash S/S Chevron | 4 |
| ACW20038 | Wedge Gasket | 6(W - 127) |
| ACW20038 | Wedge Gasket | 2(H - 127) |
| ACW20039 | W20039 End Caps | Pair |
| ACW20066 | Lock Keep | 1 |
| ACW20121 | Sash Cleats | 4 |
| ACW20127 | Sash Cleats | 4 |
| ACW20160 | Outer Frame Screw | 4 |
| ACW20360 | Hinge Kit | 4 |
| ACW20375 | Hinge Protector | 4 |
| ACW20382 | M4 Fixing Plate | 36 |
| ACW20465 | Primary Lock | 1 |

| | | |
|---|---|---|
| ACW20367 | PAS24 Roller Keep | 4 |

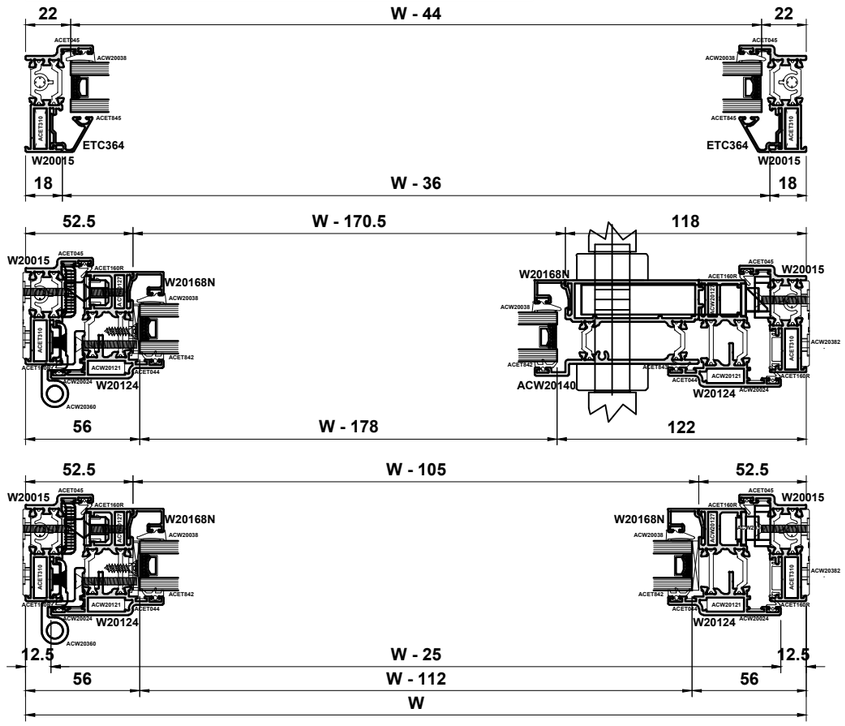


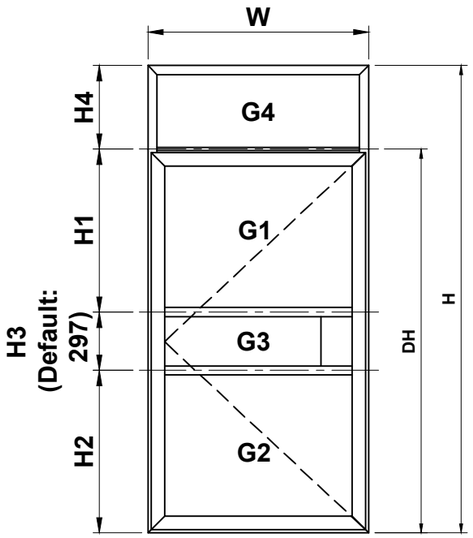


| Glass | |
|---|---|
| G1 | W - 112 X H1 - 62 |
| G2 | W - 112 X H2 - 65.5 |
| G3 | W - 178 X H3 - 20 |
| G4 | W - 44 X H4 - 40 |

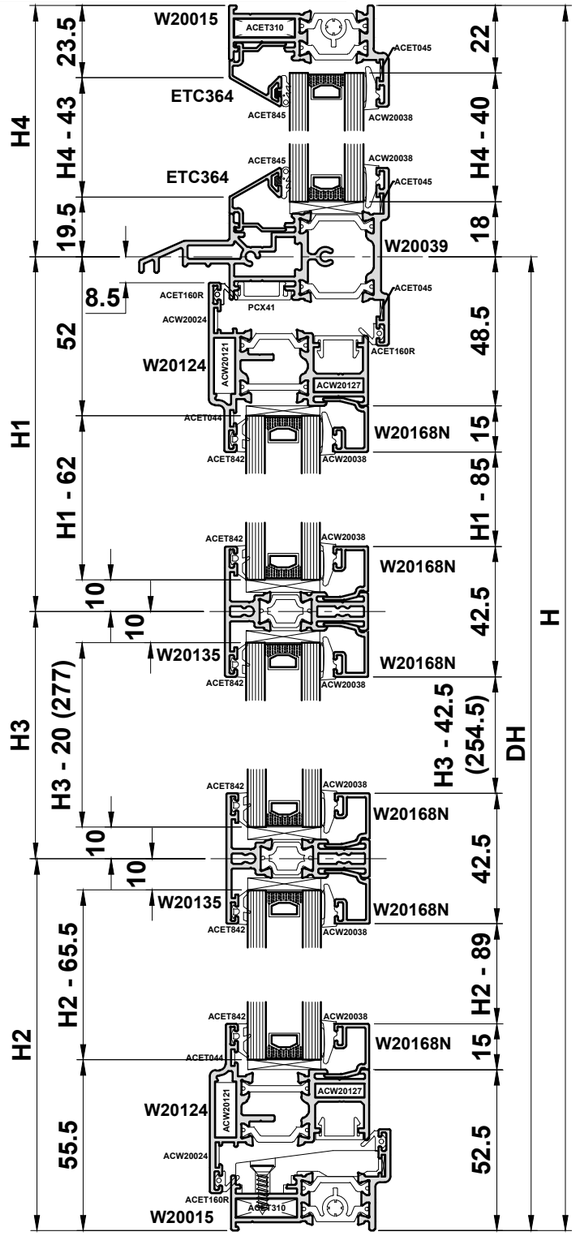


Do Not Scale From This Drawing

# Cutting Information - PAS24 Open Out Single Door Low Threshold

| Profile Cutting Schedule | | |
|---|---|---|
| W20015 | 2 | H - 15 |
| W20015 | 1 | W |
| W20124 | 2 | H - 32.5 |
| W20124 | 2 | W - 25 |
| W20135 | 2 | W - 105 |
| W20168N | 2 | W - 170.5 |
| W20168N | 4 | W - 105 |
| W20168N | 2 | H1 - 88.5 |
| W20168N | 2 | H2 - 96 |
| W20168N | 2 | H3 - 42 |
| W20270 | 1 | W - 6 |
| W20272 | 1 | W - 89 |
| ACW20140 | 1 | 285 |
| EUD03 | 2 | W - 6 |
| PCX15 | 1 | H - 30 |
| PCX15 | 2 | W - 60 |
| PCX41 | 2 | H - 33 |
| PCX41 | 2 | W - 36 |

| Accessories | | |
|---|---|---|
| ACCY4525NKTTS3 | Cylinder | 1 |
| ACDV737 | Shootbolt | 1 |
| ACDV738 | Shootbolt | 1 |
| ACET044 | Sash S/S Chevron | 4 |
| ACET045 | Outer S/S Chevron | 2 |
| ACET060 | Screw | 2 |
| ACET066 | Screw | 8 |
| ACET066 | Screw | 100mm / 300mm |
| ACET067 | Screw | 10 |
| ACET123 | Screw | 44 |
| ACET234 | Threshold Gasket | 1 x (W) |
| ACET160R | Outer Gasket | 2(W - 58) |
| ACET160R | Outer Gasket | 1(H - 29) |
| ACET160R | Sash Gasket | 2(W - 33) |
| ACET160R | Sash Gasket | 1(H - 16.5) |
| ACET269 | Single Keep | Pair |

| | | |
|---|---|---|
| ACET310 | Outer Frame Cleats | 2 |
| ACET380 | Run Up Block | 2 |
| ACGSL045 | Drainage Cover Cap | 2 |
| ACSM001N | Lever Handle | Pair |
| ACET842 | E Gasket | 6(W - 127) |
| ACET842 | E Gasket | 2(H - 127) |
| ACVS033 | Woolpile | 2(W - 89) |
| ACUN3532 | M4 Threaded Insert | 32 |
| ACUN3537 | Screw | 24 |
| ACW20024 | Sash S/S Chevron | 4 |
| ACW20038 | Wedge Gasket | 6(W - 127) |
| ACW20038 | Wedge Gasket | 2(H - 127) |
| ACW20066 | Lock Keep | 1 |
| ACW20121 | Sash Cleats | 4 |
| ACW20127 | Sash Cleats | 4 |
| ACW20160 | Outer Frame Screw | 4 |
| ACW20147 | W20272 End Caps | Pair |
| ACW20270 | W20270 End Caps | Pair |

| | | |
|---|---|---|
| ACW20360 | Hinge Kit | 4 |
| ACW20367 | PAS24 Roller Keep | 4 |
| ACW20375 | Hinge Protector | 4 |
| ACW20382 | M4 Fixing Plate | 36 |
| ACW20465 | Primary Lock | 1 |

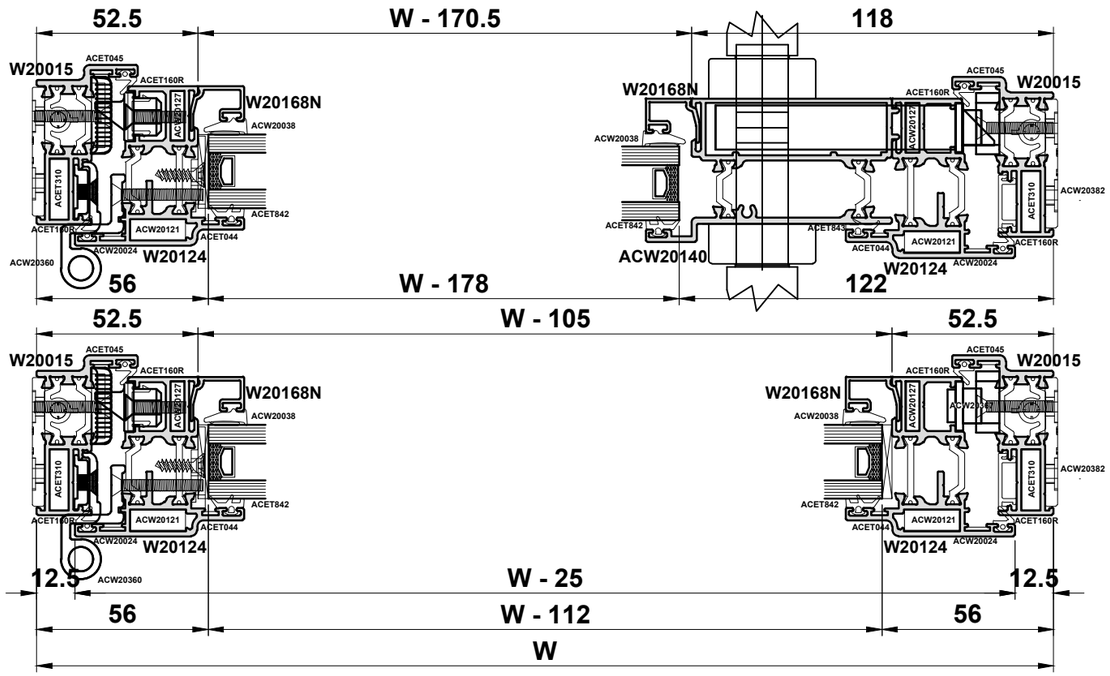


| Glass | |
|---|---|
| G1 | W - 112 X H1 - 65.5 |
| G2 | W - 112 X H2 - 73.5 |
| G3 | W - 178 X H3 - 20 |

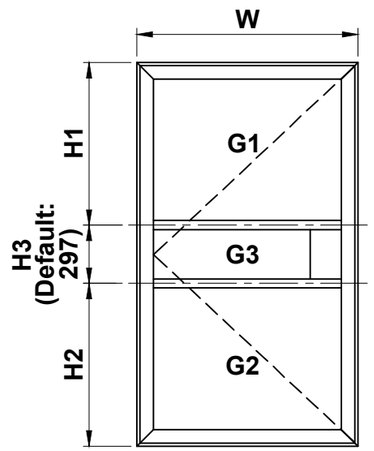


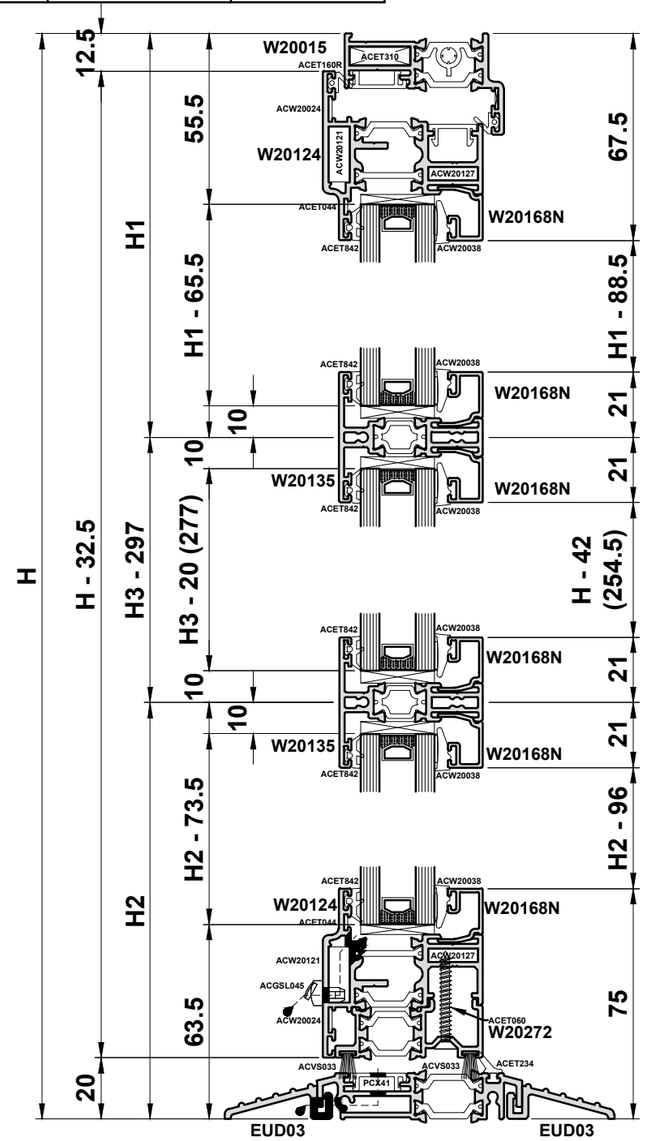


Do Not Scale From This Drawing

# Cutting Information - PAS24 Open Out Double Door

| Profile Cutting Schedule | | |
|---|---|---|
| W20015 | 2 | H |
| W20015 | 2 | W |
| W20046 | 1 | H - 62 |
| W20124 | 4 | H - 25 |
| W20124 | 4 | W/2 - 16 |
| W20135 | 4 | W/2 - 96 |
| W20168N | 4 | W/2 - 161 |
| W20168N | 8 | W/2 - 96 |
| W20168N | 4 | H1 - 88.5 |
| W20168N | 4 | H2 - 88.5 |
| W20168N | 4 | H3 - 42 |
| ACW20140 | 2 | 285 |
| PCX15 | 2 | H - 60 |
| PCX15 | 2 | W/2 - 50 |
| PCX41 | 2 | H - 36 |
| PCX41 | 2 | W - 36 |
| PCX49 | 1 | H - 60 |

| Accessories | | |
|---|---|---|
| ACCY4525NKTTS3 | Cylinder | 2 |
| ACDV737 | Shootbolt | 2 |
| ACDV738 | Shootbolt | 2 |
| ACET044 | Sash S/S Chevron | 8 |
| ACET045 | Outer S/S Chevron | 4 |
| ACET060 | Screw | 4 |
| ACET064 | Screw | 10 |
| ACET066 | Screw | 16 |
| ACET066 | Screw | 2 x 300mm Centres |
| ACET123 | Screw | 40 |
| ACET160R | Outer Gasket | 2(W/2 - 50) |
| ACET160R | Outer Gasket | 2(H - 58) |
| ACET160R | Sash Gasket | 4(W - 33) |
| ACET160R | Sash Gasket | 4(H - 33) |
| ACET310 | Outer Frame Cleats | 4 |
| ACET380 | Run Up Block | 4 |

| | | |
|---|---|---|
| ACSM001N | Lever Handle | 2 Pairs |
| ACET842 | E Gasket | 6(W/2 - 106) |
| ACET842 | E Gasket | 2(H - 127) |
| ACGSL045 | Drainage Cap | 4 |
| ACMX863 | Screw | 1 |
| ACUN3512 | Screw | 12 |
| ACUN3532 | M4 Threaded Insert | 64 |
| ACUN3537 | Screw | 40 |
| ACW20024 | Sash S/S Chevron | 8 |
| ACW20038 | Wedge Gasket | 6(W/2 - 106) |
| ACW20038 | Wedge Gasket | 4(H - 127) |
| ACW20066 | Lock Keep | 1 |
| ACW20121 | Sash Cleats | 8 |
| ACW20127 | Sash Cleats | 8 |
| ACW20160 | Outer Frame Screw | 4 |
| ACW20144 | W20046 End Cap | Pair |
| ACW20360 | Hinge Kit | 8 |

| | | |
|---|---|---|
| ACW20365 | Primary Lock | 1 |
| ACW20366 | Secondary Lock | 1 |
| ACW20367 | PAS24 Roller Keep | 4 |
| ACW20375 | Hinge Protector | 8 |
| ACW20382 | M4 Fixing Plate | 40 |
| ACW20437 | Shoot Bolt Keep | 2 |
| ACW20494 | Meeting Stile Packer | 500mm Centres |

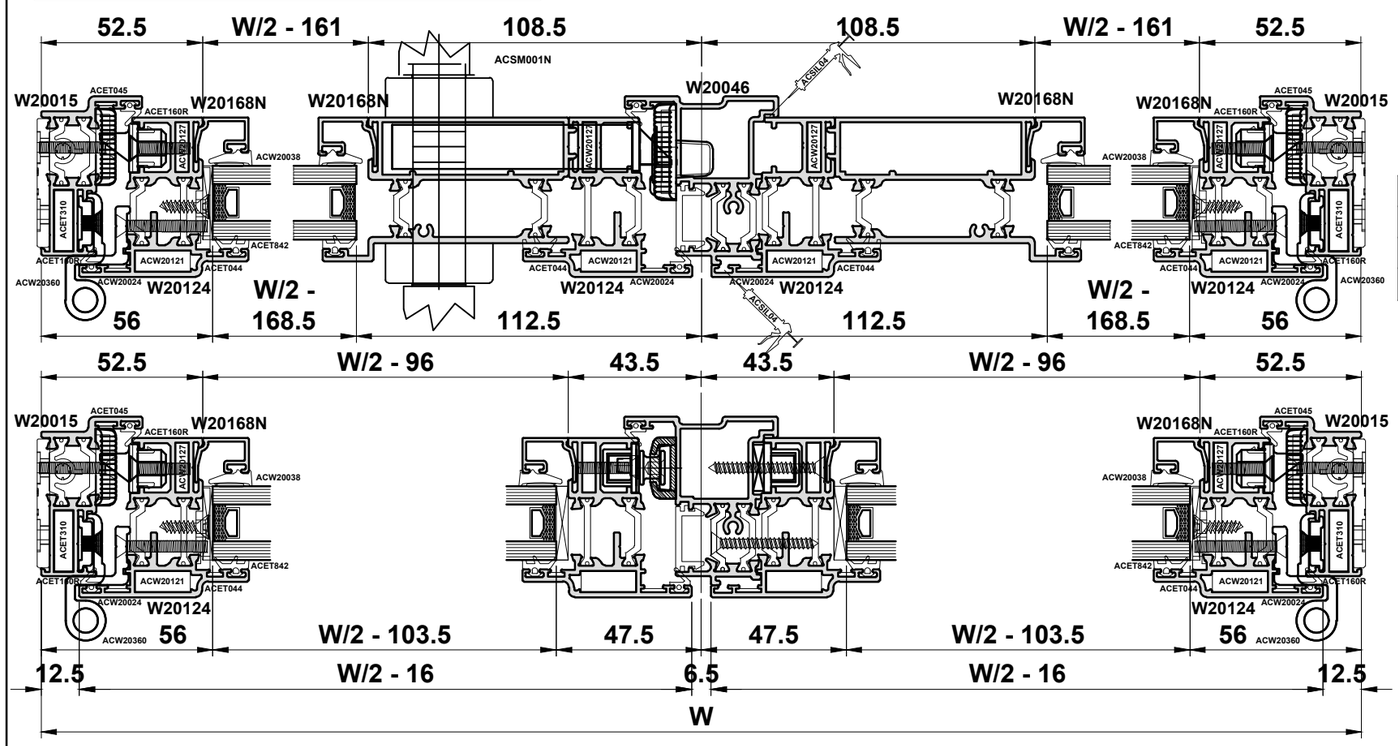


| Glass | |
|---|---|
| G1 | W/2 - 103.5 X H1 - 65.5 |
| G2 | W/2 - 103.5 X H2 - 65.5 |
| G3 | W/2 - 168.5 X H3 - 20 |

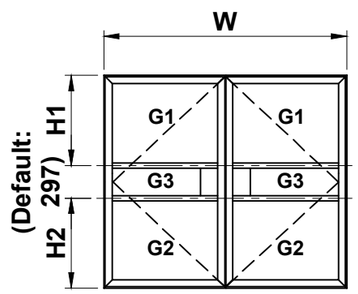


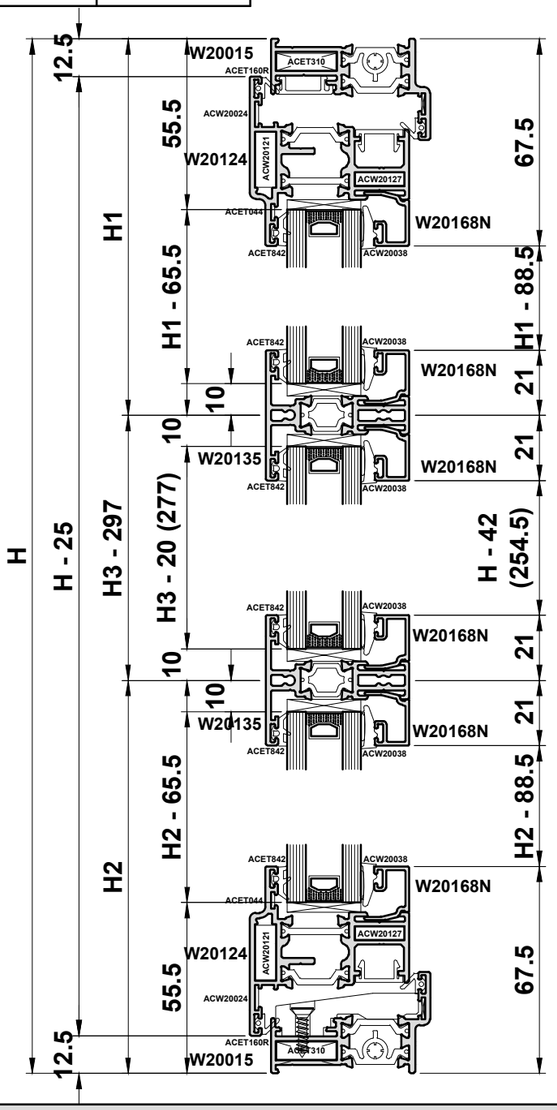


Do Not Scale From This Drawing

# Cutting Information - PAS24 Open Out Double Door Low Threshold

| Profile Cutting Schedule | | |
|---|---|---|
| W20015 | 2 | H - 15 |
| W20015 | 1 | W |
| W20046 | 1 | H - 55 |
| W20124 | 4 | H - 32.5 |
| W20124 | 4 | W/2 - 16 |
| W20135 | 4 | W/2 - 96 |
| W20168N | 4 | W/2 - 161 |
| W20168N | 8 | W/2 - 96 |
| W20168N | 4 | H1 - 88.5 |
| W20168N | 4 | H2 - 96 |
| W20168N | 4 | H3 - 42 |
| W20270 | 1 | W - 6 |
| W20272 | 2 | W/2 (-66 & -79) |
| ACW20140 | 2 | 285 |
| EUD03 | 2 | W - 6 |
| PCX15 | 1 | H - 30 |
| PCX15 | 2 | W/2 - 50 |
| PCX41 | 2 | H - 33 |
| PCX41 | 2 | W - 36 |
| PCX49 | 1 | H - 54 |

| Accessories | | |
|---|---|---|
| ACCY4525NKTTS3 | Cylinder | 2 |
| ACDV737 | Shootbolt | 2 |
| ACDV738 | Shootbolt | 2 |
| ACET044 | Sash S/S Chevron | 8 |
| ACET045 | Outer S/S Chevron | 2 |
| ACET060 | Screw | 4 |
| ACET064 | Screw | 10 |
| ACET066 | Screw | 16 |
| ACET066 | Screw | 100mm / 300mm |
| ACET066 | Screw | 2 x 300mm Centres |
| ACET067 | Screw | 10 |
| ACET123 | Screw | 40 |
| ACET160R | Outer Gasket | 2(W/2 - 50) |
| ACET160R | Outer Gasket | 1(H - 29) |
| ACET160R | Sash Gasket | 4(W - 33) |
| ACET160R | Sash Gasket | 2(H - 16.5) |
| ACET234 | Threshold Gasket | 1(W) |
| ACET310 | Outer Frame Cleats | 2 |
| ACET380 | Run Up Block | 4 |

| | | |
|---|---|---|
| ACSM001N | Lever Handle | 2 Pairs |
| ACET842 | E Gasket | 6(W/2 - 106) |
| ACET842 | E Gasket | 2(H - 127) |
| ACGSL045 | Drainage Cover Cap | 4 |
| ACVS033 | Woolpile | 2(W - 66) |
| ACVS033 | Woolpile | 2(W - 79) |
| ACUN3512 | Screw | 12 |
| ACUN3532 | M4 Threaded Insert | 40 |
| ACUN3537 | Screw | 40 |
| ACW20024 | Sash S/S Chevron | 8 |
| ACW20038 | Wedge Gasket | 6(W - 127) |
| ACW20038 | Wedge Gasket | 4(H - 127) |
| ACW20066 | Lock Keep | 1 |
| ACW20121 | Sash Cleats | 8 |
| ACW20127 | Sash Cleats | 8 |
| ACW20147 | W20046 End Cap | Pair |
| ACW20160 | Outer Frame Screw | 4 |
| ACW20272 | W20272 End Caps | 2 Pairs |
| ACW20270 | W20270 End Caps | Pair |
| ACW20360 | Hinge Kit | 8 |

| | | |
|---|---|---|
| ACW20367 | PAS24 Roller Keep | 4 |
| ACW20375 | Hinge Protector | 8 |
| ACW20382 | M4 Fixing Plate | 40 |
| ACW20437 | Shoot Bolt Keep | 2 |
| ACW20465 | Primary Lock | 1 |
| ACW20466 | Secondary Lock | 1 |
| ACW20494 | Meeting Stile Packer | 500mm Centres |

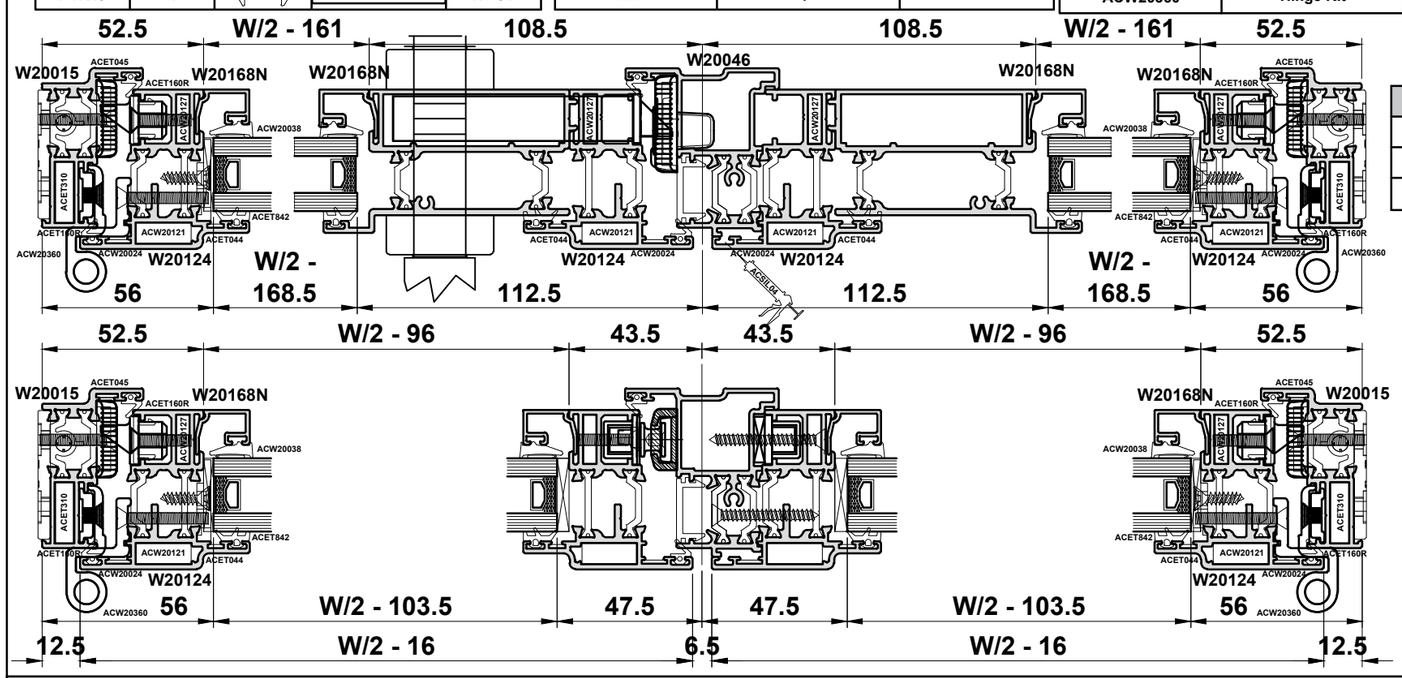


| Glass | |
|---|---|
| G1 | W/2 - 103.5 X H1 - 65.5 |
| G2 | W/2 - 103.5 X H2 - 73.5 |
| G3 | W/2 - 168.5 X H3 - 20 |

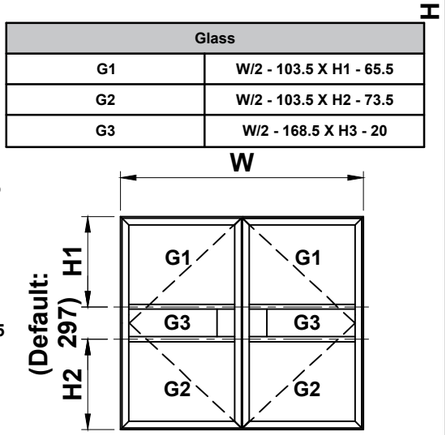


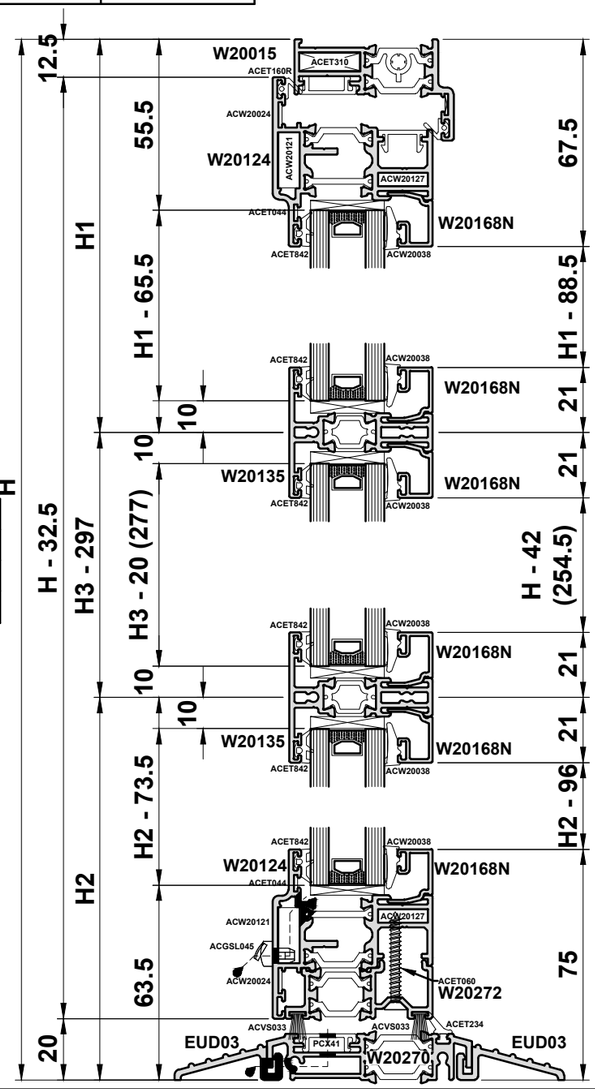


Do Not Scale From This Drawing

# Cutting Information - PAS24 Open In Single Door

| Profile Cutting Schedule | | |
|---|---|---|
| W20015 | 2 | H |
| W20015 | 2 | W |
| W20129 | 2 | H - 25 |
| W20129 | 2 | W - 25 |
| W20135 | 2 | W - 103 |
| W20168N | 2 | W - 168.5 |
| W20168N | 4 | W - 103 |
| W20168N | 2 | H1 - 87.5 |
| W20168N | 2 | H2 - 87.5 |
| W20168N | 2 | H3 - 42 |
| ACW20140 | 1 | 285 |
| PCX15 | 2 | H - 58 |
| PCX15 | 2 | W - 58 |
| PCX41 | 2 | H - 36 |
| PCX41 | 2 | W - 36 |

| Accessories | | |
|---|---|---|
| ACCY4525NKTTS3 | Cylinder | 2 |
| ACDV737 | Shootbolt | 1 |
| ACDV738 | Shootbolt | 1 |
| ACEC025 | S/S Chevron | 4 |
| ACET045 | Outer S/S Chevron | 4 |
| ACET060 | Screw | 2 |
| ACET066 | Screw | 8 |
| ACET123 | Screw | 44 |
| ACET160R | Sash Gasket | 2(H - 33) |
| ACET160R | Sash Gasket | 2(W - 33) |
| ACET269 | Single Keep | Pair |
| ACET310 | Outer Frame Cleats | 4 |
| ACET380 | Run Up Block | 2 |
| ACSM001N | Lever Handle | Pair |
| ACET842 | E Gasket | 6(H - 127) |

| | | |
|---|---|---|
| ACET842 | E Gasket | 2(W - 127) |
| ACET846 | Sash Frame Cleats | 4 |
| ACGSL045 | Drainage Cap | 2 |
| ACMX863 | Screw | 1 |
| ACUN3532 | M4 Threaded Insert | 32 |
| ACUN3537 | Screw | 24 |
| ACVL031N | Outer Gasket | 2(H - 58) |
| ACVL031N | Outer Gasket | 2(W - 58) |
| ACW20024 | Sash S/S Chevron | 4 |
| ACW20038 | Wedge Gasket | 6(W - 127) |
| ACW20038 | Wedge Gasket | 2(H - 127) |
| ACW20126 | Sash Frame Cleats | 4 |
| ACW20160 | Outer Frame Screw | 4 |
| ACW20164 | Hinge Kit | 4 |
| ACW20166 | Lock Keep | 1 |
| ACW20367 | PAS24 Roller Keep | 4 |

| | | |
|---|---|---|
| ACW20375 | Hinge Protector | 4 |
| ACW20382 | M4 Fixing Plate | 16 |
| ACW20383 | M4 Fixing Plate | 4 |
| ACW20386 | M4 Fixing Plate | 4 |
| ACW20465 | Primary Lock | 1 |

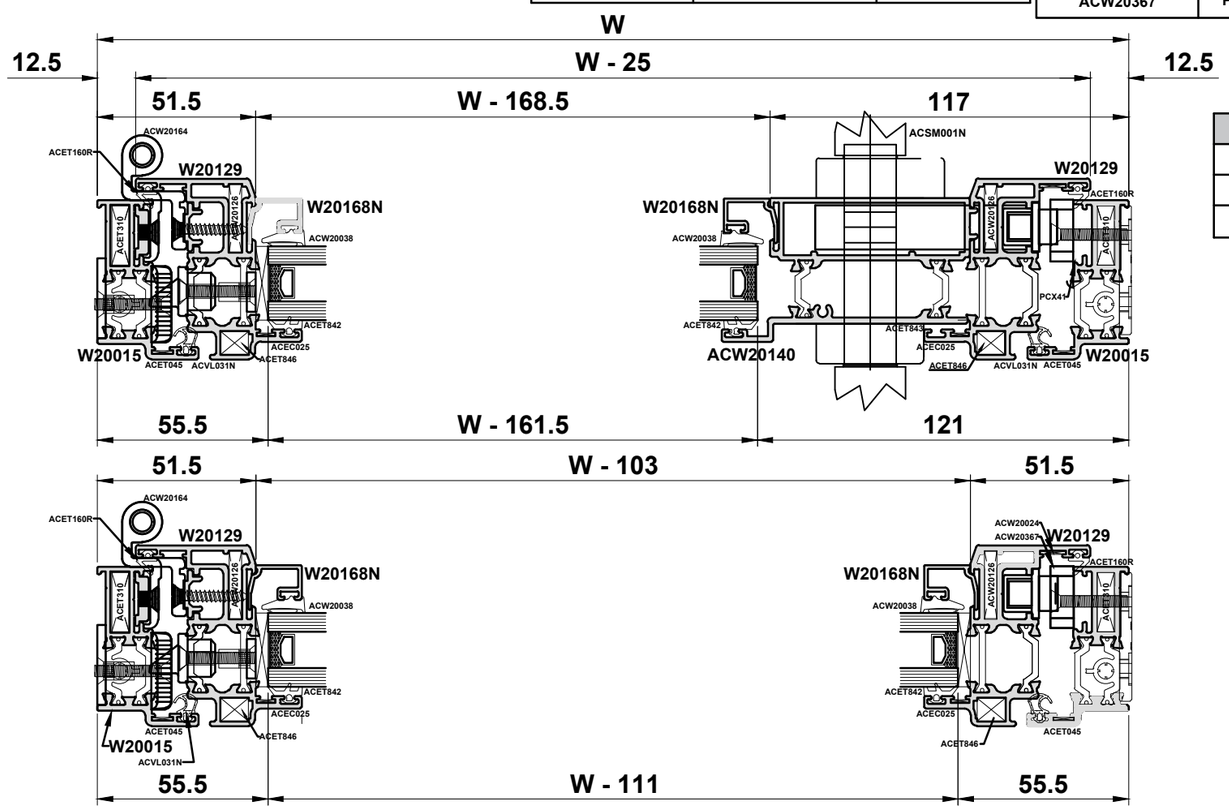


| Glass | |
|---|---|
| G1 | W - 111 X H1 - 65.5 |
| G2 | W - 111 X H2 - 65.5 |
| G3 | W - 161.5 X H3 - 20 |

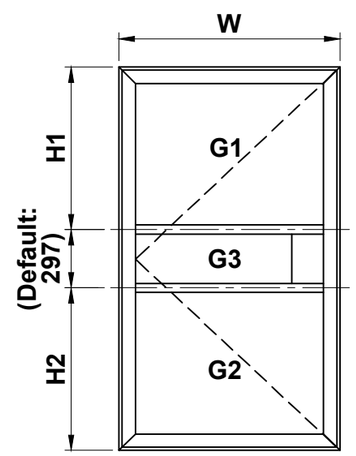


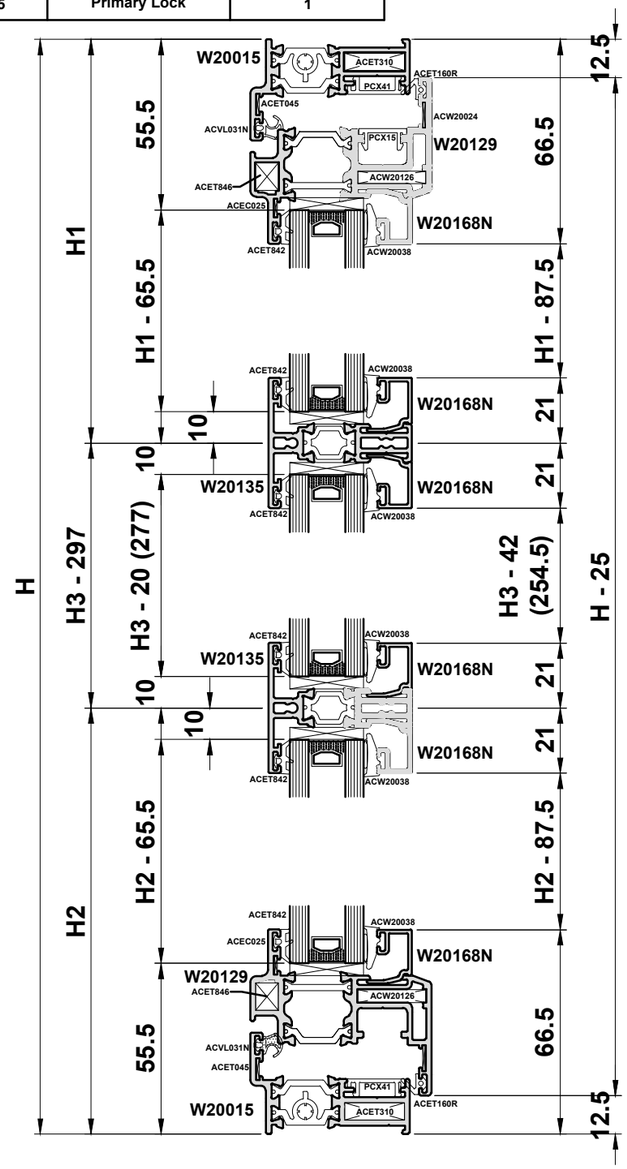


Do Not Scale From This Drawing

# Cutting Information - PAS24 Open In Single Door Low Threshold

| Profile Cutting Schedule | | |
|---|---|---|
| W20015 | 2 | H - 15 |
| W20015 | 1 | W |
| W20129 | 2 | H - 32.5 |
| W20129 | 2 | W - 25 |
| W20135 | 2 | W - 103 |
| W20168N | 2 | W - 168.5 |
| W20168N | 4 | W - 103 |
| W20168N | 2 | H1 - 87.5 |
| W20168N | 2 | H2 - 92 |
| W20168N | 2 | H3 - 42 |
| W20270 | 1 | W - 6 |
| W20274 | 1 | W - 86 |
| ACW20140 | 1 | 285 |
| EUD03 | 2 | W - 6 |
| PCX15 | 1 | H - 29 |
| PCX15 | 2 | W - 58 |
| PCX41 | 2 | H - 33 |
| PCX41 | 2 | W - 36 |
| VL72 | 1 | W - 88 |

| Accessories | | |
|---|---|---|
| ACCY4525NKTTS3 | Cylinder | 2 |
| ACDV737 | Shootbolt | 1 |
| ACDV738 | Shootbolt | 1 |
| ACEC025 | Sash S/S Chevron | 4 |
| ACET045 | Outer S/S Chevron | 2 |
| ACET060 | Screw | 2 |
| ACET066 | Screw | 8 |
| ACET066 | Screw | 100mm / 300mm |
| ACET067 | Screw | 10 |
| ACET123 | Screw | 44 |
| ACET234 | Threshold Gasket | 1(W) |
| ACET160R | Sash Gasket | 1(H - 16.5) |
| ACET160R | Sash Gasket | 2(W - 33) |
| ACET269 | Single Keep | Pair |
| ACET310 | Outer Frame Cleats | 2 |
| ACET380 | Run Up Block | 2 |
| ACSM001N | Lever Handle | Pair |
| ACET842 | E Gasket | 6(H - 127) |

| | | |
|---|---|---|
| ACET842 | E Gasket | 2(W - 127) |
| ACET846 | Sash Frame Cleats | 4 |
| ACGSL045 | Drainage Cover Cap | 2 |
| ACUN3532 | M4 Threaded Insert | 32 |
| ACUN3537 | Screw | 24 |
| ACVL031N | Outer Gasket | 1(H - 29) |
| ACVL031N | Outer Gasket | 2(W - 58) |
| ACVL061 | Rivet for VL72 | W/300 + 2 |
| ACVL072 | End Caps for VL72 | Pair |
| ACVS033 | Woolpile | 2(W - 86) |
| ACW20024 | Sash S/S Chevron | 4 |
| ACW20038 | Wedge Gasket | 6(W - 127) |
| ACW20038 | Wedge Gasket | 2(H - 127) |
| ACW20126 | Sash Frame Cleats | 4 |
| ACW20160 | Outer Frame Screw | 4 |
| ACW20164 | Hinge Kit | 4 |
| ACW20166 | Lock Keep | 1 |
| ACW20270 | W20270 End Caps | Pair |
| ACW20292 | W20274 End Cap | Pair |

| | | |
|---|---|---|
| ACW20367 | PAS24 Roller Keep | 4 |
| ACW20375 | Hinge Protector | 4 |
| ACW20382 | M4 Fixing Plate | 16 |
| ACW20383 | M4 Fixing Plate | 4 |
| ACW20386 | M4 Fixing Plate | 4 |
| ACW20465 | Primary Lock | 1 |
| MUA025 | Screw | 100mm / 300mm |

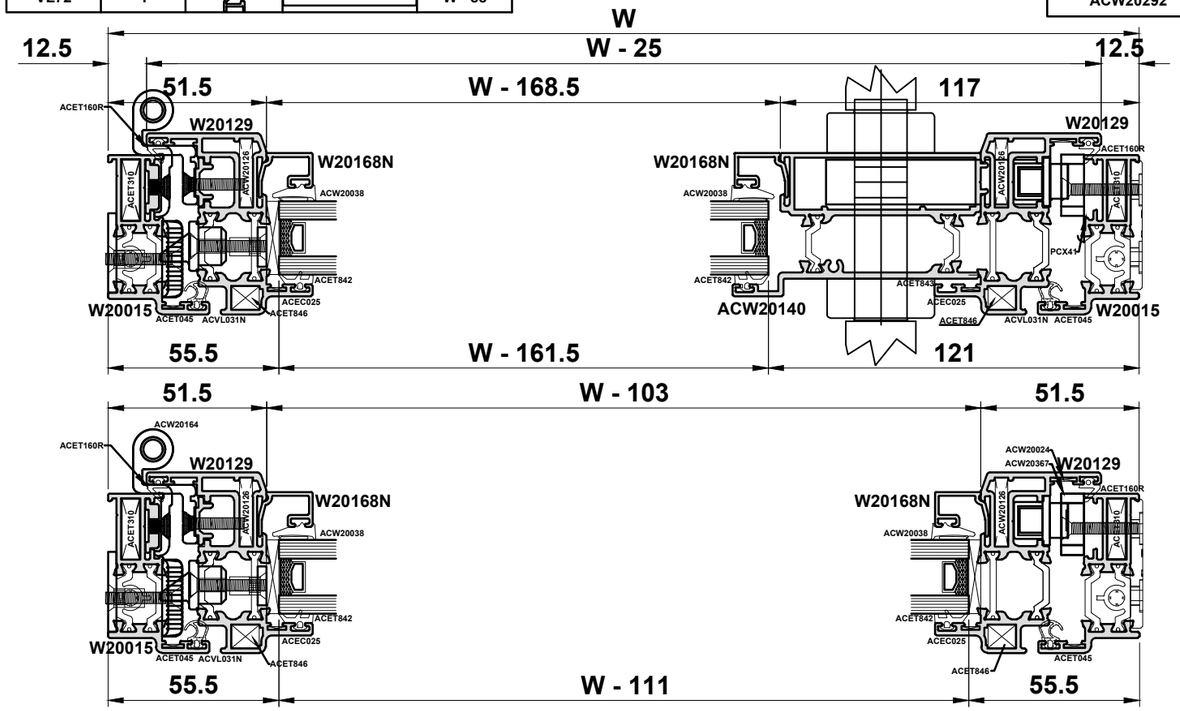


| Glass | |
|---|---|
| G1 | W - 111 X H1 - 65.5 |
| G2 | W - 111 X H2 - 73 |
| G3 | W - 161.5 X H3 - 20 |

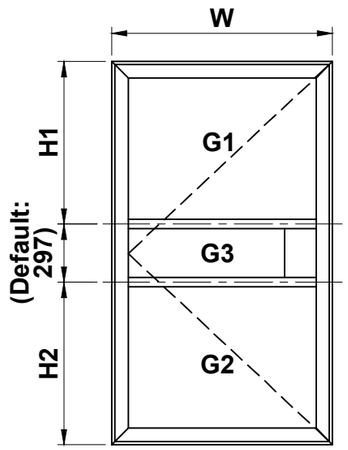


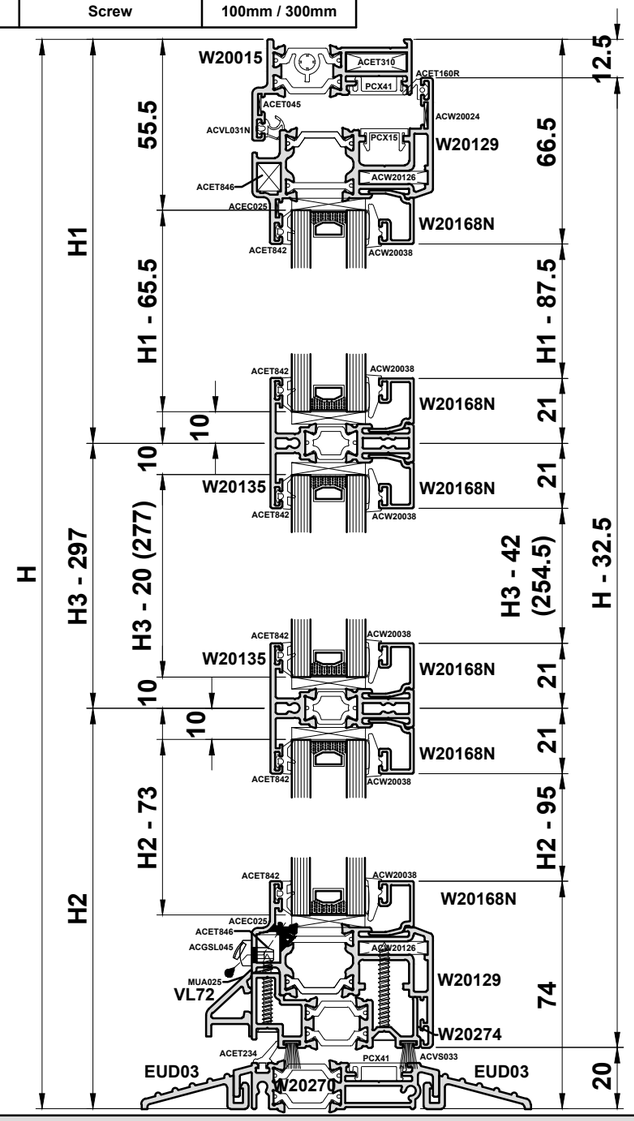

# Cutting Information - PAS24 Open In Double Door

| Profile Cutting Schedule | | | |
|---|---|---|---|
| W20015 | 2 | | H |
| W20015 | 2 | | W |
| W20129 | 4 | | H - 25 |
| W20129 | 4 | | W/2 - 16.5 |
| W20135 | 4 | | W/2 - 94.5 |
| W20149 | 1 | | H - 63 |
| W20168N | 4 | | W/2 - 160 |
| W20168N | 8 | | W/2 - 94.5 |
| W20168N | 4 | | H1 - 87.5 |
| W20168N | 4 | | H2 - 87.5 |
| W20168N | 4 | | H3 - 42 |
| ACW20140 | 2 | | 285 |
| PCX15 | 2 | | H - 58 |
| PCX15 | 2 | | W/2 - 50 |
| PCX41 | 2 | | H - 36 |
| PCX41 | 2 | | W - 36 |
| PCX50 | 1 | | H - 63 |

| Accessories | | |
|---|---|---|
| ACCY4525NKTTS3 | Cylinder | 2 |
| ACDV737 | Shootbolt | 2 |
| ACDV738 | Shootbolt | 2 |
| ACEC025 | Sash S/S Chevron | 8 |
| ACET045 | Outer S/S Chevron | 4 |
| ACET060 | Screw | 4 |
| ACET064 | Screw | 12 |
| ACET066 | Screw | 16 |
| ACET066 | Screw | 300mm Centres |
| ACET123 | Screw | 40 |
| ACET160R | Sash Gasket | 2(H - 33) |
| ACET160R | Sash Gasket | 2(W - 33) |
| ACET310 | Outer Frame Cleats | 4 |
| ACET380 | Run Up Block | 4 |
| ACET392 | Polyamide Screw | 300mm Centres |
| ACSM001N | Lever Handle | 2 Pairs |
| ACET842 | E Gasket | 6(W/2 - 106) |
| ACET842 | E Gasket | 2(H - 127) |

| | | |
|---|---|---|
| ACET846 | Sash Cleats | 8 |
| ACGSL045 | Drainage Cap | 4 |
| ACMX863 | Screw | 1 |
| ACUN3512 | Screw | 12 |
| ACUN3532 | M4 Threaded Insert | 40 |
| ACUN3537 | Screw | 40 |
| ACVL031N | Outer Gasket | 2(H - 58) |
| ACVL031N | Outer Gasket | 2(W/2 - 50) |
| ACW20024 | Sash S/S Chevron | 8 |
| ACW20038 | Wedge Gasket | 6(W/2 - 106) |
| ACW20038 | Wedge Gasket | 2(H - 127) |
| ACW20126 | Sash Cleats | 8 |
| ACW20148 | W20149 End Cap | Pair |
| ACW20160 | Outer Frame Screw | 4 |
| ACW20164 | Hinge Kit | 8 |
| ACW20166 | Lock Keep | 1 |
| ACW20367 | PAS24 Roller Keep | 4 |
| ACW20375 | Hinge Protector | 8 |
| ACW20383 | M4 Fixing Plate | 8 |

| | | |
|---|---|---|
| ACW20385 | Keep | 2 |
| ACW20386 | M4 Fixing Plate | 8 |
| ACW20465 | Primary Lock | 1 |
| ACW20466 | Secondary Lock | 1 |
| ACW20494 | Meeting Stile Packer | 500mm Centres |

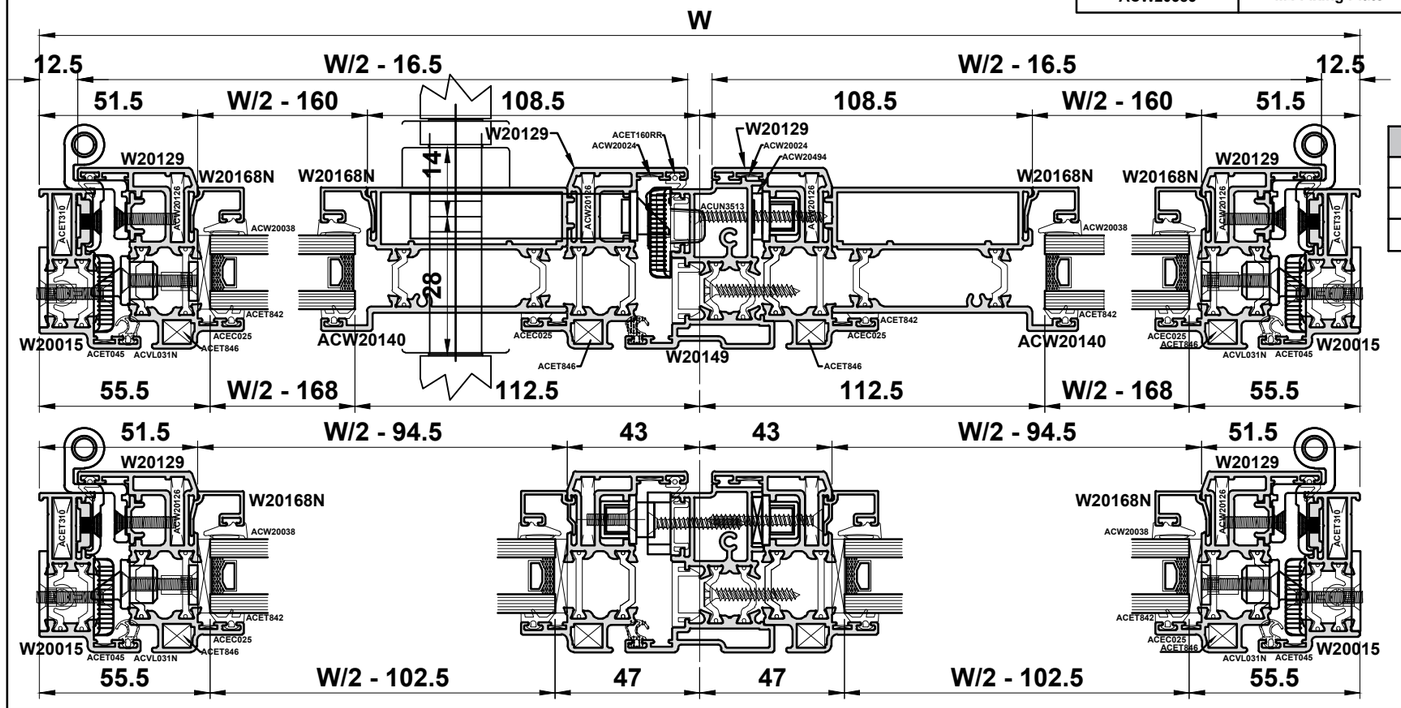


| Glass | |
|---|---|
| G1 | W/2 - 102.5 X H1 - 65.5 |
| G2 | W/2 - 102.5 X H2 - 65.5 |
| G3 | W/2 - 168 X H3 - 20 |

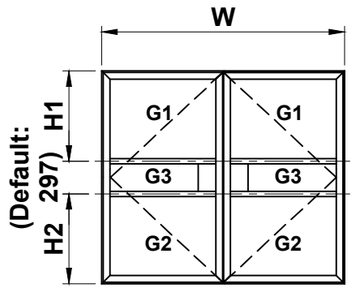


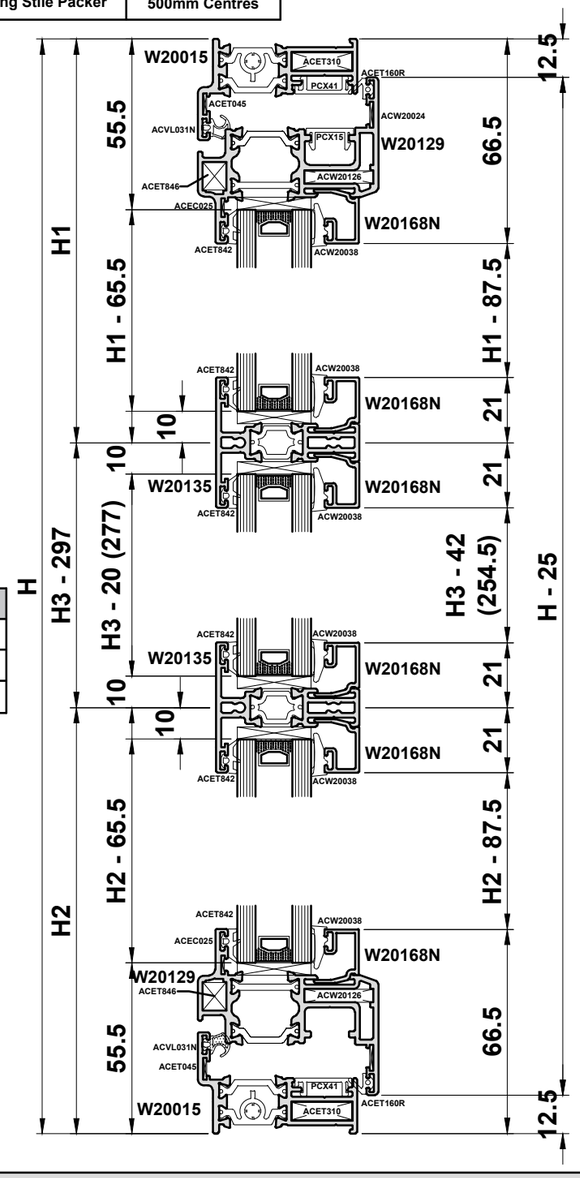


Do Not Scale From This Drawing