Main Index

EHE Index

Index ..... **A01 - A02**

A EHE

Profiles

Specification Pages ..... **A03 - A04**
Technical Information ..... **A05 - A06**
Scale Profile Drawings ..... **A07 - A12**

B EHE

Accessories

Photos & Drawings ..... **B03 - B08**

C EHE

Sections

Scale Elevations ..... **C03 - C12**

D EHE

Statics ..... **D01 - D02**

E EHE

Construction Drawings

Corner Joint Details ..... **E03 - E04**
Drainage Details **E05**
Sealing Glass Unit **E06**
Walk On Roof Assembly **E07**
Intermediate Mullion **E08**
Typical Installation Details **E09**
Kerb Sizes ..... **E10 - E11**
Opening Vent Details ..... **E12 - E17**

F EHE

Sawing Tables

Fixed Rooflight ..... **F03 - F05**
Walk On Rooflight **F06**
Opening Vent Rooflight **F07**

Updates

DATE	PAGE	DESCRIPTION
January 2020	**All Sections**	**Profiles:** **EHE202 Walk On Roof Outer Frame Added.** **EHE230 Mullion Added.** **EHE256 PVC Infill Added.** **UTL049 20mm x 20mm Aluminium Box added.** **Accessories:** **ACPD908 Acrylic Clear Tape Added.** **ACUN3616 Coil Length Amended.** **HEA208 Cleat Pack Added.** **HEA209 Cleat Pack Added.** **HEA210 Support Block Added.** **HEA211 Fixing Bracket Added.** **HEA213 Drill Jig Added.** **HEA214 Drill Jig Added.** **HEA290 Contour Block Added.**
July 2022	**All Sections**	**Profiles:** **EHE200 Superseded by EHE200N.** **EHE201 Triple Glazed Outer Frame Added.** **EHE202 Superseded by EHE202N.** **EHE206 Rooflight Frame Added.** **EHE252 Aluminium Plasterboard Cap.** **Accessories:** **ACET060 Screw Added.** **ACET131 PVC Drainage Cap Added.** **ACET432 Zinc Drainage Cap Added.** **ACMC305 Flipper Gasket Added.** **ACVS042 Fixing Plate** **HEA200 Cleat Kit Removed.** **HEA204 Cleat Kit Added.** **HEA207 Cleat Kit Added.** **HEA208 Cleat Kit Removed.** **HEA212 Cleat Kit Added.** **HEA250 Rooflight Hinge Added.** **HEA254 Opening Pivot Bracket Added.** **HEA255 Fixing Block Added.** **HEA256 Actuator Bracket Added.** **HEA912 changed to HEA918**

Specification

GENERAL DESCRIPTION

The "Aliver Rooflight" roof system described in this manual is designed to offer a modern aluminium flat roof light with concealed fixings.

The system has been designed to make fabrication and site assembly a quick and simple process.

SIZE LIMITS

Rectangular Size Limits (without EHE230 Mullion)

Size limits will be set by third party glass supplier.

Rectangular Size Limits (with EHE230 Mullion) See page D02 for further detail.

Max Length: 6350mm

Max Width: 3000mm

PROFILE SPECIFICATION

The roof sections are constructed of aluminium alloy extrusion to BS EN 755-9 and BS EN 12020, extruded to 6063 T6 alloy. The internal and external extrusions are separated with a polyamide thermal break.

The external aluminium alloy extrusion is pre-treated and finished either:-

a) Anodised to BS 3987: 1987, grade AA25 to a natural self colour.

b) Polyester powder organic coating to BS 6496. Dual colour is available.

GENERAL MANUFACTURING

The roof is made by cutting the frame profiles with accurate 45° mitred ends using Tungsten Carbide Tipped Saw Blades, operating at approximately 3000 rpm.

The corners are joined using machine screws into extruded cleats through the mitred ends of the section.

On polyester powder coated finishes, great care should be taken to avoid getting gap sealer on visible surfaces and should be removed as soon as possible with a clean cloth.

Care should be exercised when using products not supplied by Smart Systems Ltd as no responsibility can be accepted.

For advise on frame sizes outside of the recommended design limitations, please contact the Technical Department at Smart Systems Ltd Tel: 01934 876100

Specification

MANUFACTURING INFORMATION

The Outer Frame members are cut with 45° mitred ends to the overall size required, measured to the longest point of the metal.

Corners are formed by either drilling, using drill jig ACVG956, or punching, using punch tool HEA918, the corners ready for the cleat machine screws. Then, coating the cut faces to be joined with a suitable small gap sealer. Into the mitred corner insert the cleat glue and the required corner cleats. The two mitred ends are then brought together and screwed. The small gap sealer ensures a permanent joint and guards against the ingress of moisture and joint movement (sealer requires a minimum of 48 hours to cure). After screwing the corner joint, special care should be taken to ensure any excess sealer is removed from painted surfaces.

INSTALLATION INFORMATION

The Rooflight shall be fitted to a kerb with a minimum height of 150mm above the finished surface. The overall external dimensions of the kerb must be measured, including the finishes, to establish the overall dimensions of the rooflight.

The rooflight is sealed and fitted on top of the finished kerb and secured using fixing lugs or direct fixing as shown in section E of this manual.

To aid water run-off, we recommend installing the roofight at a minimum pitch of 5°.

Aliver Rooflight U Values

Please refer to the Smart Systems' Document L White Paper or contact the Technical Department.

GLAZING

Rooflight glazing must comply with the standards set by BS EN 1991-1-1 & CWCT TN61-TN69 depending on the roof light application and requirements. Please liaise with your glass supplier for specification.

We recommend a 75mm border around the perimeter of the units to mask the frame from the outside.

The glass is to be bonded using ACUN3610 high quality single component adhesive applied in the workshop at least a day prior to installation. Please refer to the glazing pages in the manual for full instructions.

TEST CERTIFICATE

	Max Test Pressure	Classification
Air Permeability Classification	600 Pa	4
Watertightness Classification	1500 Pa	E1500
Resistance To Wind Classification	2000 Pa	C5

Aliver Rooflight

PROFILES : TECHNICAL INFORMATION

Number	Picture	Page	Perim. mm	Mec. mm	Ix(cm4) wx(cm3)	Iy(cm4) wy(cm3)	Length	Pack pr.	MF	SA	KL	HP	M
EHE200N	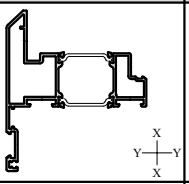	A07	531	125	40.17 — 7.06	71.2 — 23.04	6.5	-	✓	✓	✓	✓	✓
EHE201	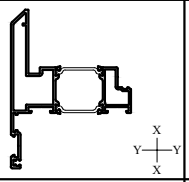	A08	563	139	58.87 — 9.59	74.58 — 25.72	6.5	-	✓	✓	✓	✓	✓
EHE202N	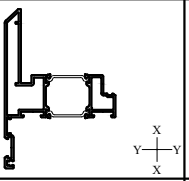	A09	583	149	75.45 — 11.28	76.5 — 27.13	6.5	-	✓	✓	✓	✓	✓
EHE206	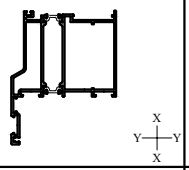	A11	718	191	98.80 — 13.86	94.83 — 23.65	6.5	-	✓	✓	✓	✓	✓
EHE230	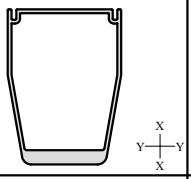	A10	286	207	75.09 — 15.36	31.62 — 10.54	6.5	-	✓	✓	✓	✓	✓
EHE250	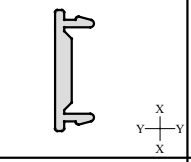	A07	50	16	- — -	- — -	4.0	-	✓	✓	✓	✓	
EHE252	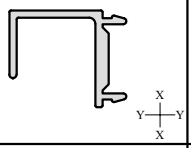	A07	98	28	- — -	- — -	4.0	-	✓	✓	✓	✓	
EHE254	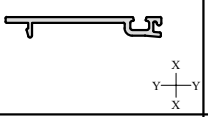	A11	113	40	- — -	- — -	6.5	-	✓	✓	✓	✓	
EHE255	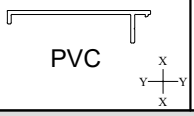 PVC	A07	189	-	- — -	- — -	5.0	-	✓				

A = Outside
B = Inside

MF = Mill Finish
SA = Silver Anodised
KL = Basic Colour
HP = Special Colour
M = Dual Colour

smart architectural aluminium

Aliver Rooflight

PROFILES : TECHNICAL INFORMATION

Number	Picture	Page	Perim. mm	Mec. mm	Ix(cm4) wx(cm3)	Iy(cm4) wy(cm3)	Length	Pack pr.	MF	SA	KL	HP	M
EHE256	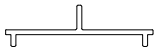 PVC	A10	161	-	- / - / -	- / - / -	5.0	-	✓				
UTL049	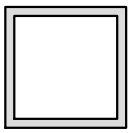	A09	64	64	- / - / -	- / - / -	6.0	-	✓	✓	✓	✓	

A = Outside
B = Inside

MF = Mill Finish
SA = Silver Anodised
KL = Basic Colour
HP = Special Colour
M = Dual Colour

ISSUED : November 2022

Primary Visible Side — Secondary Visible Side — · — · — · — · — · — · — · — · — · —

EHE200N

Outer Frame / Sash

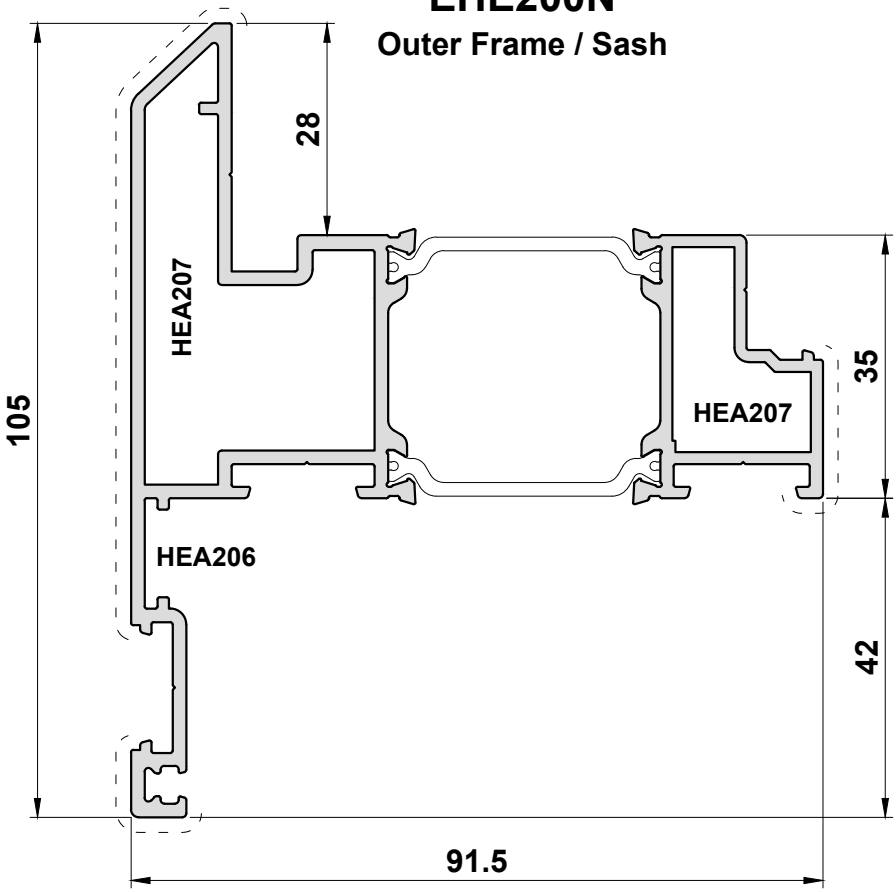

EHE255

PVC Glass Support

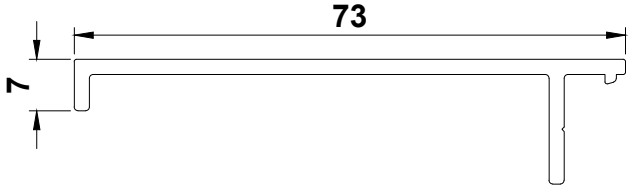

EHE250

Aluminium Infill

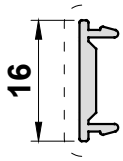

EHE252

Aluminium Infill Plaster Board Cap

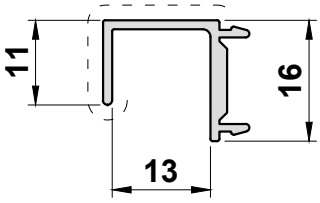

Scale 1:1

Primary Visible Side - - - - - - - - - - - - - - - - - - Secondary Visible Side — · — · — · — · — · — · — · —

EHE201

Triple Glazed Outer Frame

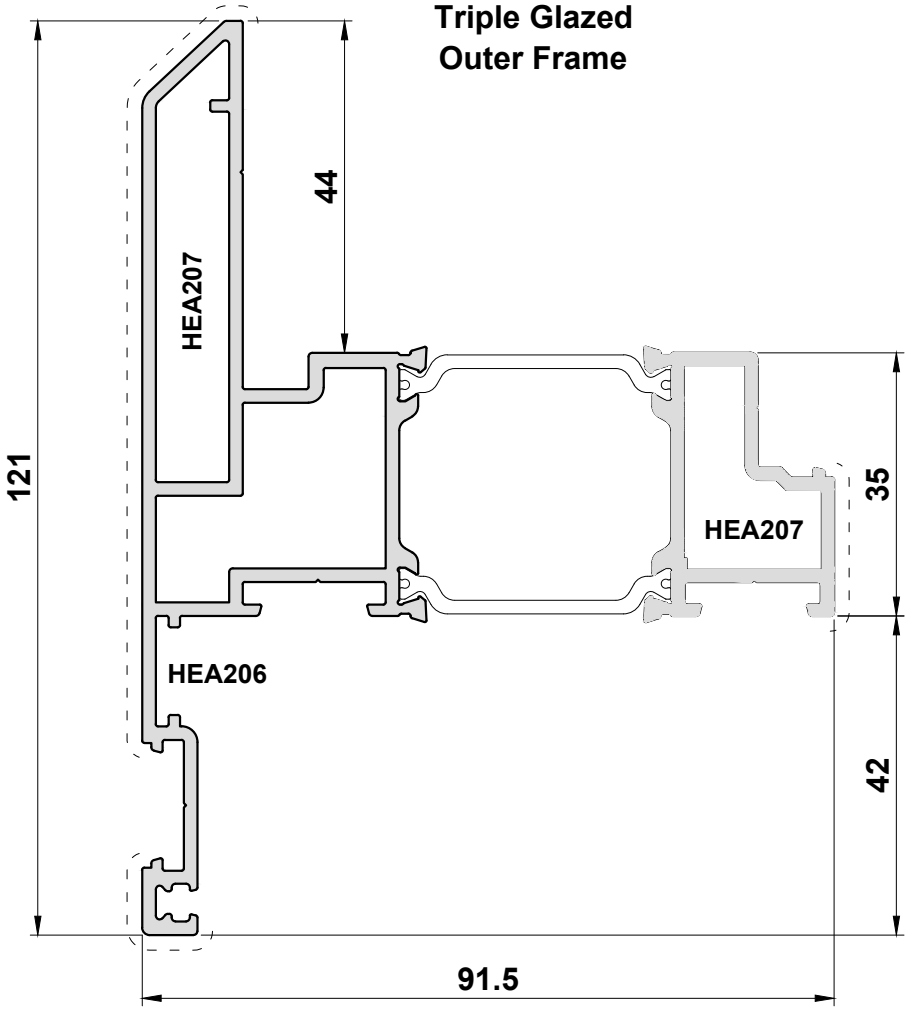

Scale 1:1

ISSUED : November 2022

Primary Visible Side — — —

Primary Visible Side - - - - - - - - - - - - - - - - - - Secondary Visible Side — · — · — · — · — · — · — · — · —

EHE256

EHE230 PVC
Glass Support

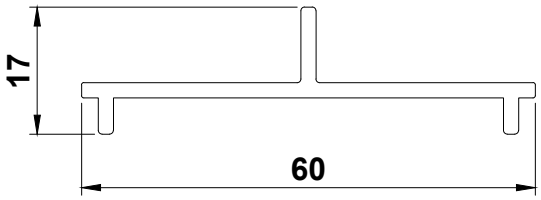

EHE230

Intermediate
Mullion

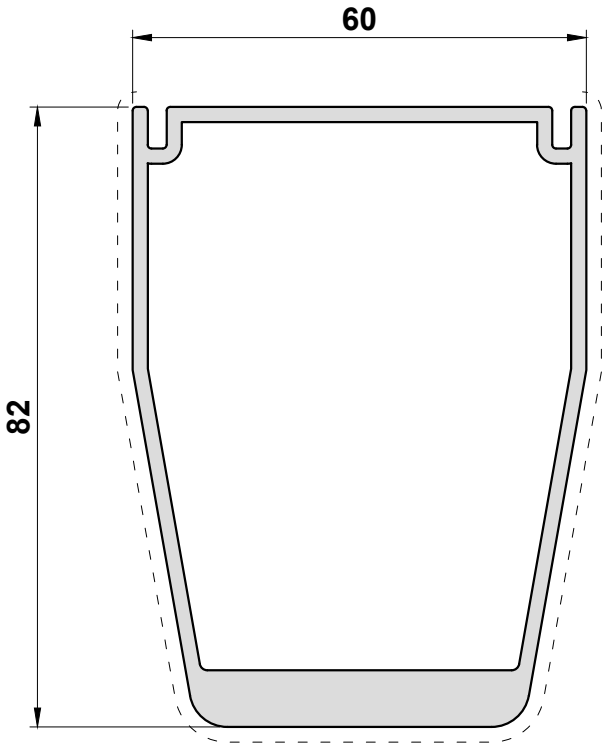

Scale 1:1

Primary Visible Side - - - - - - - - - - - - - - - - - - Secondary Visible Side — · — · — · — · — · — · —

EHE206

Opening
Outer Frame

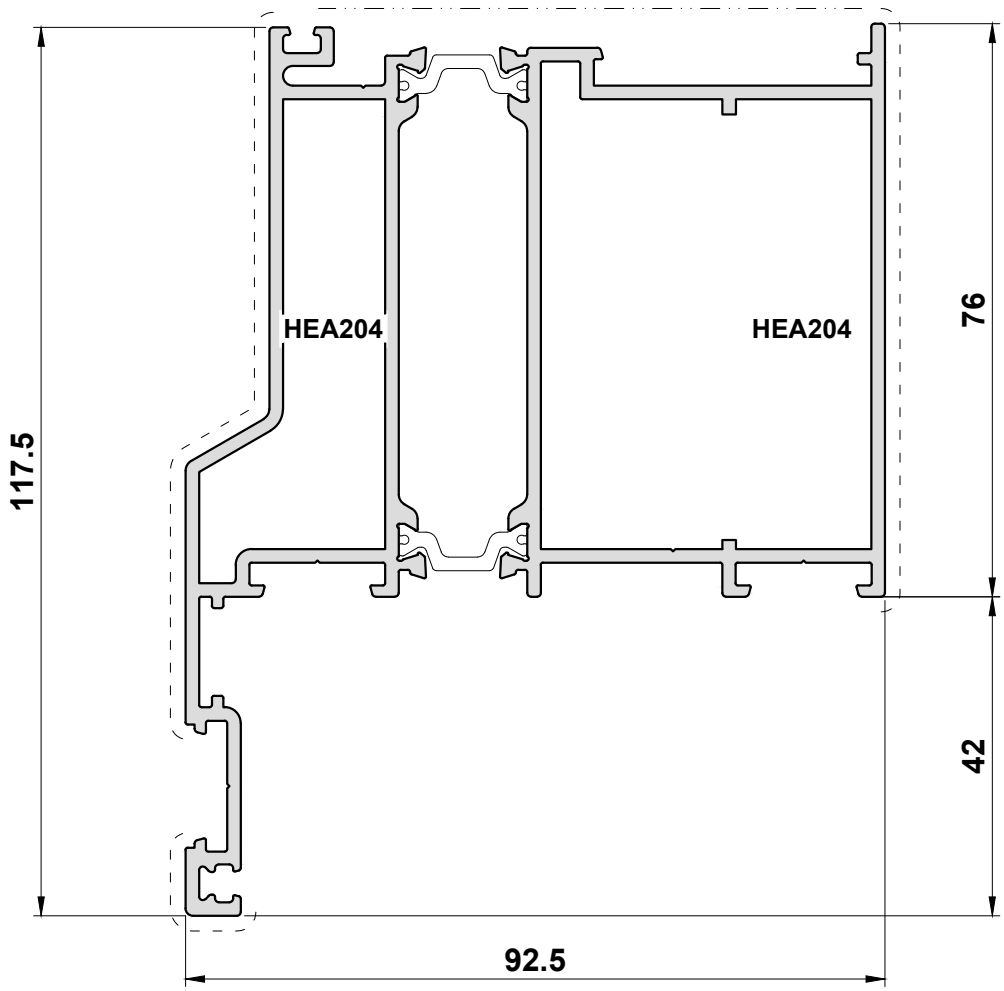

EHE254

Gasket Carrier

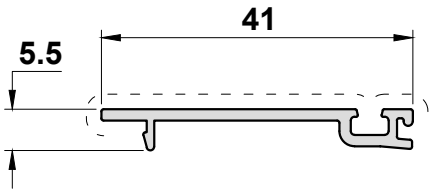

Scale 1:1

Aliver Rooflight

PROFILE : SCALED PROFILE DRAWINGS

Primary Visible Side - - - - - - - - - - - - - - - - - - **Secondary Visible Side** — · · — · · — · · — · · — · · — · · — · · —

Scale 1:1

ISSUED : November 2022

Section B

Accessories

Photos & Drawings

Image	Part Code	Pack	Unit	Application	Colour	
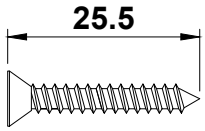	**ACET060** **No. 7 x 25.5 S/S Self Tapping CSK Screw**	**100**	**pack**	**HEA250**	MF	✓
					SA	
					KL	
					HP	
					SSC	
					SMC	
					W	
					Z	
					PC	
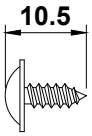	**ACET068** **No. 8 x 10 S/S Self Tapping Flange Screw**	**100**	**pack**	**EHE255**	MF	✓
					SA	
					KL	
					HP	
					SSC	
					SMC	
					W	
					Z	
					PC	
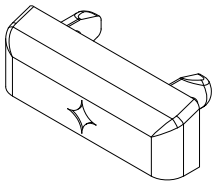	**ACET131** **Drainage Cover Cap** **For colour matched drainage caps see ACET432**	**100**	**pack**		MF	
					SA	
					KL	
					HP	
					SSC	
					SMC	
					W	✓
					Z	✓
					PC	
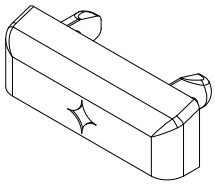	**ACET432** **Drainage Cover Cap** **Colour Matched Drainage Caps**	**10**	**pack**		MF	
					SA	
					KL	✓
					HP	✓
					SSC	
					SMC	
					W	
					Z	
					PC	
	ACMC305 **Flipper Gasket**	**50**	**m**	**EHE254**	MF	
					SA	
					KL	
					HP	
					SSC	
					SMC	
					W	
					Z	✓
					PC	

T-BARS
ACVG65=2.5mm
ACVG66=3.0mm
ACVL150=4.0mm

Screw (Grub)

MF = Mill Finish
SA = Silver Anodised
KL = Basic Colour
HP = Special Colour
SSC = Smooth Satin Chrome
SMC = Smokey Chrome
PC = Polished Chrome
W = White
Z = Black

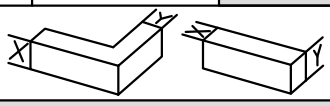

Image	Part Code	Pack	Unit	Application	Colour
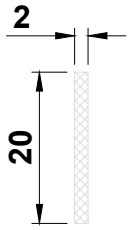	**ACPD908** **2mm x 20mm Acrylic Clear Tape**	**16.5**	**m**	**UTL049**	MF ✓ SA KL HP SSC SMC W Z PC
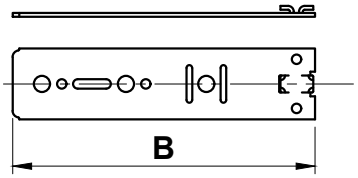	**ACUN23X** **Screw Fixing Lug B x 38mm x 2mm** **ACUN230: B = 160mm** **ACUN232: B = 240mm** **ACUN233: B = 280mm**	**100**	**Pack**	**EHE200N EHE201 EHE202N EHE206**	MF SA KL HP SSC SMC W Z PC
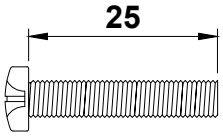	**ACUN3514** **M5 x 25 S/S Pan Head Machine Screw**	**100**	**pack**	**HEA254**	MF SA KL HP SSC SMC W Z PC
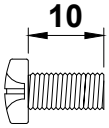	**ACUN3558** **M5 x 10 S/S Pan Head Machine Screw**	**100**	**pack**	**HEA255**	MF SA KL HP SSC SMC W Z PC
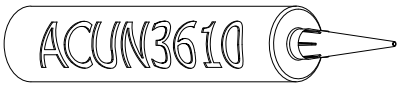	**ACUN3610** **Single Component Adhesive**	**1**	**Each**		MF SA KL HP SSC SMC W Z PC

T-BARS
ACVG65=2.5mm
ACVG66=3.0mm
ACVL150=4.0mm

Screw (Grub)

MF = Mill Finish
SA = Silver Anodised
KL = Basic Colour
HP = Special Colour
SSC = Smooth Satin Chrome
SMC = Smokey Chrome
PC = Polished Chrome
W = White
Z = Black

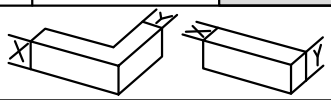

Image	Part Code	Pack	Unit	Application	Colour	
	ACUN3612 **Surface Activator (1L)**	**1**	**Each**		MF SA KL HP SSC SMC W Z PC	
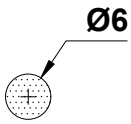	**ACUN3616** **ACUN3610 Backing Rod**	**20**	**m**	**EHE200N** **EHE201** **EHE202N** **ACUN3610**	MF SA KL HP SSC SMC W Z PC	
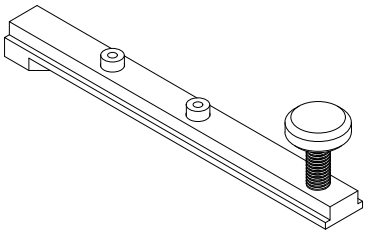	**ACVG956** **Drill Jig**	**1**	**each**	**EHE200N** **EHE201** **EHE202N**	MF SA KL HP SSC SMC W Z PC	✓
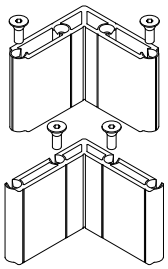	**HEA204** **Cleat Pack** **Contains:** **Outside Cleat x 4** **Inside Cleat x 4** **Screws x 16**	**1**	**pack**	**EHE206**	MF SA KL HP SSC SMC W Z PC	✓
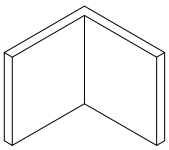	**HEA206** **Corner Chevron**	**8**	**pack**	**EHE200N** **EHE201** **EHE202N**	MF SA KL HP SSC SMC W Z PC	✓

T-BARS
ACVG65=2.5mm
ACVG66=3.0mm
ACVL150=4.0mm

Screw (Grub)

MF	**= Mill Finish**	**W**	**= White**
SA	**= Silver Anodised**	**Z**	**= Black**
KL	**= Basic Colour**		
HP	**= Special Colour**		
SSC	**= Smooth Satin Chrome**		
SMC	**= Smokey Chrome**		
PC	**= Polished Chrome**		

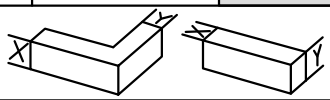

Aliver Rooflight

ACCESSORIES : PHOTOS & DRAWINGS

Image	Part Code	Pack	Unit	Application	Colour
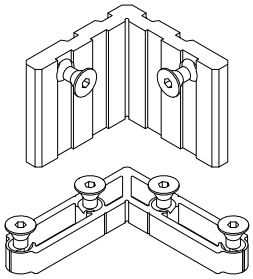	**HEA207** **Cleat Pack** **Contains:** **Outside Cleat x 4** **Inside Cleat x 4** **Screws x 24**	**1**	**pack**	**EHE200N** **EHE201** **EHE202N**	MF ✓ SA KL HP SSC SMC W Z PC
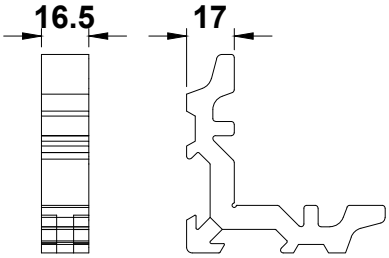	**HEA209** **Cleat Pack** **Contains:** **Cleat x 4** **Mechanical Blocks x 8**	**4**	**pack**	**UTL049**	MF ✓ SA KL HP SSC SMC W Z PC
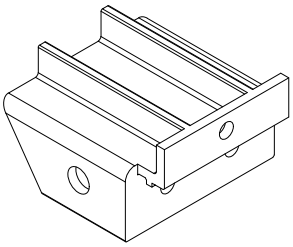	**HEA210** **EHE230 Support Bracket**	**2**	**pack**	**EHE200N** **EHE230** **HEA211**	MF ✓ SA KL HP SSC SMC W Z PC
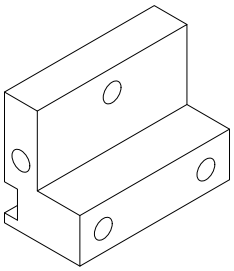	**HEA211** **EHE230 Fixing Bracket**	**2**	**pack**	**EHE200N** **EHE230** **HEA210**	MF ✓ SA KL HP SSC SMC W Z PC
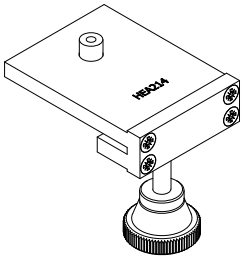	**HEA213** **Drill Jig**	**1**	**each**	**EHE230**	MF ✓ SA KL HP SSC SMC W Z PC

T-BARS
ACVG65=2.5mm
ACVG66=3.0mm
ACVL150=4.0mm

Screw (Grub)

MF	**= Mill Finish**	**W**	**= White**
SA	**= Silver Anodised**	**Z**	**= Black**
KL	**= Basic Colour**		
HP	**= Special Colour**		
SSC	**= Smooth Satin Chrome**		
SMC	**= Smokey Chrome**		
PC	**= Polished Chrome**		

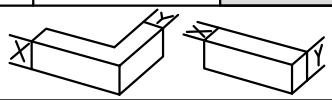

ISSUED : November 2022

Image	Part Code	Pack	Unit	Application	Colour	
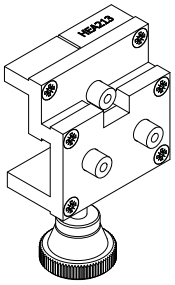	**HEA214** **Drill Jig**	**1**	**each**	**EHE200N**	MF	✓
					SA	
					KL	
					HP	
					SSC	
					SMC	
					W	
					Z	
					PC	
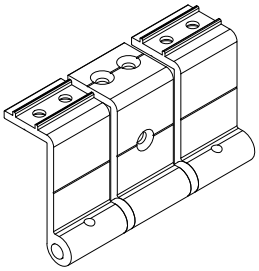	**HEA250** **Opening Rooflight Hinges** **25kg limit per hinge.**	**1**	**each**	**EHE200N** **EHE206** **ACVS042**	MF	✓
					SA	
					KL	✓
					HP	
					SSC	
					SMC	
					W	✓
					Z	✓
					PC	
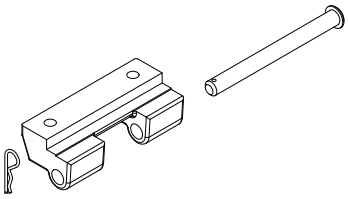	**HEA254** **Chain Bracket**	**1**	**each**	**EHE200N** **HEA255**	MF	✓
					SA	
					KL	
					HP	
					SSC	
					SMC	
					W	
					Z	
					PC	
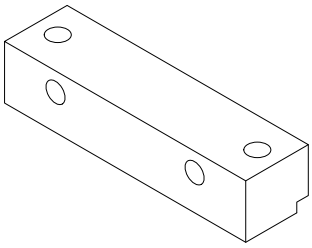	**HEA255** **HEA254 Fixing Bracket**	**1**	**each**	**EHE200N** **HEA254**	MF	✓
					SA	
					KL	
					HP	
					SSC	
					SMC	
					W	
					Z	
					PC	
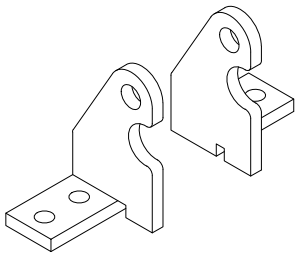	**HEA256** **Stainless Steel Actuator Brackets**	**1**	**pair**	**EHE206** **ACVS042**	MF	✓
					SA	
					KL	
					HP	
					SSC	
					SMC	
					W	
					Z	
					PC	

T-BARS
ACVG65=2.5mm
ACVG66=3.0mm
ACVL150=4.0mm

Screw (Grub)

MF = Mill Finish
SA = Silver Anodised
KL = Basic Colour
HP = Special Colour
SSC = Smooth Satin Chrome
SMC = Smokey Chrome
PC = Polished Chrome
W = White
Z = Black

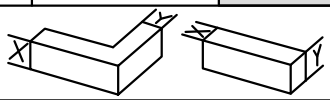

Image	Part Code	Pack	Unit	Application	Colour	
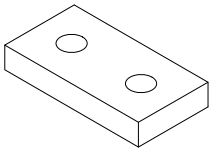	**HEA257** **M5 Fixing Plate**	**1**	**pair**	**EHE206** **HEA256**	MF	
					SA	
					KL	
					HP	
					SSC	
					SMC	
					W	
					Z	
					PC	
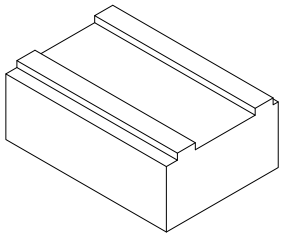	**HEA290** **Contour Block**	**1**	**pair**	**EHE200** **EHE202**	MF	✓
					SA	
					KL	
					HP	
					SSC	
					SMC	
					W	
					Z	
					PC	
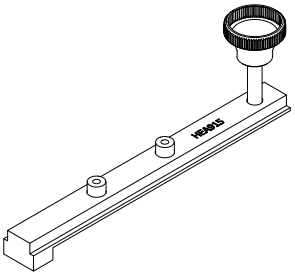	**HEA915** **EHE206 Corner Drill Jig**	**1**	**each**	**EHE206** **HEA204**	MF	
					SA	
					KL	
					HP	
					SSC	
					SMC	
					W	
					Z	
					PC	
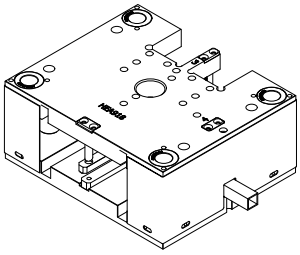	**HEA918** **Punch Tool**	**1**	**each**	**EHE200N** **EHE201** **EHE202N** **UTL049**	MF	✓
					SA	
					KL	
					HP	
					SSC	
					SMC	
					W	
					Z	
					PC	
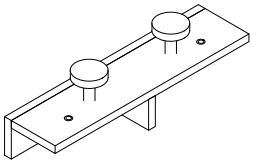	**HEA919** **External Cleat Drill Jig**	**1**	**each**	**EHE200N** **EHE201** **EHE202N** **HEA207** **HEA212**	MF	
					SA	
					KL	
					HP	
					SSC	
					SMC	
					W	
					Z	
					PC	

T-BARS
ACVG65=2.5mm
ACVG66=3.0mm
ACVL150=4.0mm

Screw (Grub)

MF = Mill Finish
SA = Silver Anodised
KL = Basic Colour
HP = Special Colour
SSC = Smooth Satin Chrome
SMC = Smokey Chrome
PC = Polished Chrome
W = White
Z = Black

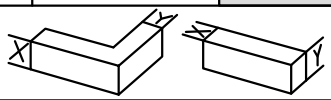

Image	Part Code	Pack	Unit	Application	Colour	
	ACMX09700 **Alu. Polish**	**1**	**each**		MF	✓
					SA	
					KL	
					HP	
					SSC	
					SMC	
					W	
					Z	
					PC	
	ACMX09761 **Maxi Gloss**	**1**	**each**		MF	
					SA	
					KL	
					HP	
					SSC	
					SMC	
					W	
					Z	
					PC	
	ACMX09762 **Alu. Bright**	**1**	**each**		MF	
					SA	
					KL	
					HP	
					SSC	
					SMC	
					W	
					Z	
					PC	
	ACMX09763 **Teflon Spray**	**1**	**each**		MF	
					SA	
					KL	
					HP	
					SSC	
					SMC	
					W	
					Z	
					PC	
	ACMX09764 **Maxi Clean**	**1**	**each**		MF	
					SA	
					KL	
					HP	
					SSC	
					SMC	
					W	
					Z	
					PC	

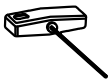

T-BARS
ACVG65=2.5mm
ACVG66=3.0mm
ACVL150=4.0mm

Screw (Grub)

MF = Mill Finish
SA = Silver Anodised
KL = Basic Colour
HP = Special Colour
SSC = Smooth Satin Chrome
SMC = Smokey Chrome
PC = Polished Chrome
W = White
Z = Black

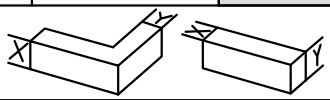

Aliver Rooflight

STANDARD ACCESSORIES

Image	Part Code	Pack	Unit	Application	Colour
	ACMX09765 **Alu. Cleaner**	**1**	**each**		MF SA KL HP SSC SMC W Z PC
	ACMX09770 **Roll & Wrap 100mm**	**1**	**each**		MF SA KL HP SSC SMC W Z PC
	ACMX09775 **Grip Handwrap**	**1**	**each**		MF SA KL HP SSC SMC W Z PC
	ACMX09801 **Protective Tape 50mm**	**1**	**each**		MF SA KL HP SSC SMC W Z PC
	ACMX09802 **Protective Tape 70mm**	**1**	**each**		MF SA KL HP SSC SMC W Z PC

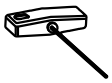

T-BARS
ACVG65=2.5mm
ACVG66=3.0mm
ACVL150=4.0mm

Screw (Grub)

MF = Mill Finish
SA = Silver Anodised
KL = Basic Colour
HP = Special Colour
SSC = Smooth Satin Chrome
SMC = Smokey Chrome
PC = Polished Chrome
W = White
Z = Black

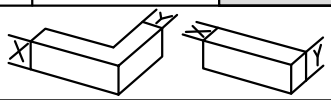

ISSUED : November 2022

Aliver Rooflight

STANDARD ACCESSORIES

Image	Part Code	Pack	Unit	Application	Colour	
	ACMX09803 **Protective Tape 100mm**	**1**	**each**		MF SA KL HP SSC SMC W Z PC	
	ACMX09830 **Rubber Sealant**	**1**	**each**		MF SA KL HP SSC SMC W Z PC	
	ACSIL04 **Sealing Glue** **Order with suffix of KL colour (eg.ACSIL04KL005) or BL=Black/WP=White/ CL=Clear**	**1**	**each**		MF SA KL ✓ HP SSC SMC W ✓ Z ✓ PC	
	ACSIL08 **Silicon Gun**	**1**	**each**		MF SA KL HP SSC SMC W Z PC	
	ACSIL013 **Glue for Mitre**	**1**	**each**		MF SA KL HP SSC SMC W Z PC	

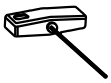

T-BARS
ACVG65=2.5mm
ACVG66=3.0mm
ACVL150=4.0mm

Screw (Grub)

MF = Mill Finish
SA = Silver Anodised
KL = Basic Colour
HP = Special Colour
SSC = Smooth Satin Chrome
SMC = Smokey Chrome
PC = Polished Chrome
W = White
Z = Black

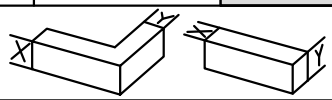

Aliver Rooflight

STANDARD ACCESSORIES

Image	Part Code	Pack	Unit	Application	Colour	
	ACSIL014 **Anti-Corrosion Coating**	**1**	**each**		MF	✓
					SA	
					KL	
					HP	
					SSC	
					SMC	
					W	
					Z	
					PC	
	ACUN3900 **Gasket Roller**	**1**	**each**		MF	
					SA	
					KL	
					HP	
					SSC	
					SMC	
					W	
					Z	
					PC	
					MF	
					SA	
					KL	
					HP	
					SSC	
					SMC	
					W	
					Z	
					PC	
					MF	
					SA	
					KL	
					HP	
					SSC	
					SMC	
					W	
					Z	
					PC	
					MF	
					SA	
					KL	
					HP	
					SSC	
					SMC	
					W	
					Z	
					PC	

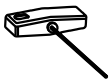

T-BARS
ACVG65=2.5mm
ACVG66=3.0mm
ACVL150=4.0mm

Screw (Grub)

MF = Mill Finish
SA = Silver Anodised
KL = Basic Colour
HP = Special Colour
SSC = Smooth Satin Chrome
SMC = Smokey Chrome
PC = Polished Chrome
W = White
Z = Black

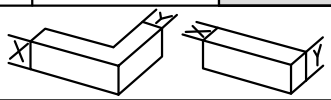

ISSUED : November 2022

Section C

Sections

Scale Elevations

Aliver Rooflight

Sections

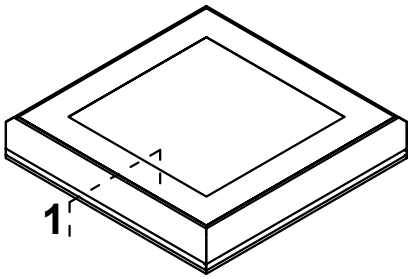

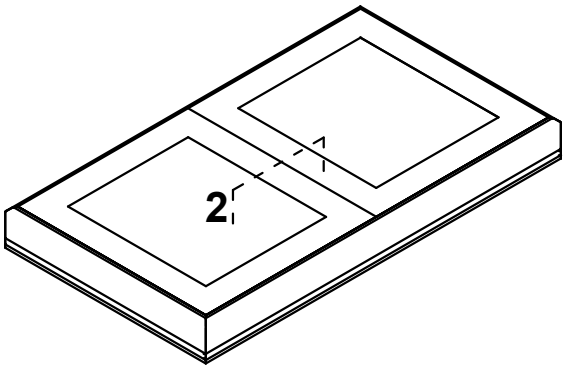

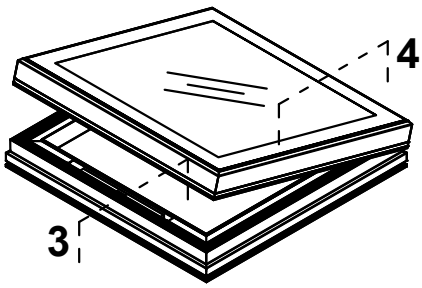

Do Not Scale From This Drawing

Aliver Rooflight

Detail 1A

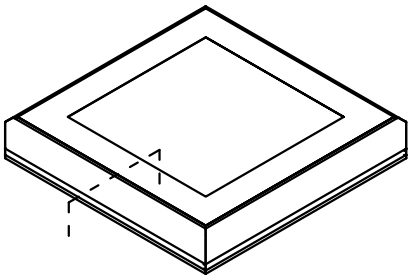

Note: A minimum of 15mm depth of ACUN3610 shall be used sealing glass to outer frame.

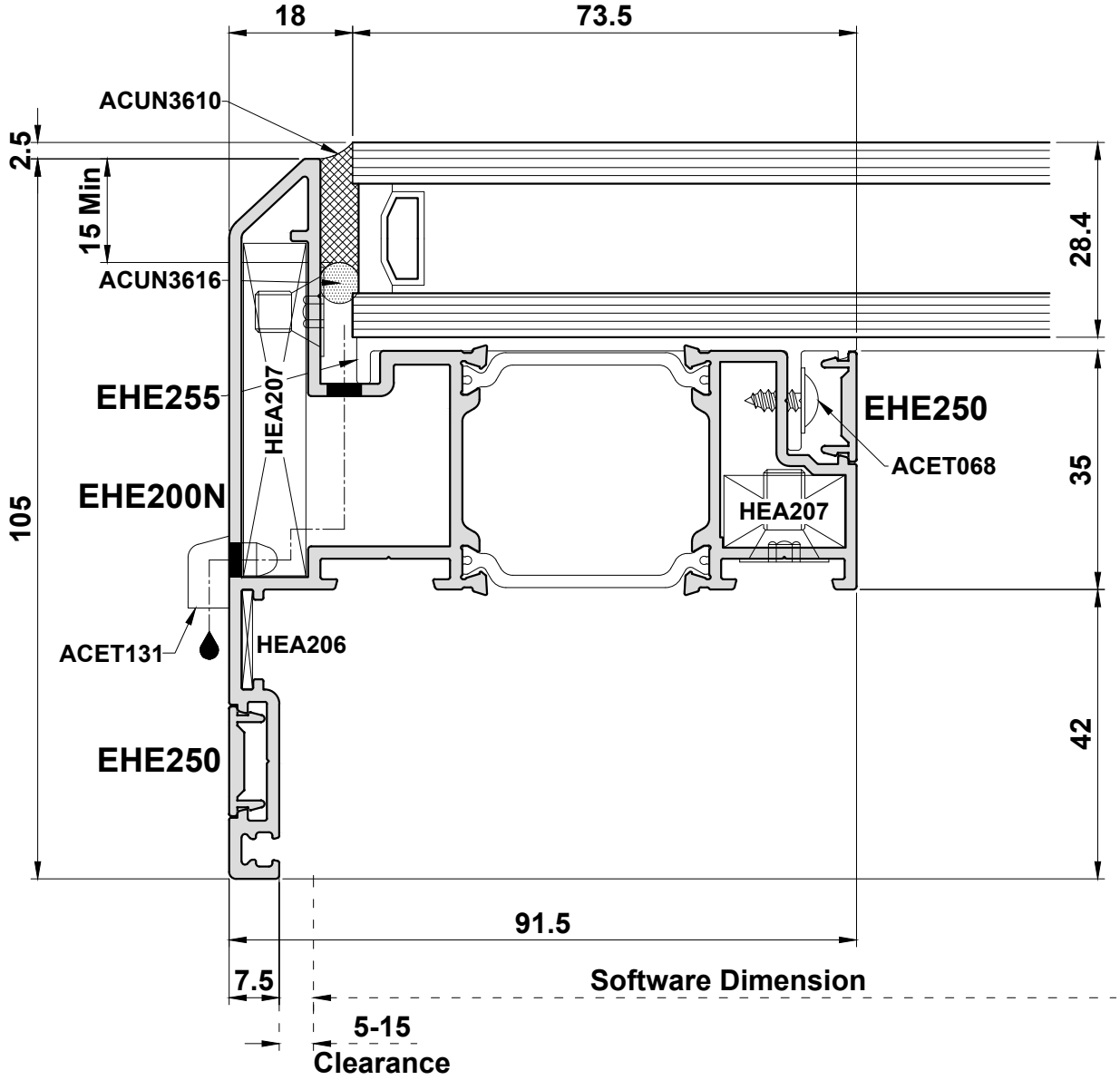

Do Not Scale From This Drawing

ISSUED : November 2022

Aliver Rooflight

Detail 1B

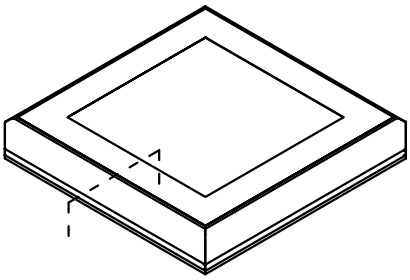

Note: A minimum of 15mm depth of ACUN3610 shall be used sealing glass to outer frame.

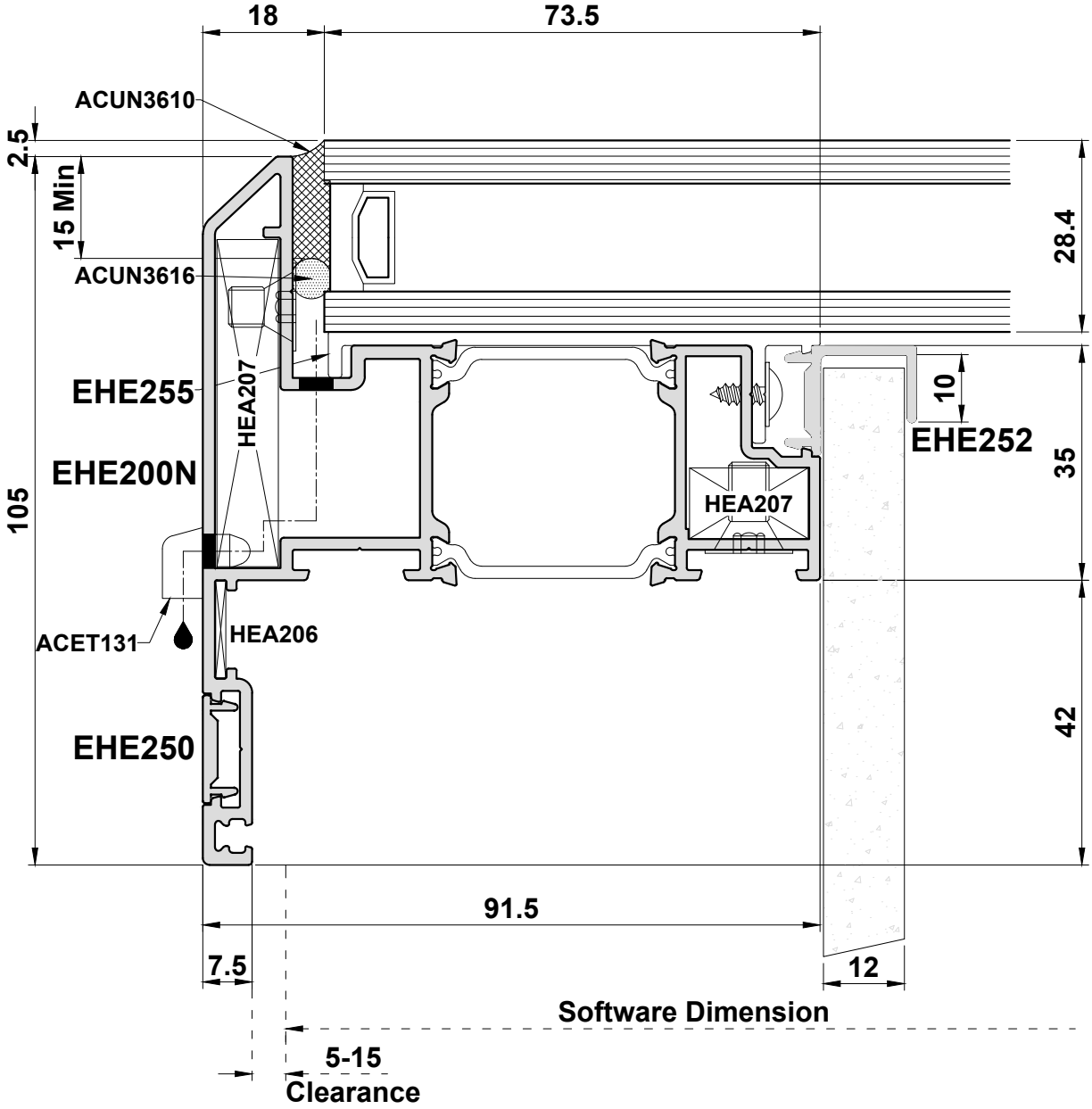

Do Not Scale From This Drawing

Aliver Rooflight

Detail 1C

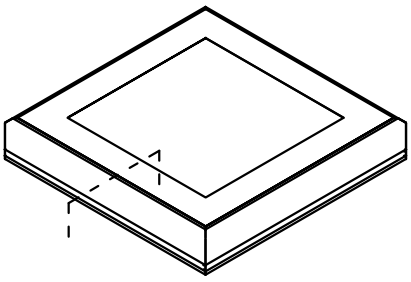

Note: A minimum of 15mm depth of ACUN3610 shall be used sealing glass to outer frame.

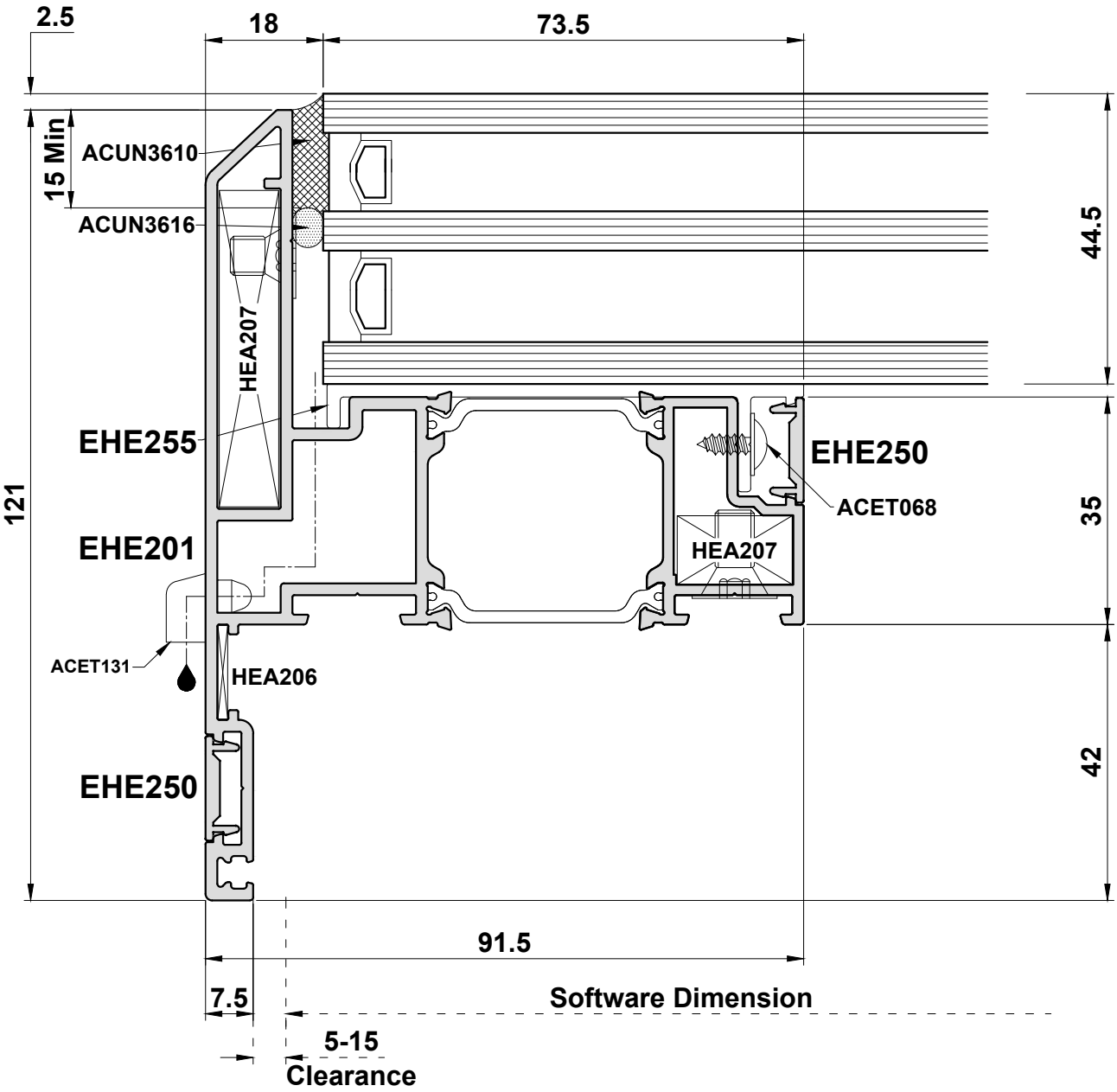

Do Not Scale From This Drawing

ISSUED : November 2022

Aliver Rooflight

Detail 1D

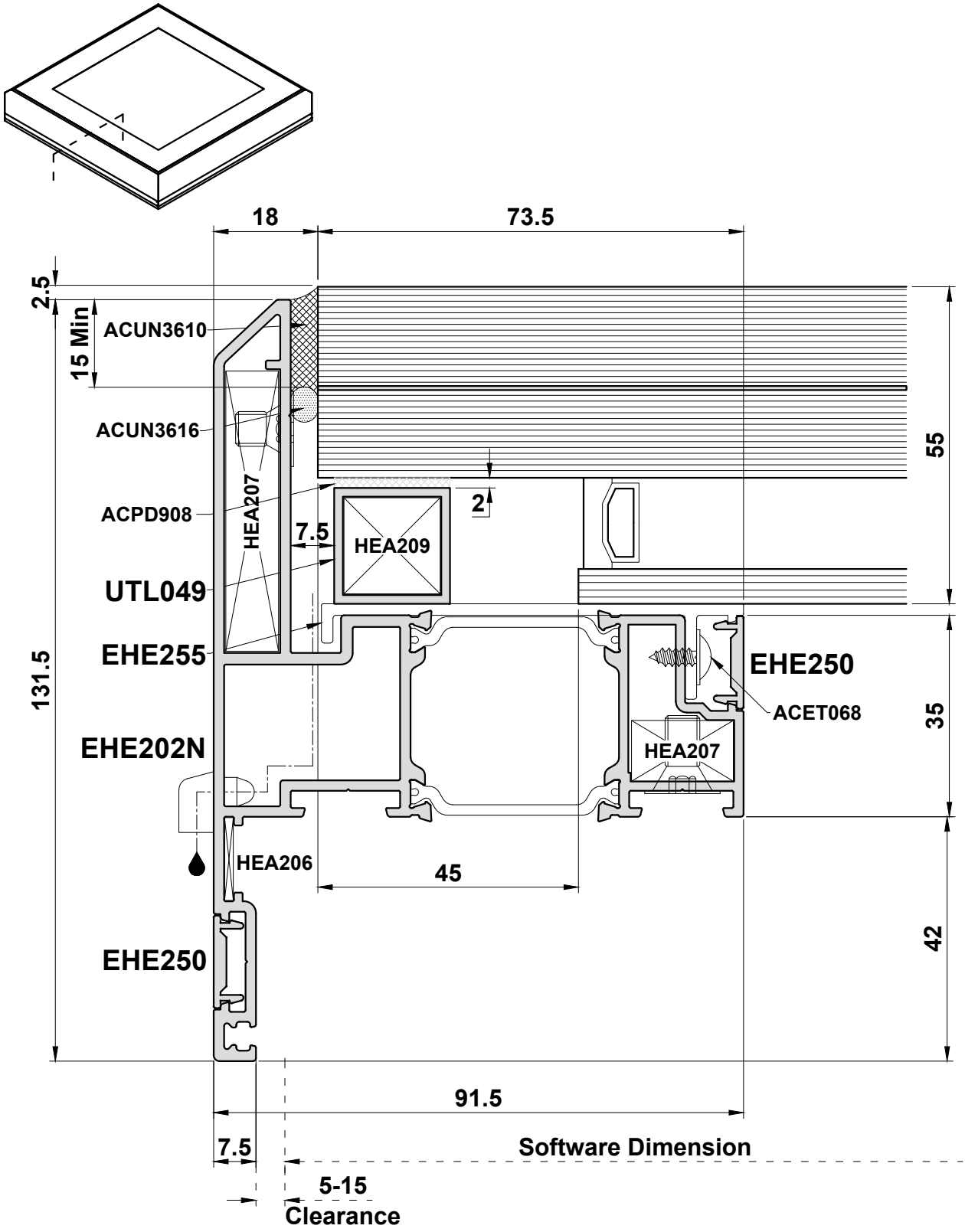

Do Not Scale From This Drawing

Aliver Rooflight

Detail 1E

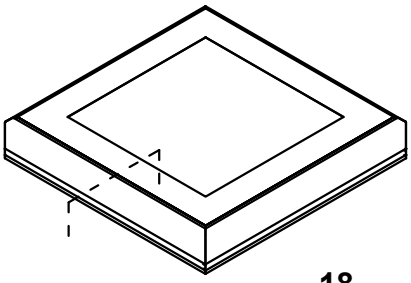

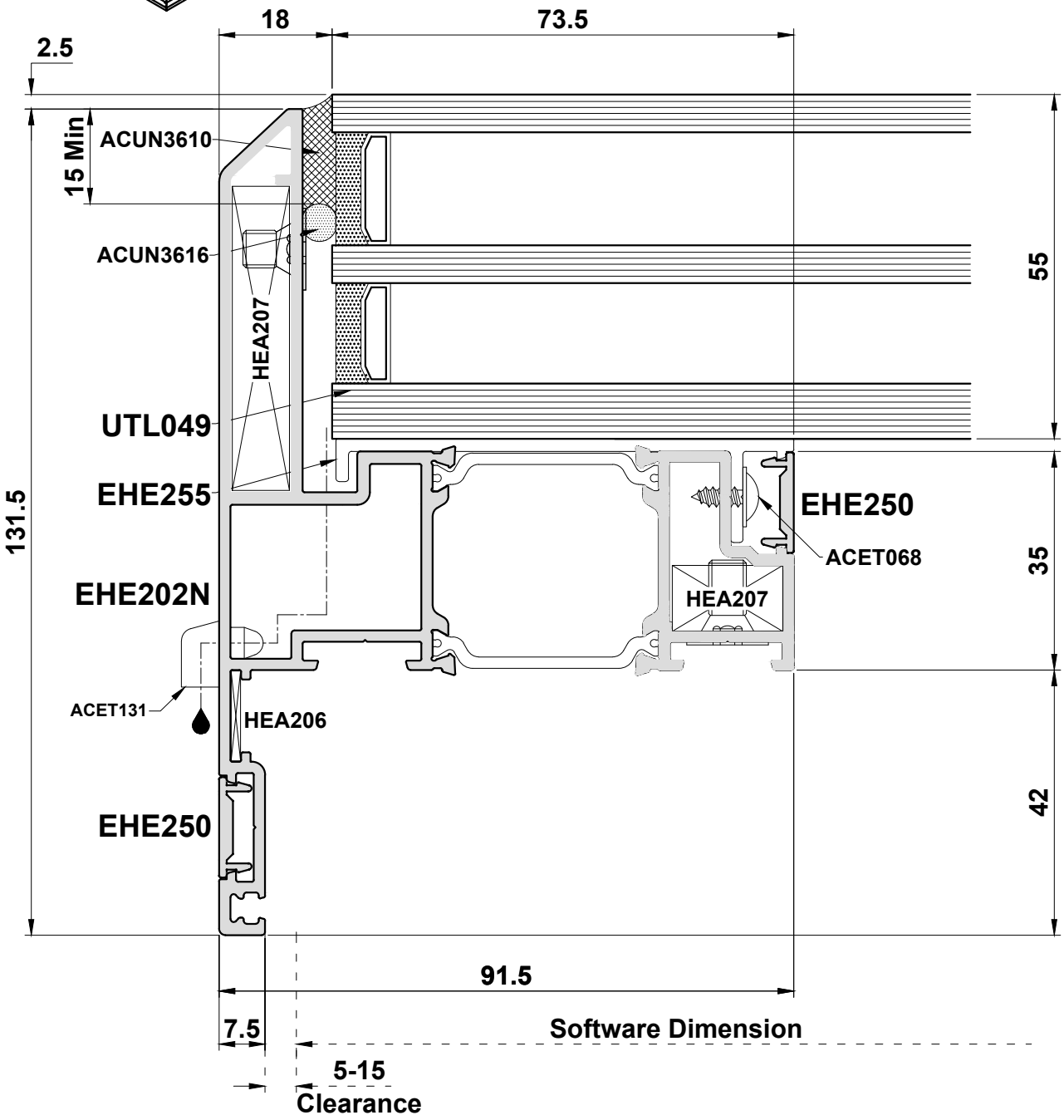

Do Not Scale From This Drawing

ISSUED : November 2022

Aliver Rooflight

Detail 2

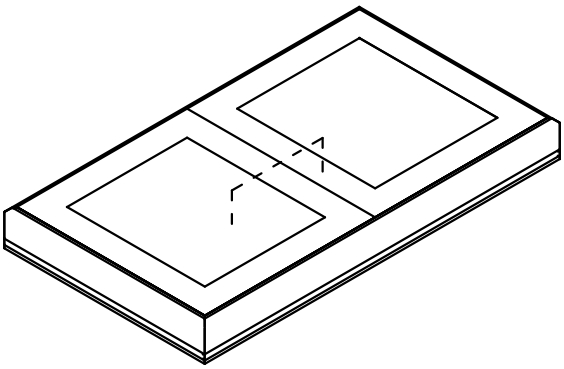

Note: A minimum of 15mm depth of ACUN3610 shall be used sealing glass

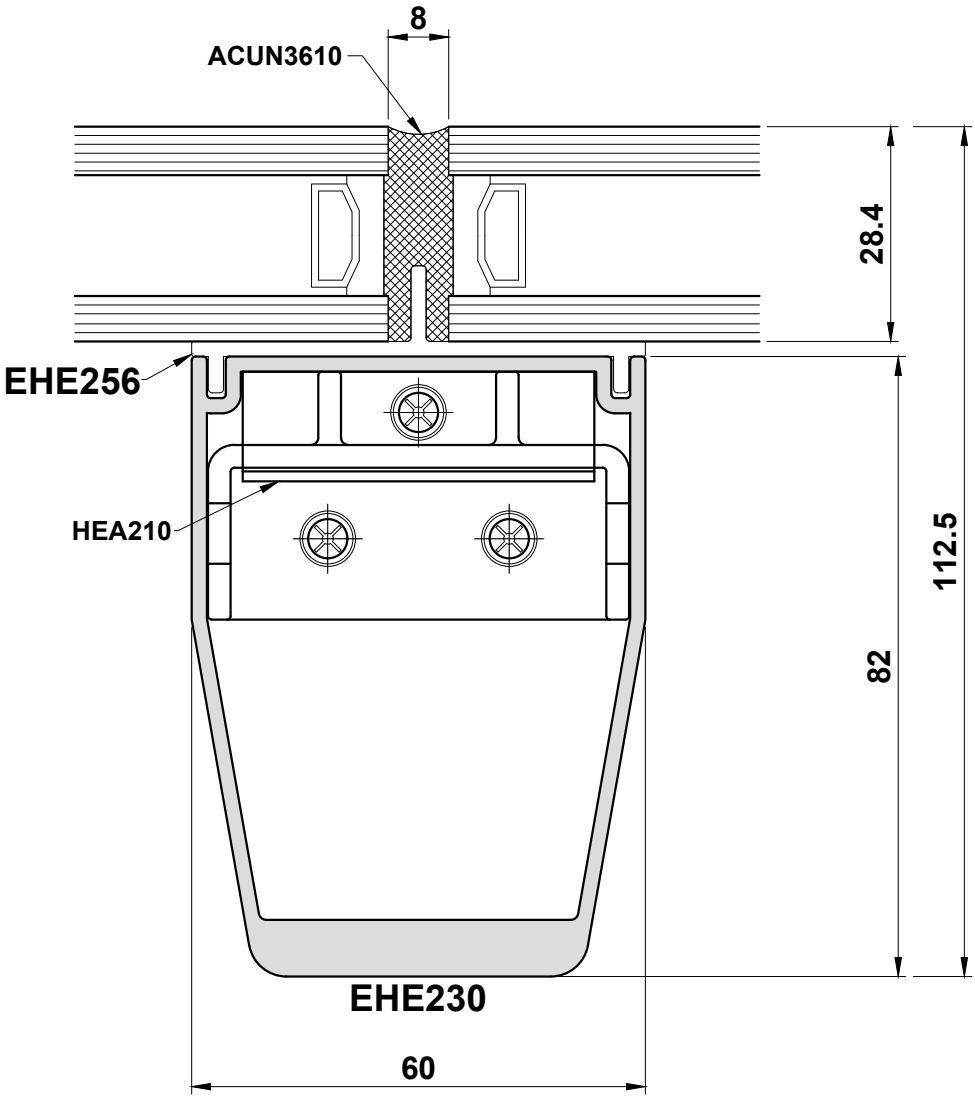

Do Not Scale From This Drawing

Aliver Rooflight

Detail 3A

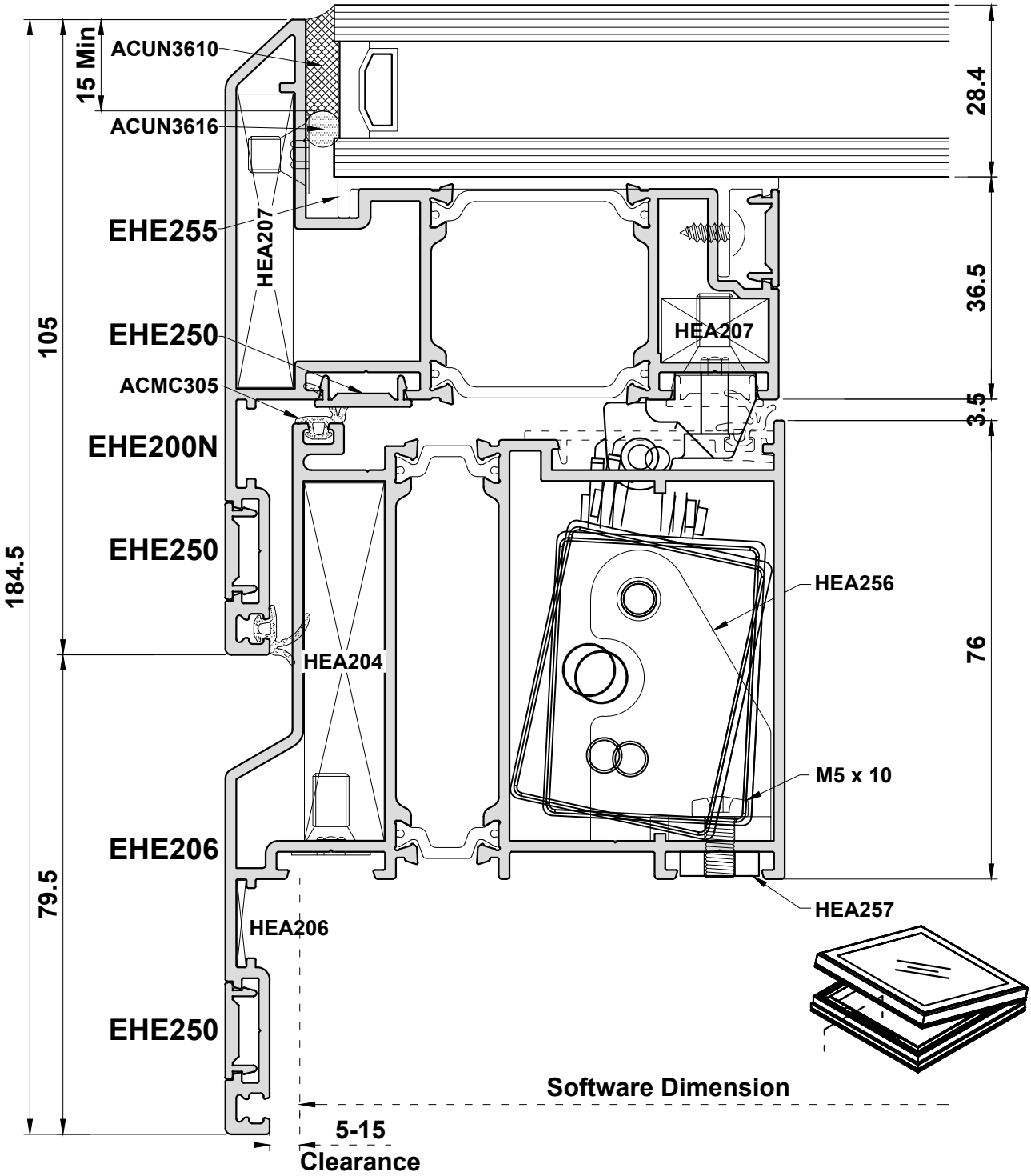

Do Not Scale From This Drawing

ISSUED : November 2022

Detail 3B

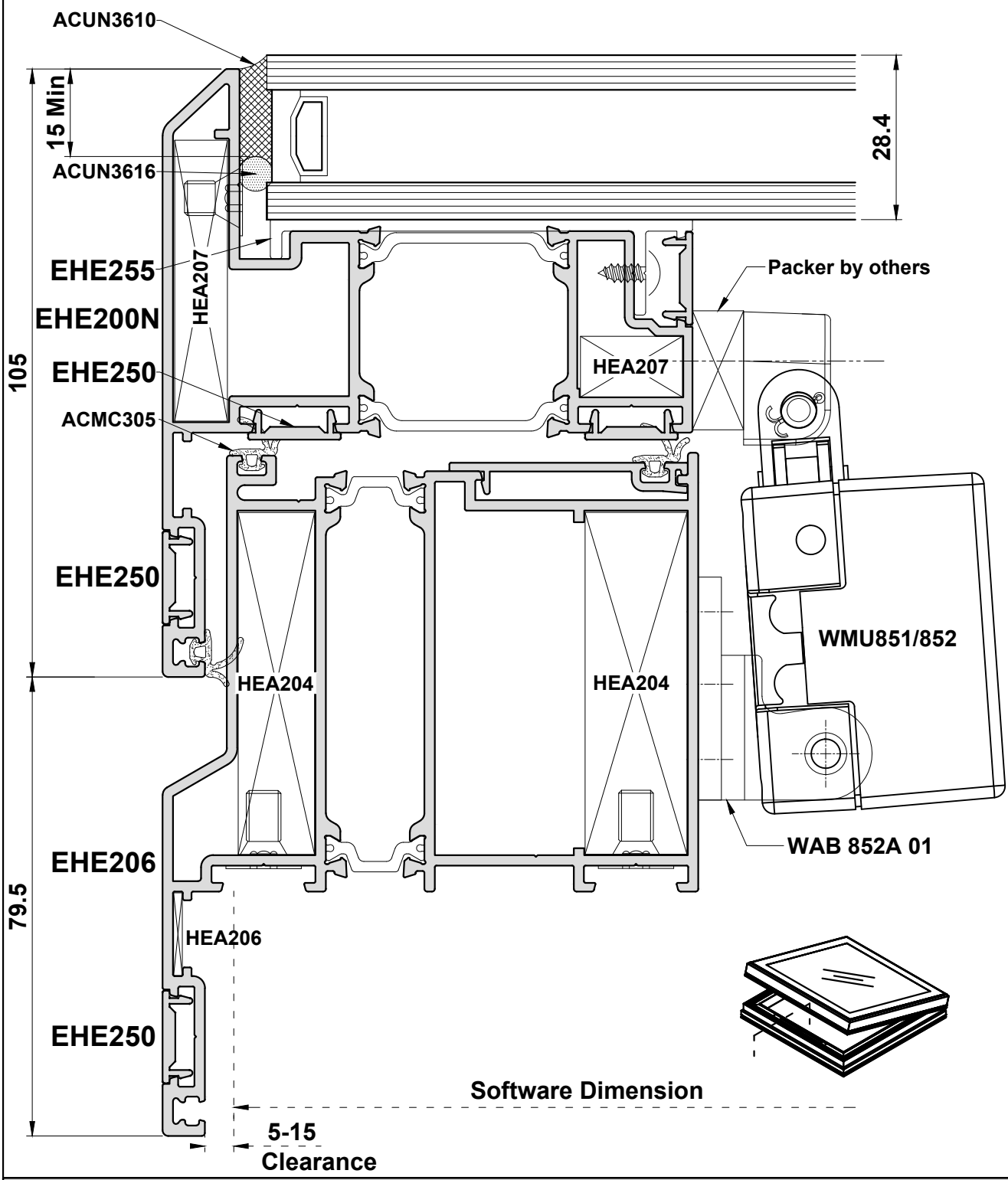

Do Not Scale From This Drawing

Aliver Rooflight

Detail 4

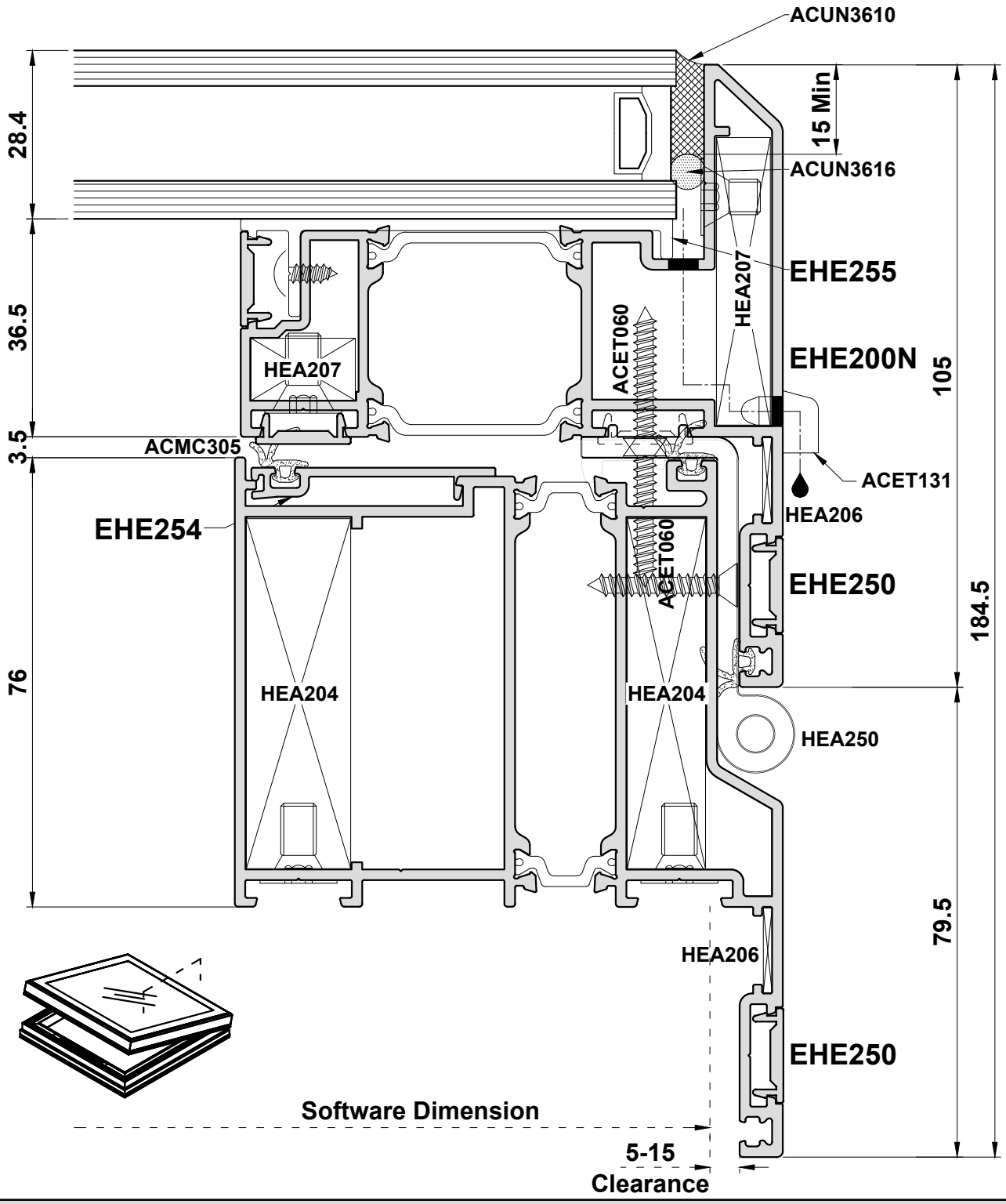

Do Not Scale From This Drawing

ISSUED : November 2022

Section D

Statics

General Size Limitations are shown on Page A03.

For Wind Loading Limitations, Please Contact
The Technical Department - T: 01934 876100

Section D

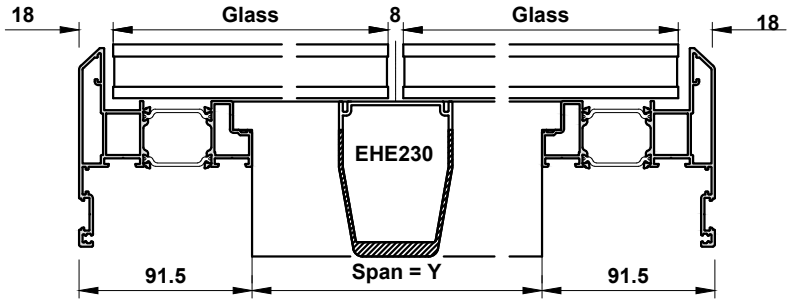

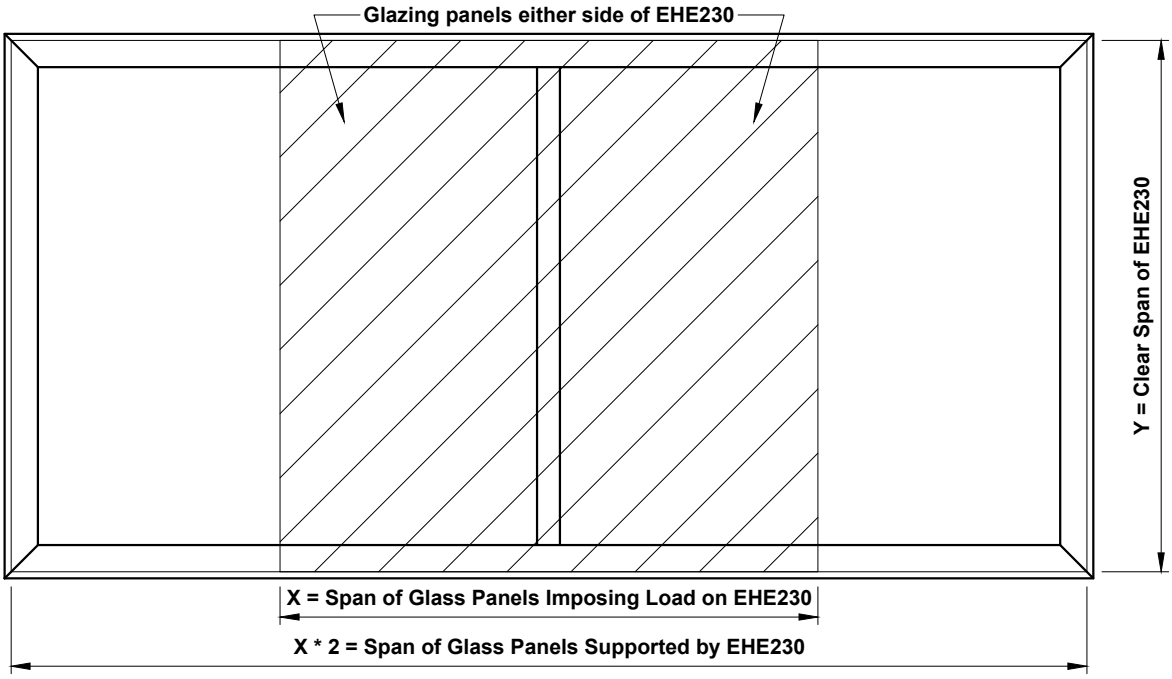

EHE230 Span	Maximum Glass Sizes	
Y (mm)	X (mm)	X * 2 (mm)
<1800	3175	6350
1801-1900	2800	5600
1901-2000	2400	4800
2001-2100	2100	4200
2101-2200	1850	3700
2201-2300	1625	3250
2301-2400	1420	2840
2401-2500	1260	2520
2501-2600	1130	2260
2601-2700	1000	2000
2701-2800	900	1800
2801-2900	800	1600
2901-3000	700	1400

Important Notes:
1. Deflection limited to L/175
2. The above limits are for EHE230 only. The glazing unit design limits must be confirmed by others.
3. The adjacent rooflight glazing is securely fixed around the perimeter as specified in this manual.
4. Loading consistent design parameters:
a) The maximum potential loading case is dead (0.35kN/m²) + imposed (0.75kN/m²) (therefore wind uplift is not covered).
b) Dead load is from 6.8mm laminate + 6mm toughened glazing = 0.35kN/m².
c) Maximum imposed (snow) load is 0.75kN/m².
d) Maximum aperture height above ground = 3m.
e) Maximum site altitude = 100m above ordinance datum
5. The Rooflight will be located within a flat roof with access maintenance only.

Section E

E EHE

Construction Drawings

Corner Joint Details..... E03 - E04
Drainage Details..... E05
Sealing Glass Unit..... E06
Walk On Roof Assembly..... E07
Intermediate Mullion..... E08
Typical Installation Details..... E09
Kerb Sizes..... E10 - E11
Opening Vent Details..... E12 - E17

EHE200N Corner Joint Details

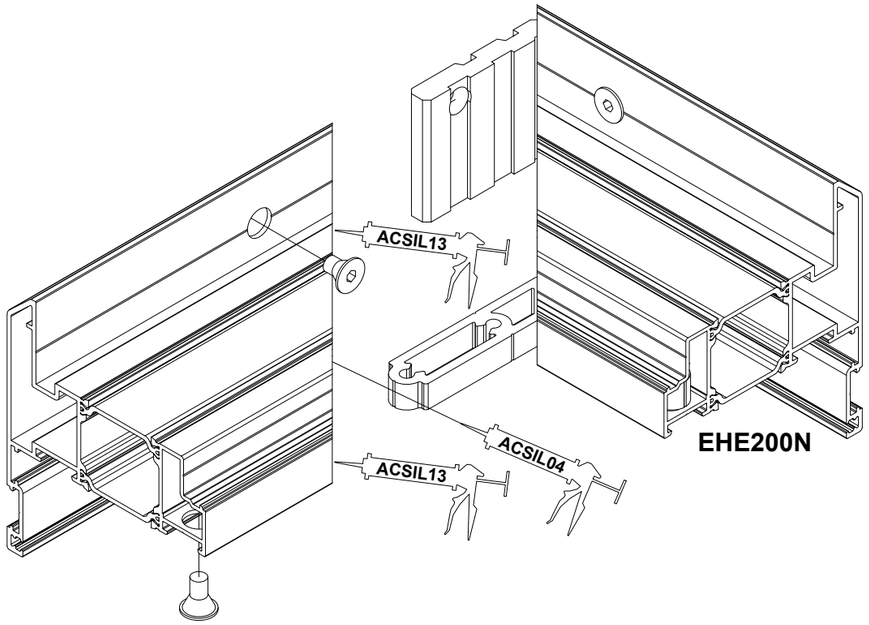

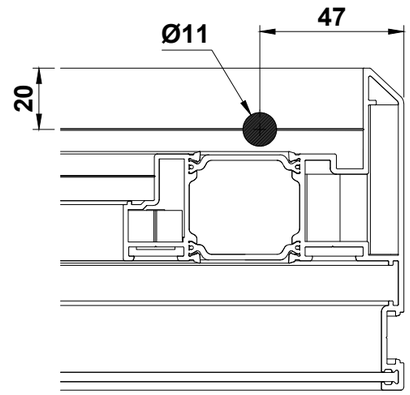

EHE200N

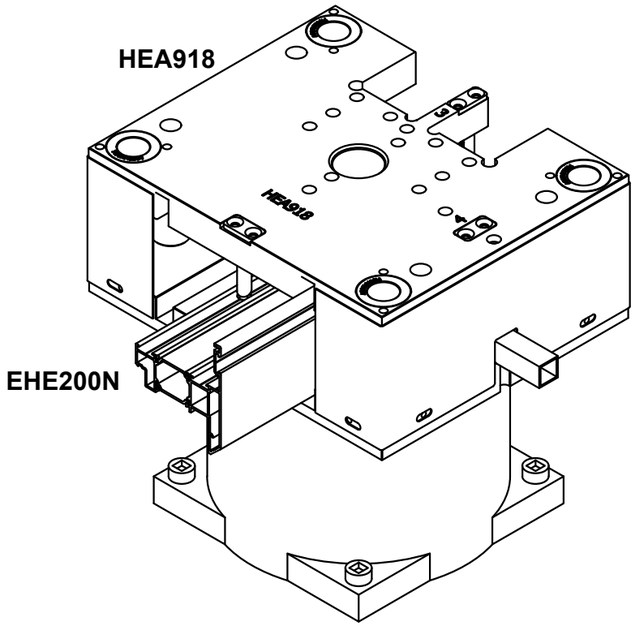

EHE200N

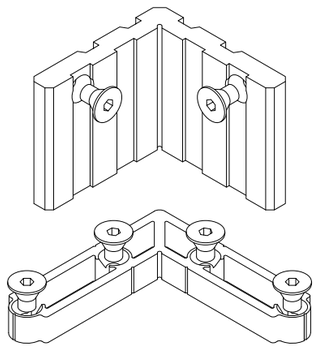

HEA207 Kit

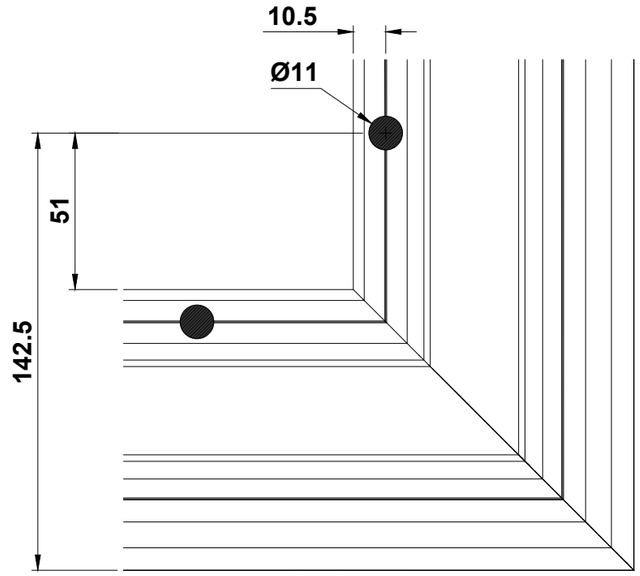

EHE200N

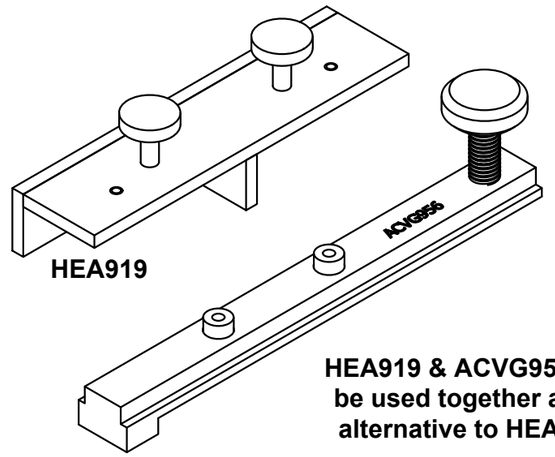

HEA919

ACVG956

HEA919 & ACVG956 can be used together as an alternative to HEA918.

Do Not Scale From This Drawing

EHE201 & EHE202N Corner Joint Details

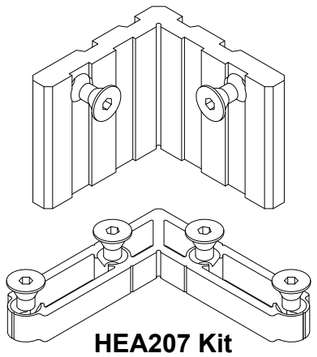

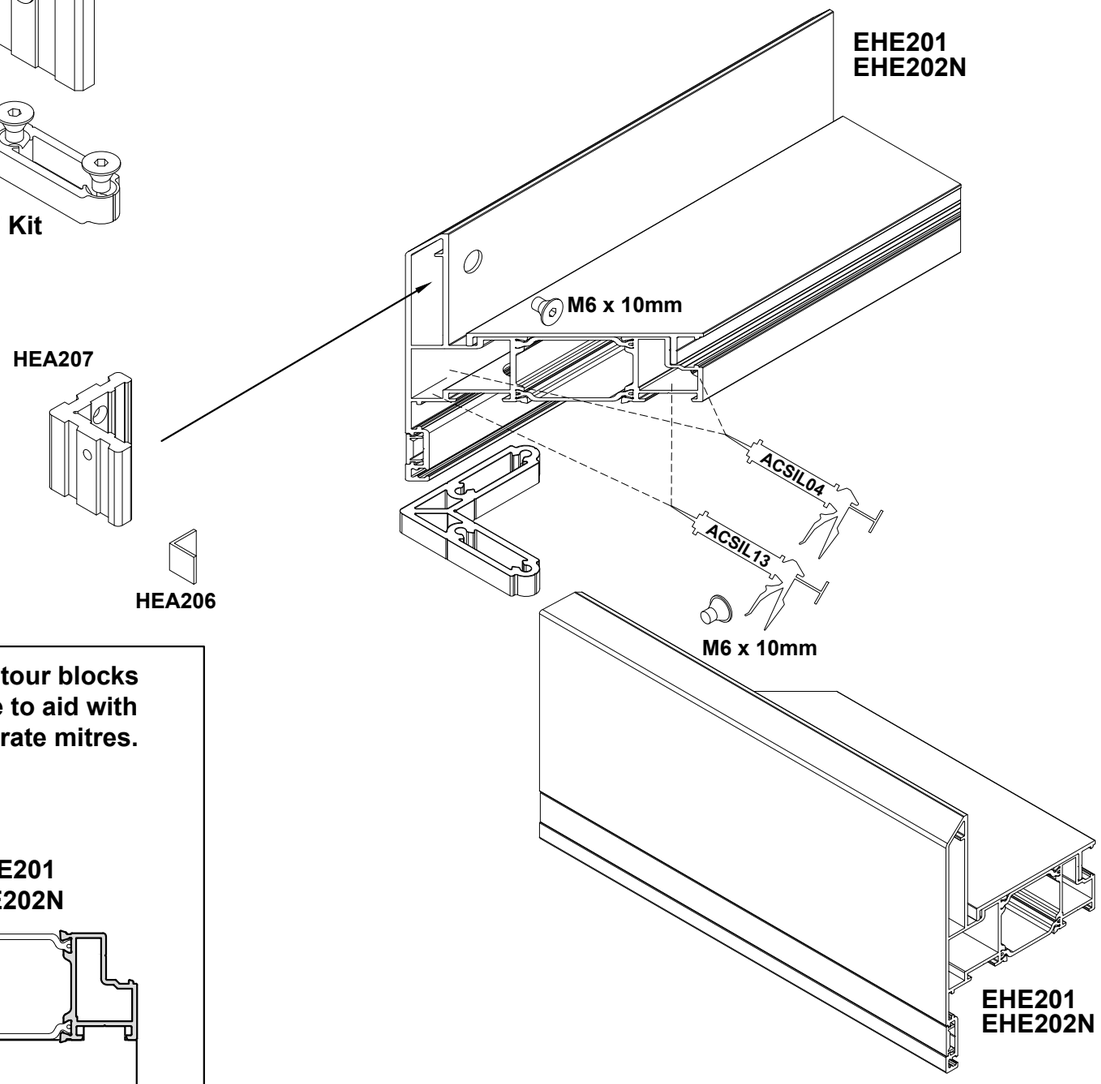

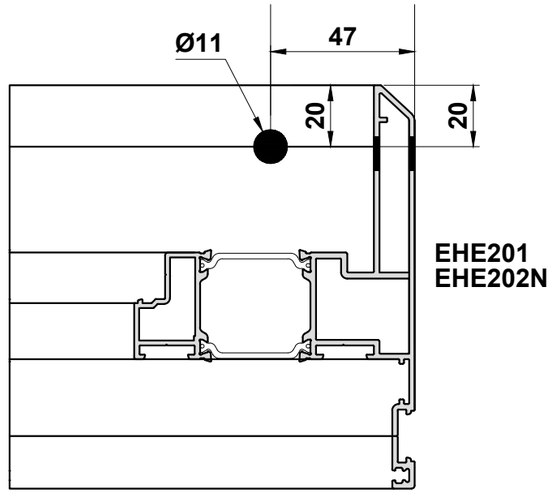

Note: HEA918 punch tool can be used

HEA290 Contour blocks are available to aid with cutting accurate mitres.

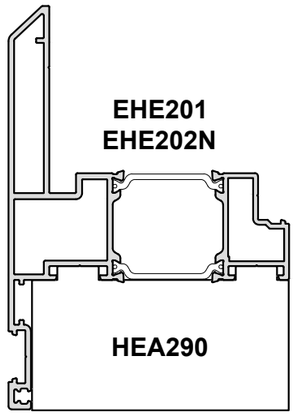

Note: HEA918 punch tool can be used

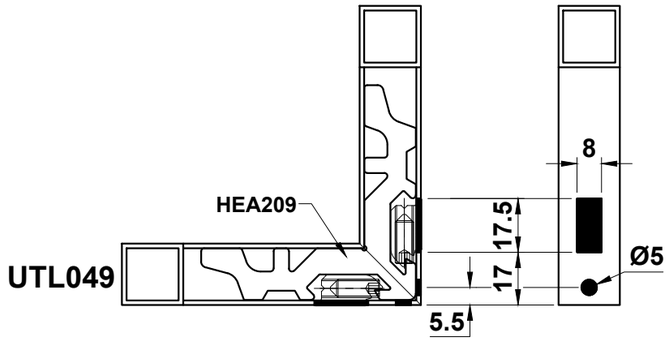

Do Not Scale From This Drawing

Drainage Details

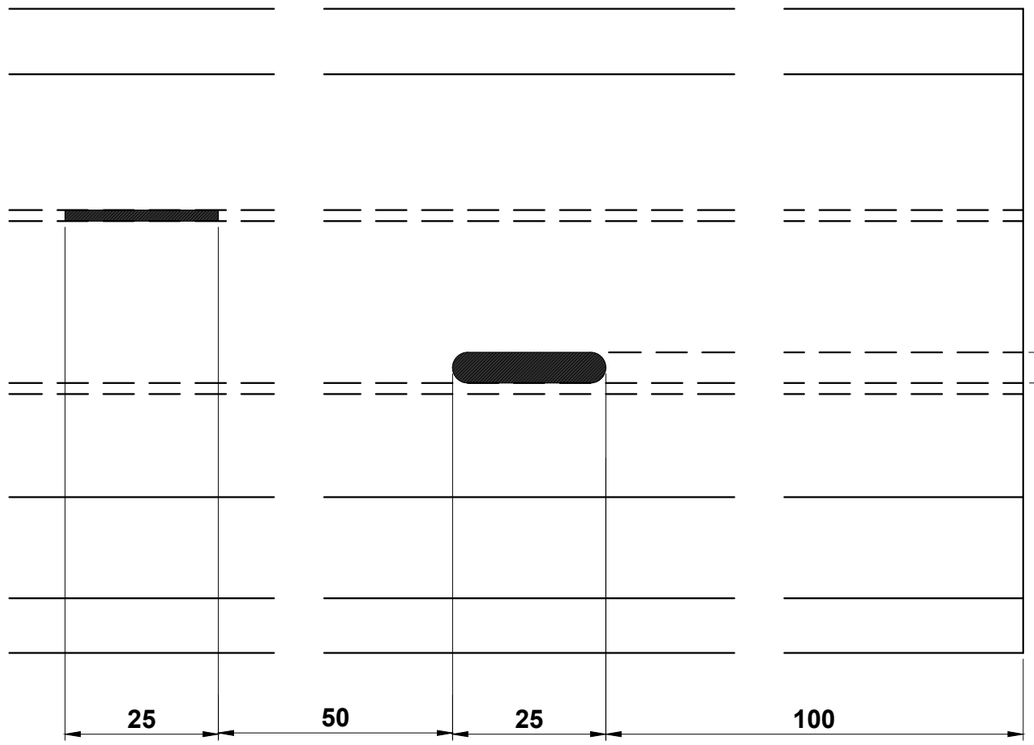

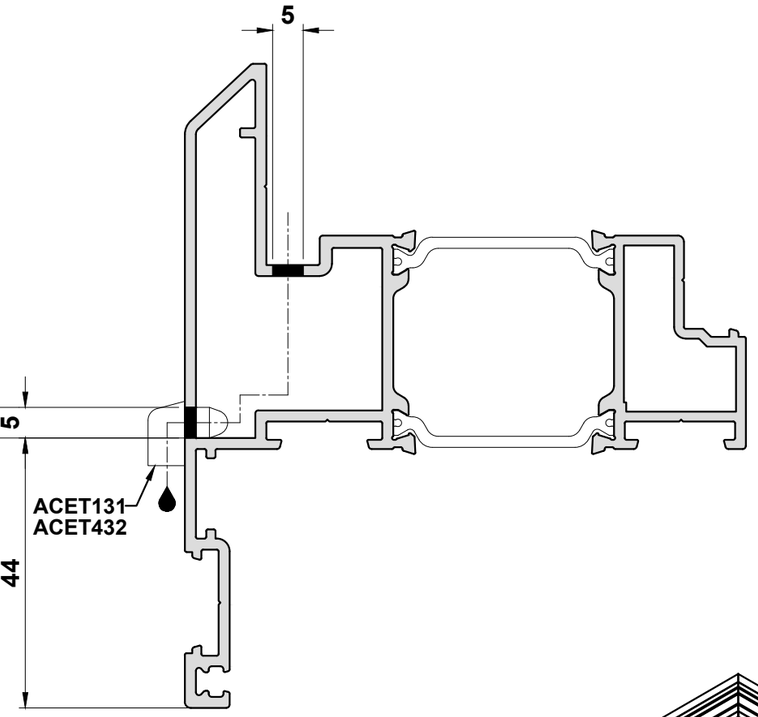

Important Note: All exposed aluminium should be coated using ACSIL014 or painted to match the frame.

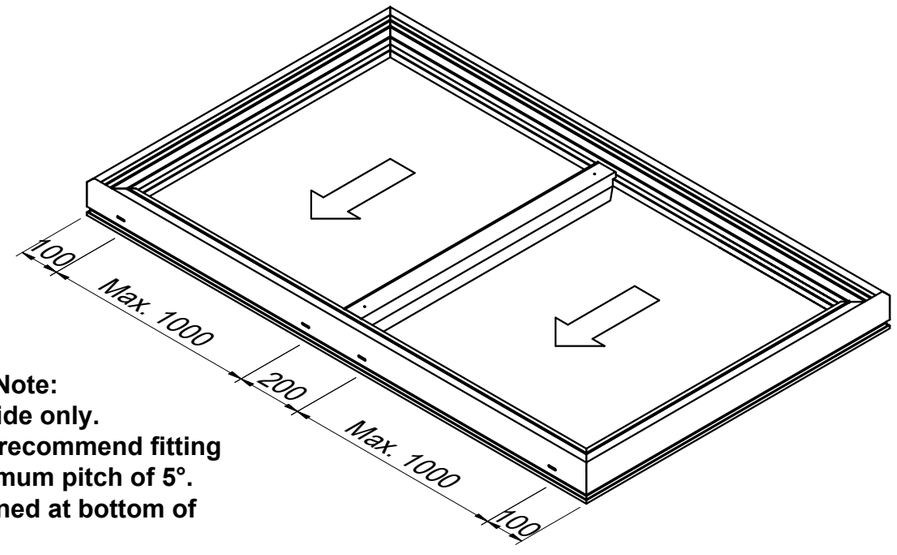

Important Note:
Drain to one side only.
To aid water run off, we recommend fitting the rooflight at a minimum pitch of 5°.
Drainage to be positioned at bottom of pitch.

Do Not Scale From This Drawing

Sealing Glass Unit

ACUN3610 is a high quality single component adhesive that provides a strong bond between the Butyl sealed unit and frame.

We recommend glazing the frame in the workshop at least a day before installation so it can be allowed to set.

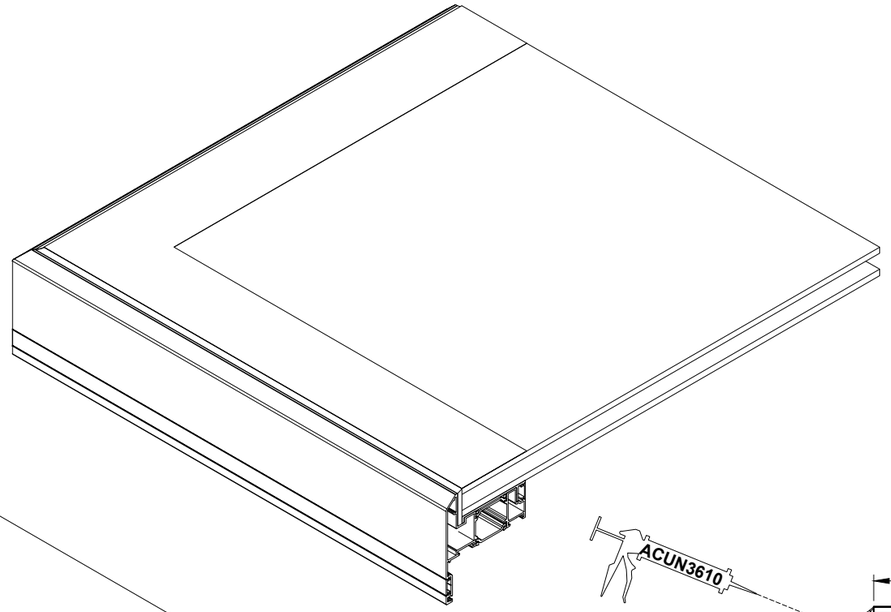

Bonding:

After preparation, apply a small, continuous bead of ACUN3610 single component sealant on top of the EHE255 glass support and place glass into position.

Apply ACUN3610 single component sealant into gap between frame and glass as detailed below (Detail A).

ACUN3610 must be applied to the entire perimeter of the unit.

A clamp should be used to ensure the glass is held flat while ACUN3610 sets.

Leave to set overnight.

Important Note:
Glass unit must be sealed with Butyl & without tape. Please liaise with your glass supplier regarding the application.

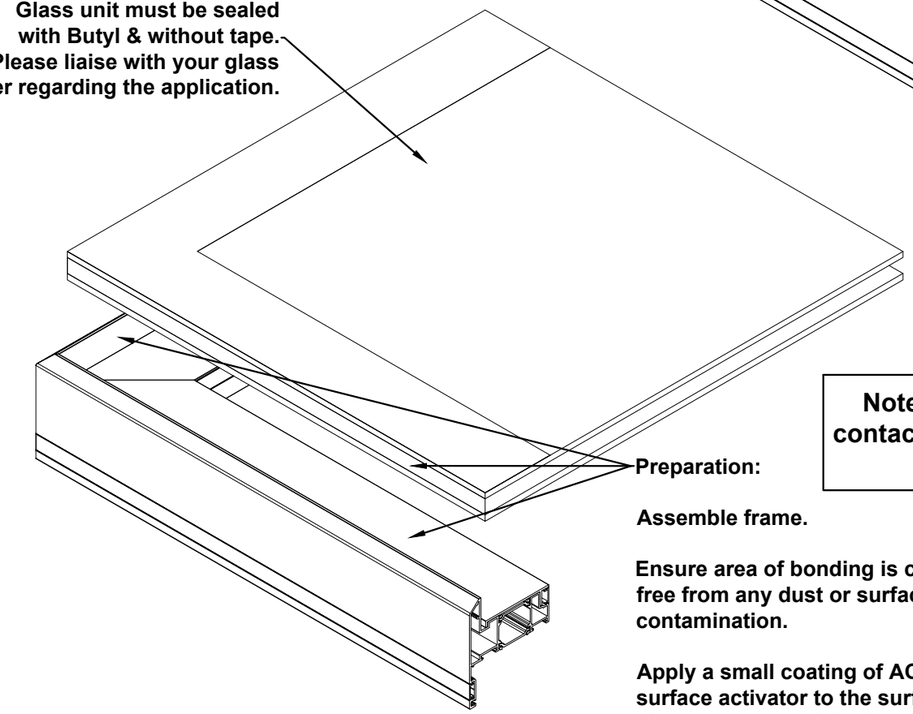

Preparation:

Assemble frame.

Ensure area of bonding is clean, dry and free from any dust or surface contamination.

Apply a small coating of ACUN3612 surface activator to the surface of the glass support and the bond area of the glass only. Allow to dry, leaving a slight residue.
Take care not to apply ACUN3612 to any visible surfaces.

Note: ACUN3612 must make good contact with unit sealant and left for 48 hours to cure.

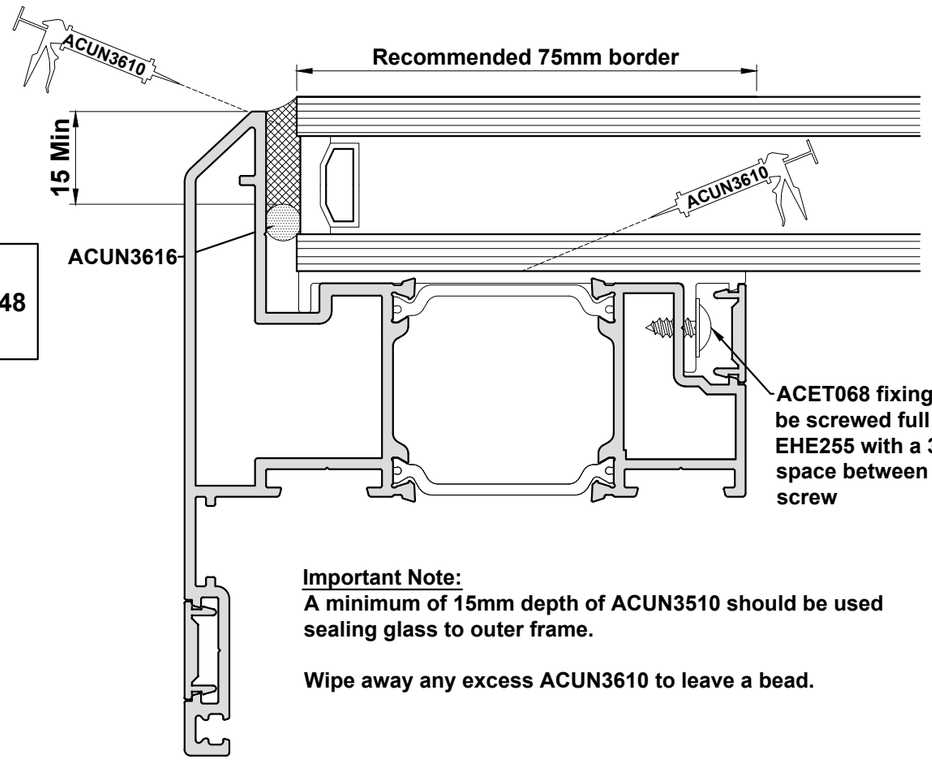

ACET068 fixing should be screwed full length of EHE255 with a 300mm space between each screw

Important Note:
A minimum of 15mm depth of ACUN3510 should be used sealing glass to outer frame.

Wipe away any excess ACUN3610 to leave a bead.

Do Not Scale From This Drawing

EHE202 Walk On Roof Assembly

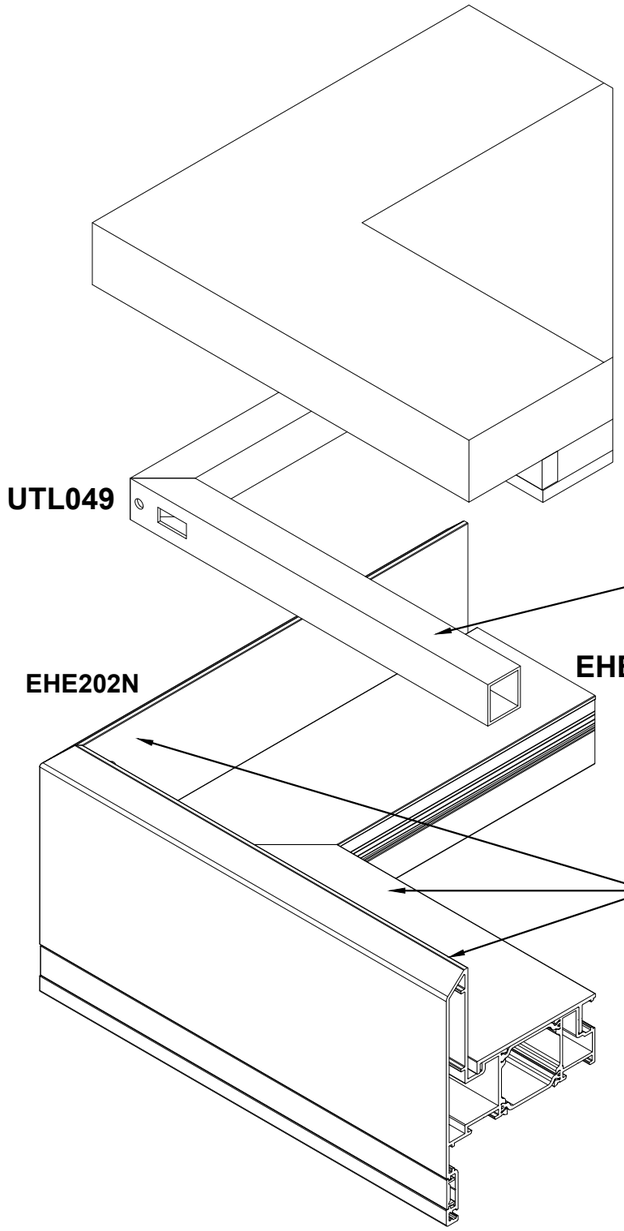

Apply ACPD908 tape to top side of UTL049 & bond to EHE255 using ACUN3610

Note: ACUN3612 must make good contact with unit sealant and left for 48 hours to cure.

Preparation:

Assemble frame.

Ensure area of bonding is clean, dry and free from any dust or surface contamination.

Apply a small coating of ACUN3612 surface activator to the surface of the glass support and the bond area of the glass only. Allow to dry, leaving a slight residue.
Take care not to apply ACUN3612 to any visible surfaces.

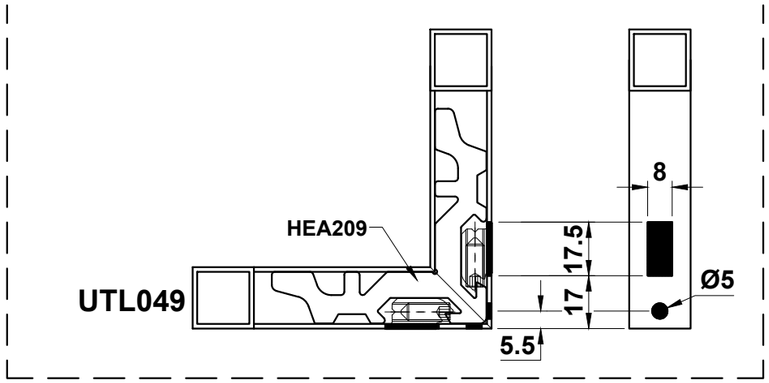

Bonding:

After preparation, apply a small, continuous bead of ACUN3610 single component sealant on top of the EHE255 glass support and place glass into position.

Apply ACUN3610 single component sealant into gap between frame and glass as detailed below (Detail A).

ACUN3610 must be applied to the entire perimeter of the unit.

A clamp should be used to ensure the glass is held flat while ACUN3610 sets.

Leave to set overnight.

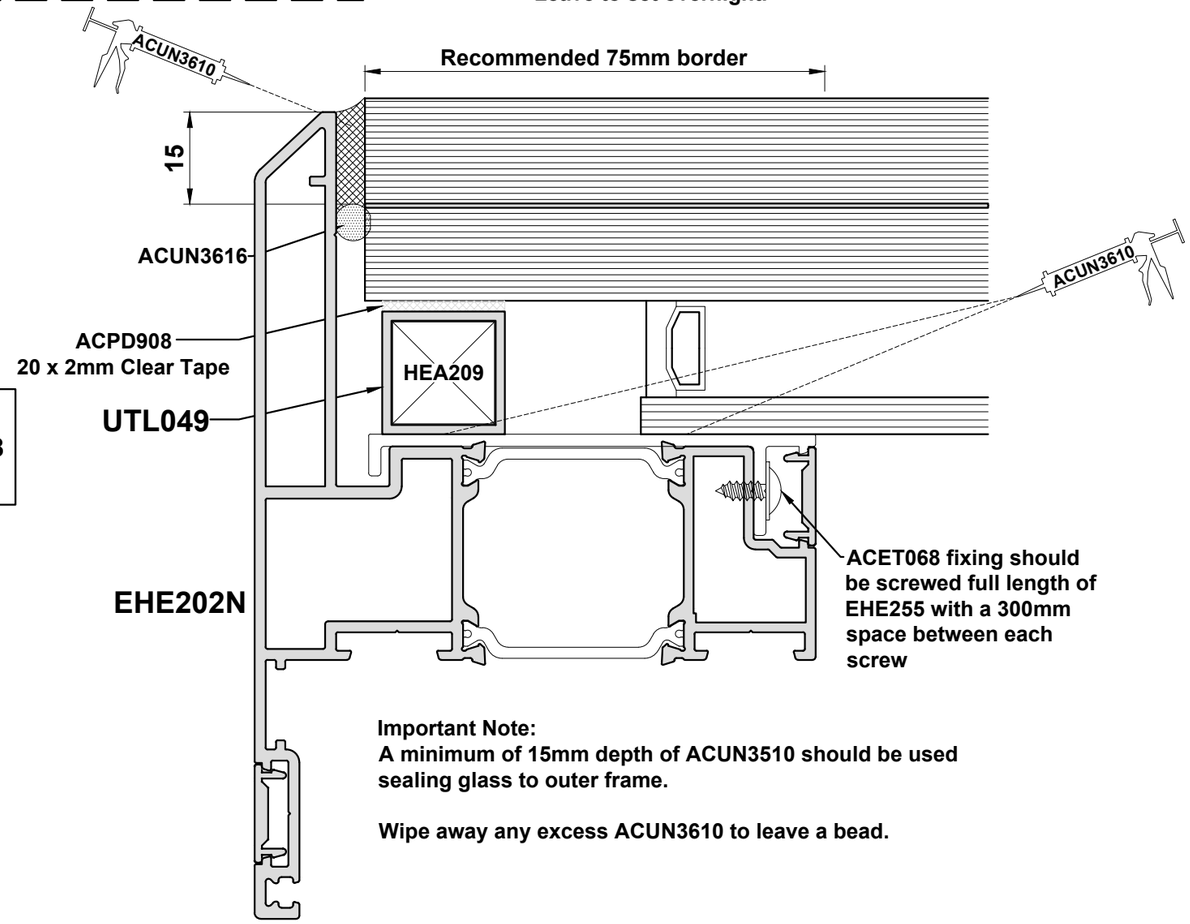

Important Note:
A minimum of 15mm depth of ACUN3510 should be used sealing glass to outer frame.

Wipe away any excess ACUN3610 to leave a bead.

Do Not Scale From This Drawing

Intermediate Mullion

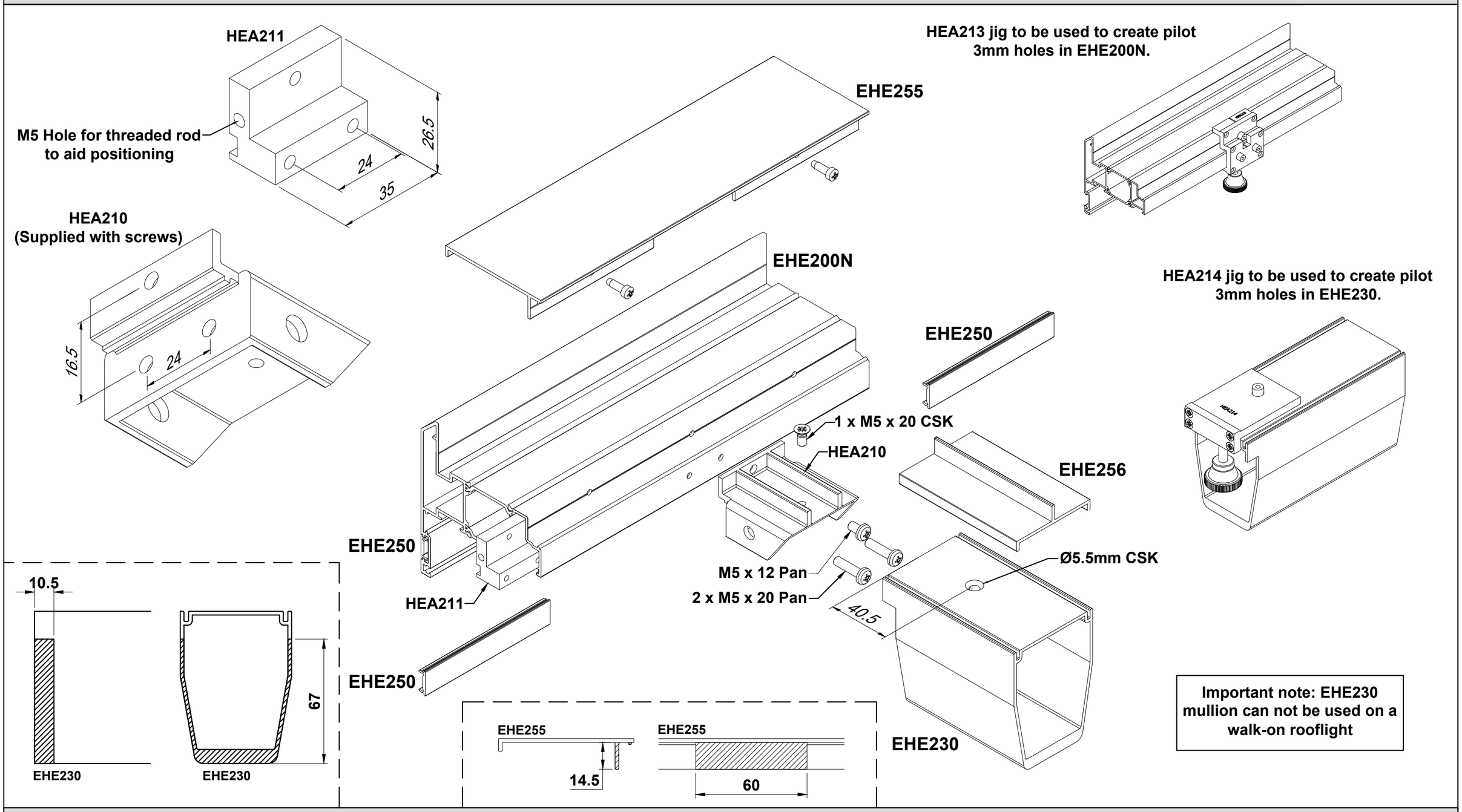

Do Not Scale From This Drawing

ISSUED : November 2022

Typical Installation Detail

Methods of Fixing

1. Fix roof from inside using ACUN232 or ACUN233 fixing straps at 100mm from each corner and at 300mm max centres. This is the recommended option.
2. Fix roof from the outside using anti-tamper screws suitable for the building substrate 100mm in from each end then at 300mm max centres.

Important Note:
To aid water run off, we recommend all rooflights are fitted at a minimum pitch of 5°.

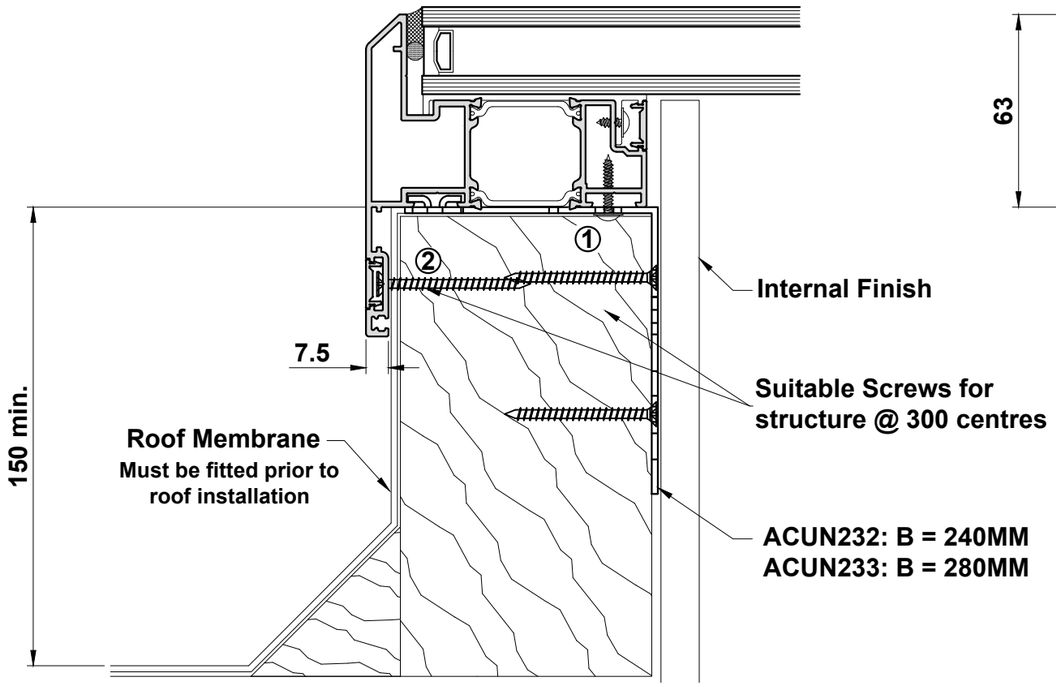

Inside View

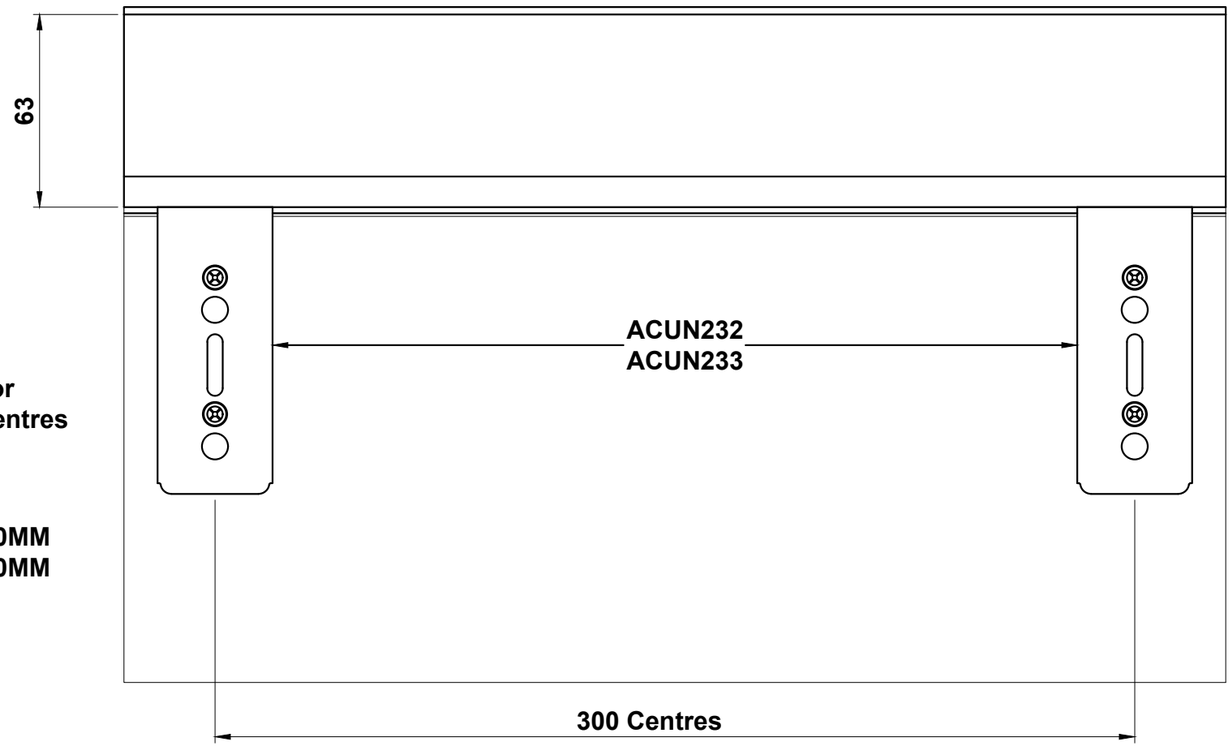

Kerb Sizes

Option A - Plasterboard to glass from internal face of kerb

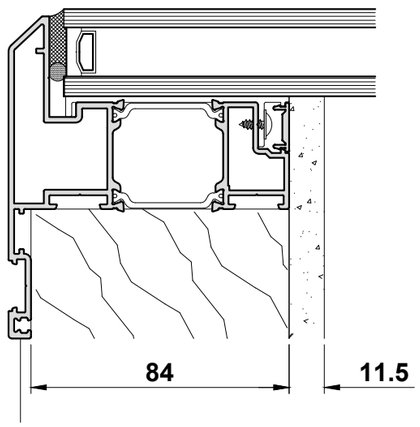

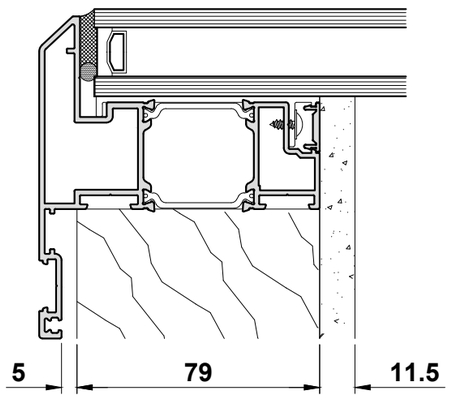

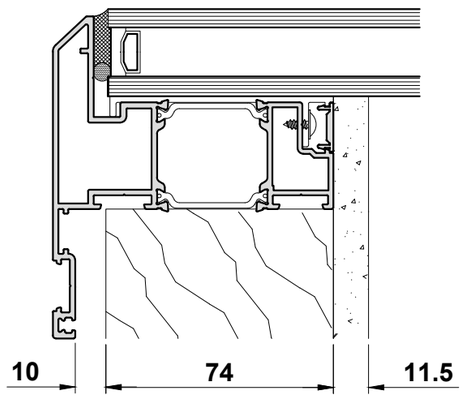

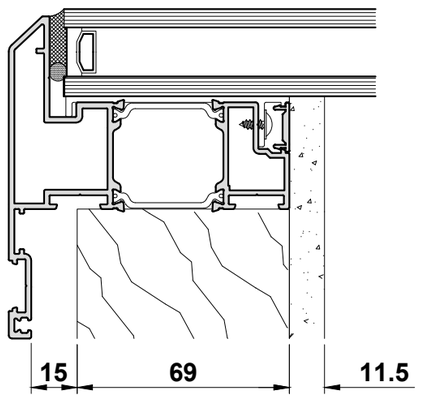

Option B - Plasterboard to EHE252 (plasterboard cap)

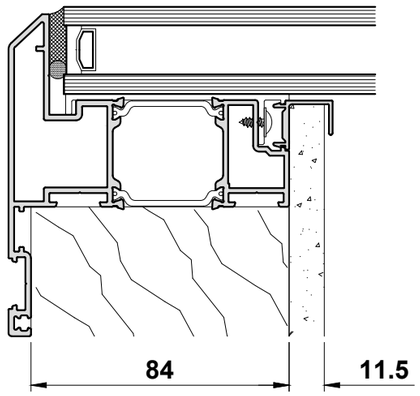

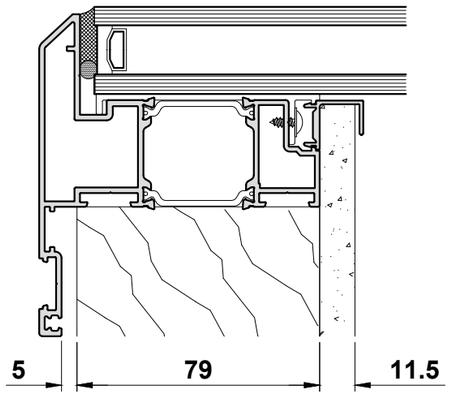

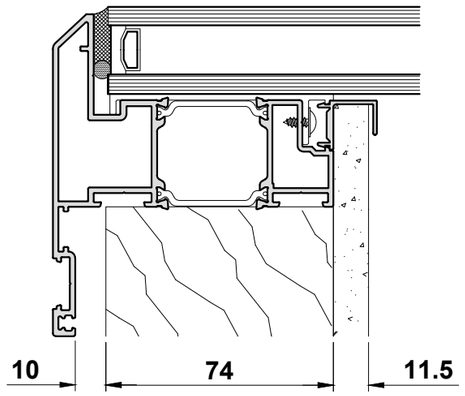

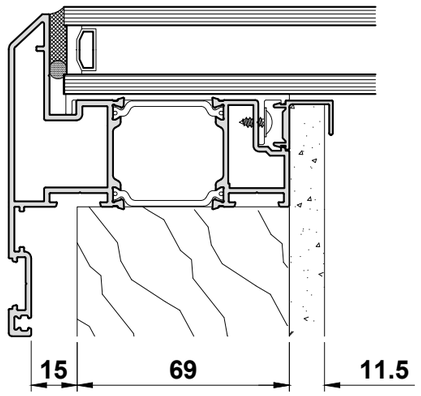

Do Not Scale From This Drawing

Kerb Sizes Continued

Option C - Plasterboard flush with inside edge of roof light.

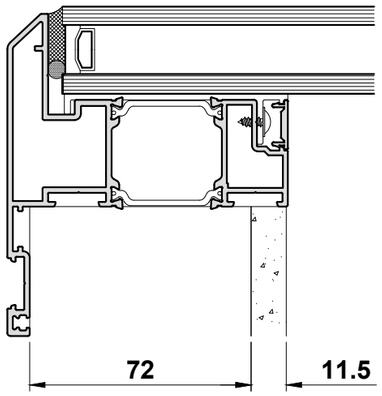

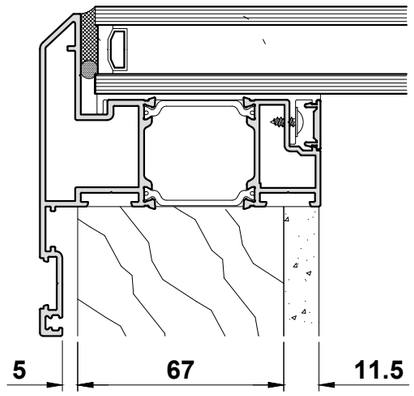

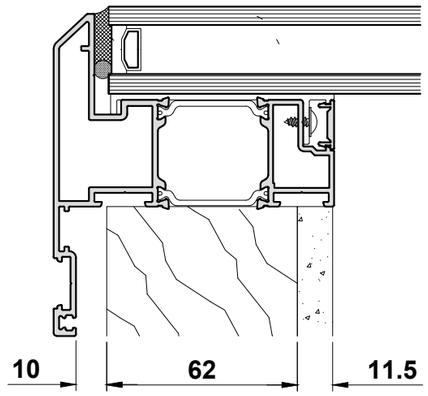

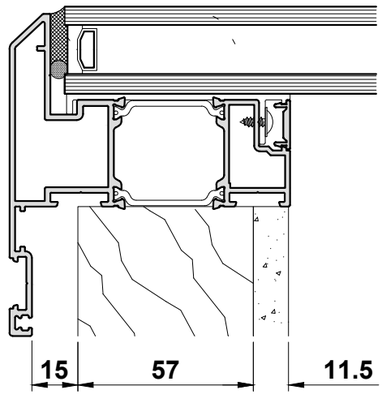

Option A & B will restrict access to the fixing of the PVC.

All drawings show an allowance of 11.5mm for plaster board (9.5mm plasterboard and 2mm plaster) you need to adjust this if using 12.5mm plasterboard.

Please note: the sizes that are entered into the fabrication software are the tight external kerb dimensions. An allowance option can then be selected.

EHE206 Corner Assembly

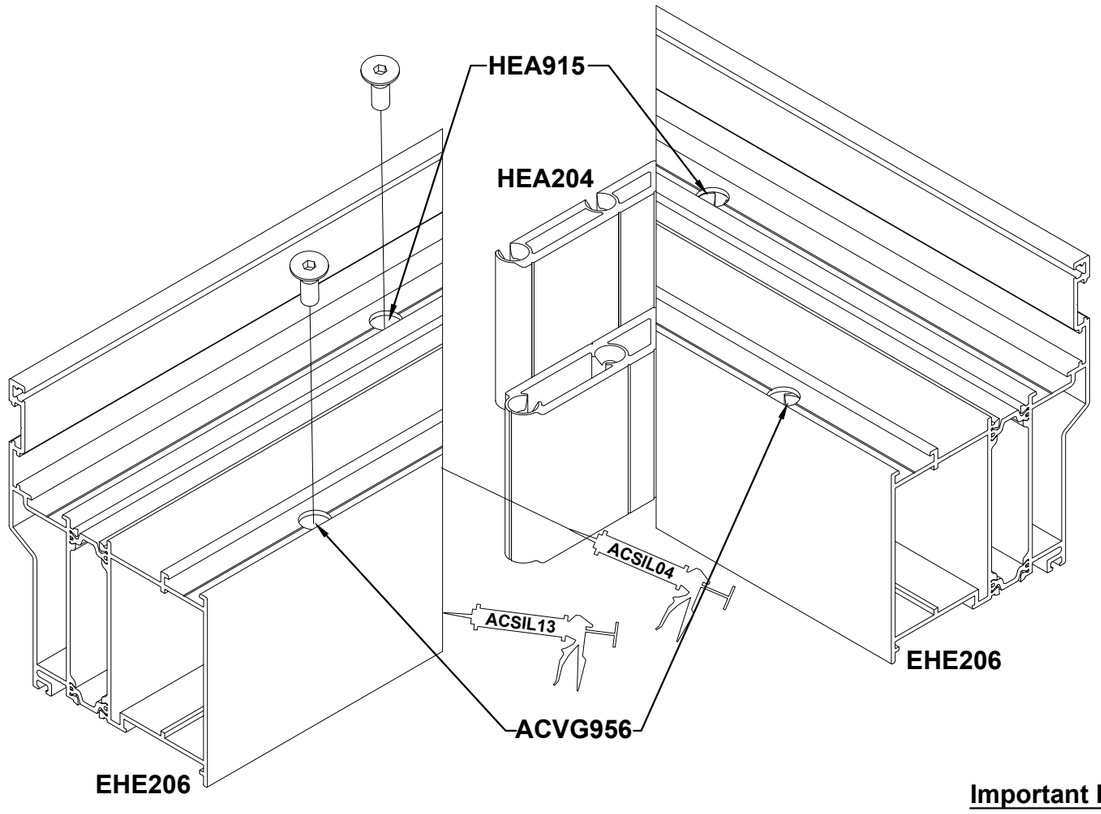

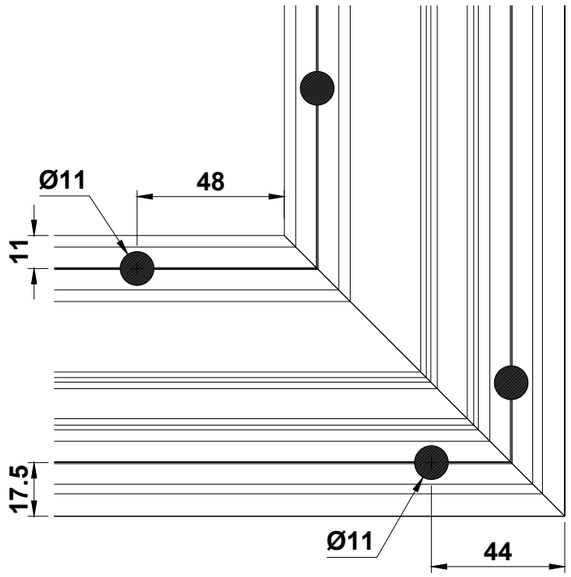

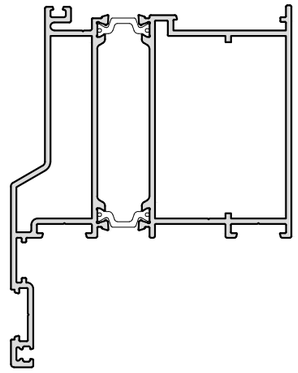

Important Fabrication Note:
HEA204 cleats require 2 screws per cleat. Only drill where shown.

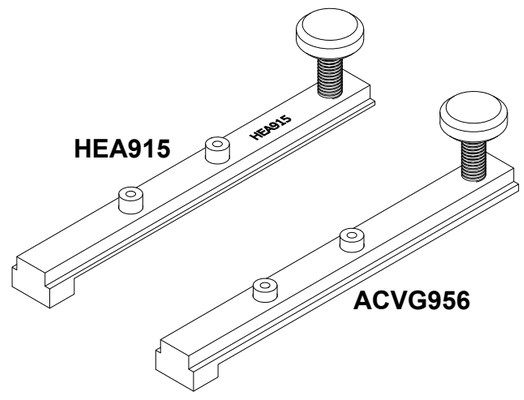

Do Not Scale From This Drawing

Hinge Details

EHE206

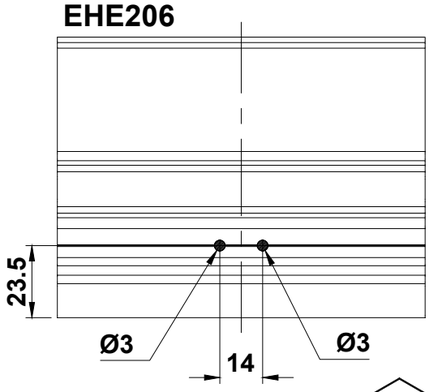

EHE206

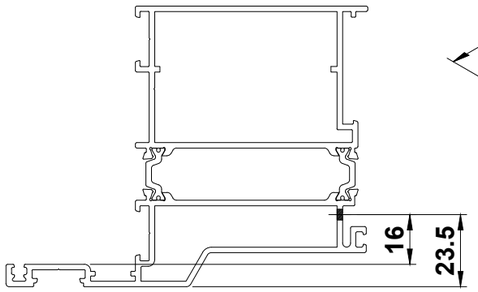

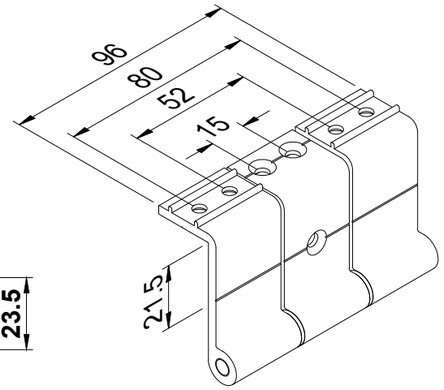

HEA250 Hinge

EHE200N

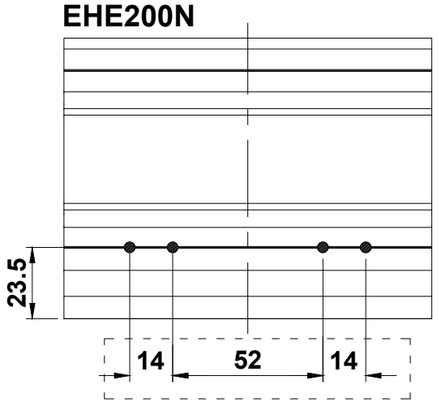

EHE200N

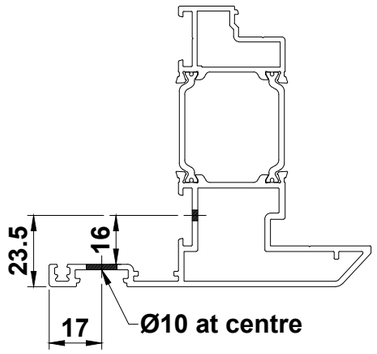

Max weight limit per HEA250 hinge = 25kg.
Increase hinge quantity based on overall weight and space equally.

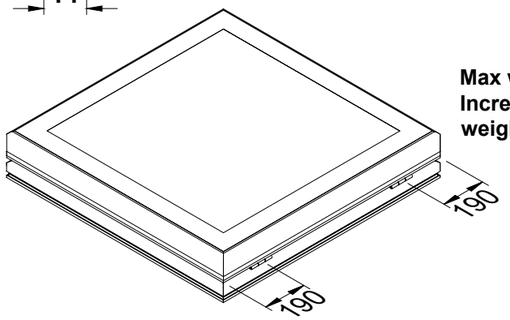

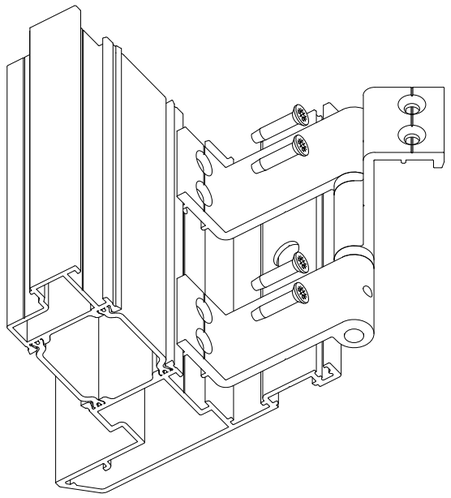

1. Secure hinge to EHE200N using 4 x ACET060:

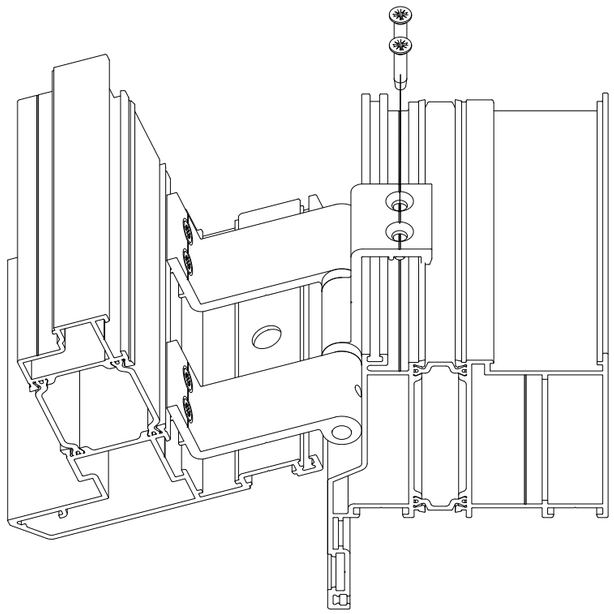

2. Secure hinge to top of EHE206 using 2 x ACET060 as shown:

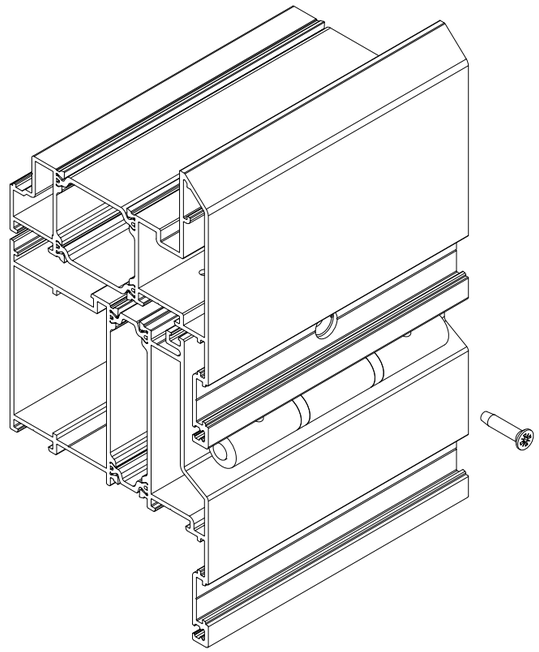

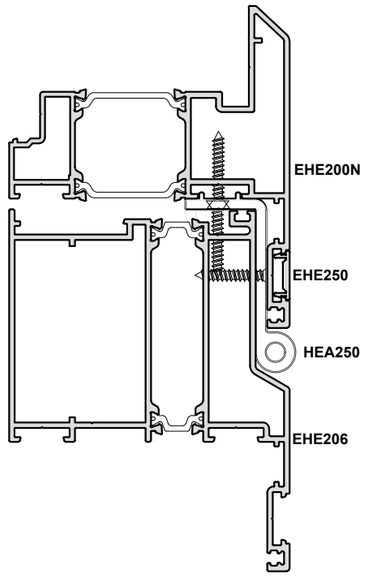

3. Close assembly and secure hinge to side of EHE206 through Ø10mm hole in EHE200N using 1 x ACET060 as shown:

Do Not Scale From This Drawing

Opening Roof Light Actuator Assembly

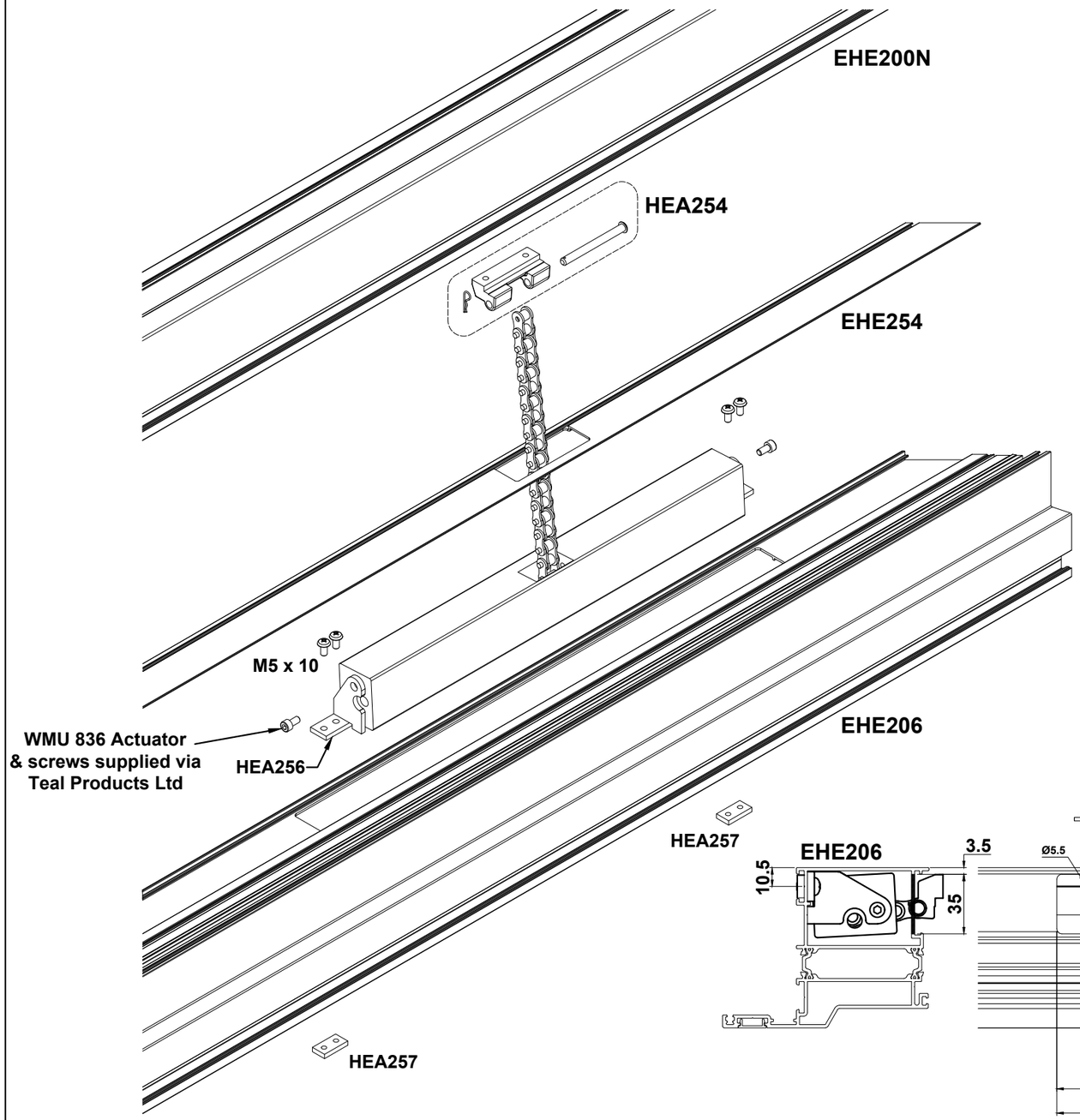

Please contact Teal Products Ltd regarding the installation of WindowMaster's WMU 836 actuator and the available accessory options.
T: 01242 620318
E: sales@tealproducts.co.uk
W: www.tealproducts.com/
Teal are a certified partner of WindowMaster.

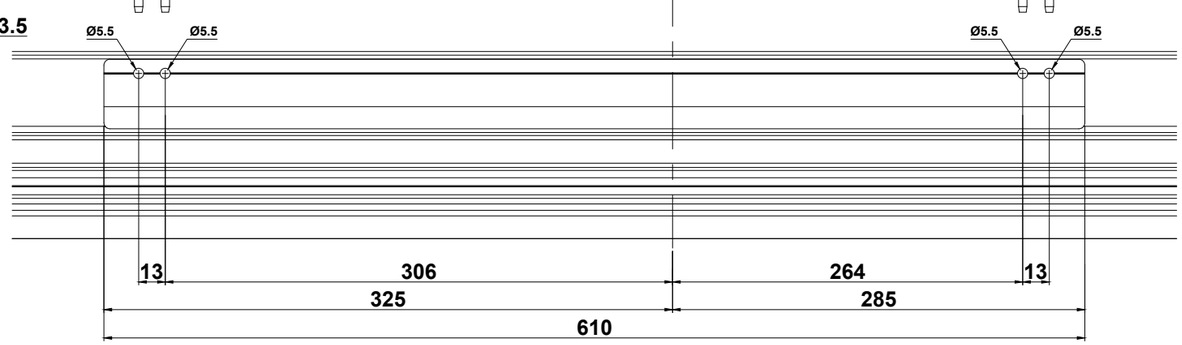

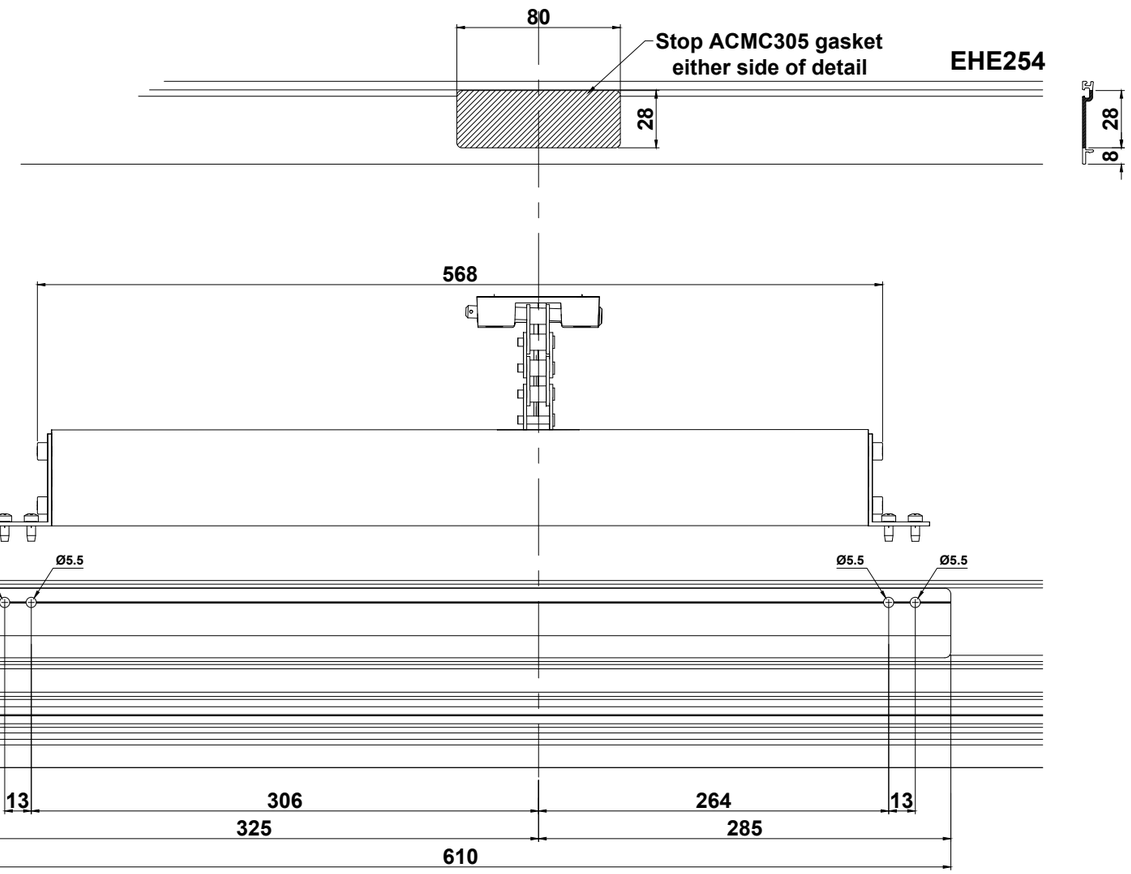

Do Not Scale From This Drawing

ISSUED : November 2022

EHE255 Detail

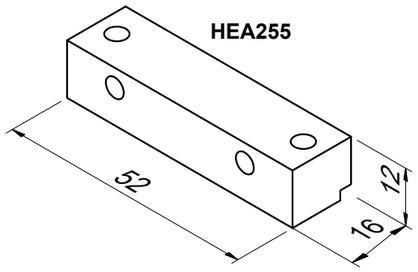

HEA255 allows HEA254 to be fixed through the internal face, which allows access should the actuator fail when closed.

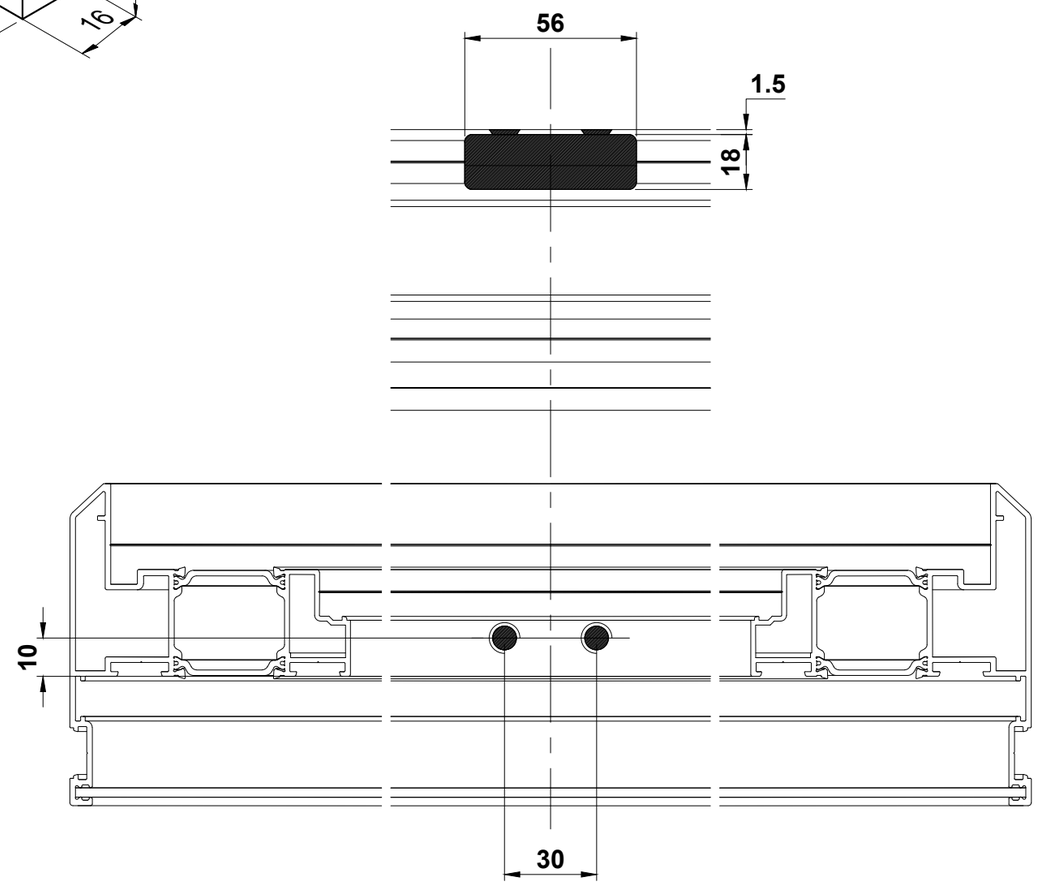

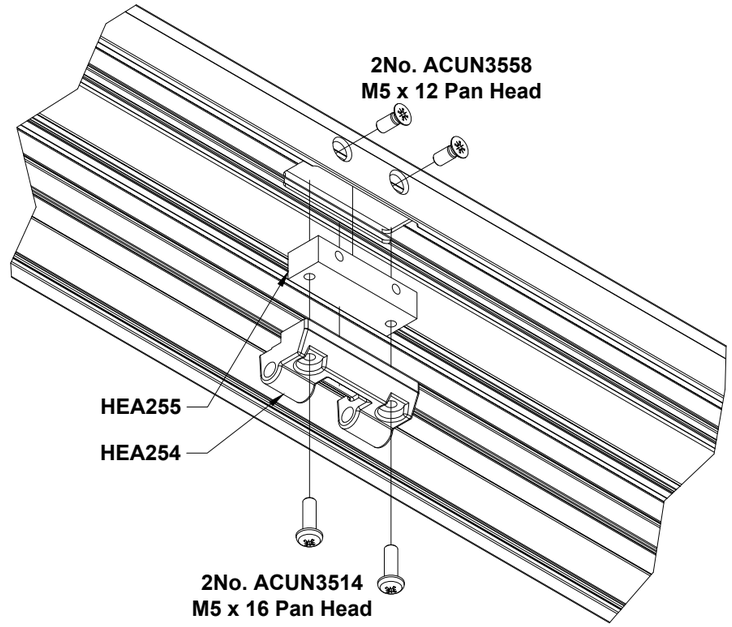

Do Not Scale From This Drawing

Opening Rooflight Size Guidance

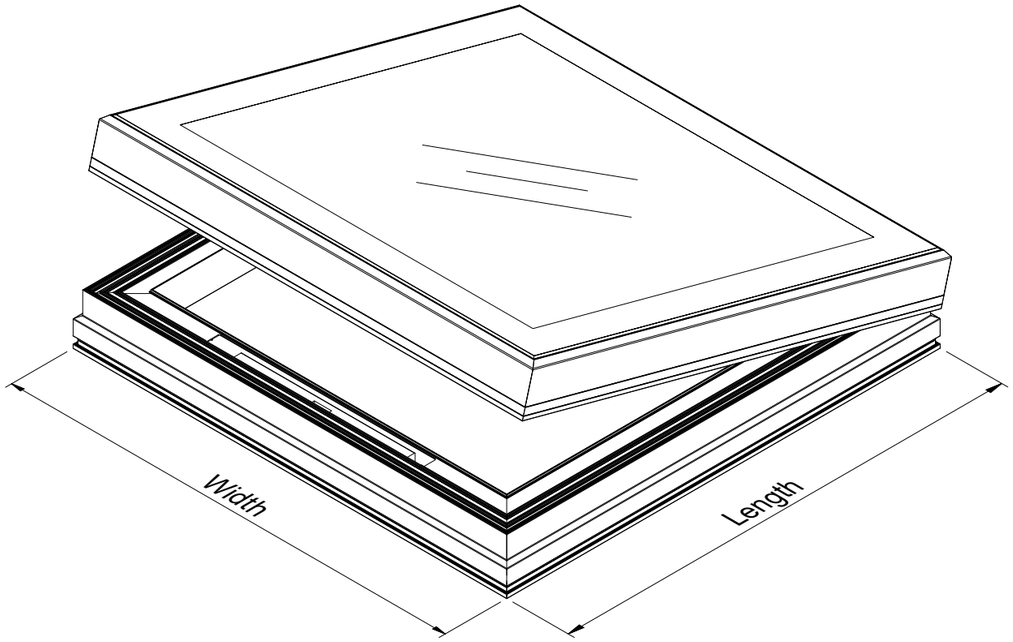

Chain Stroke = 400mm

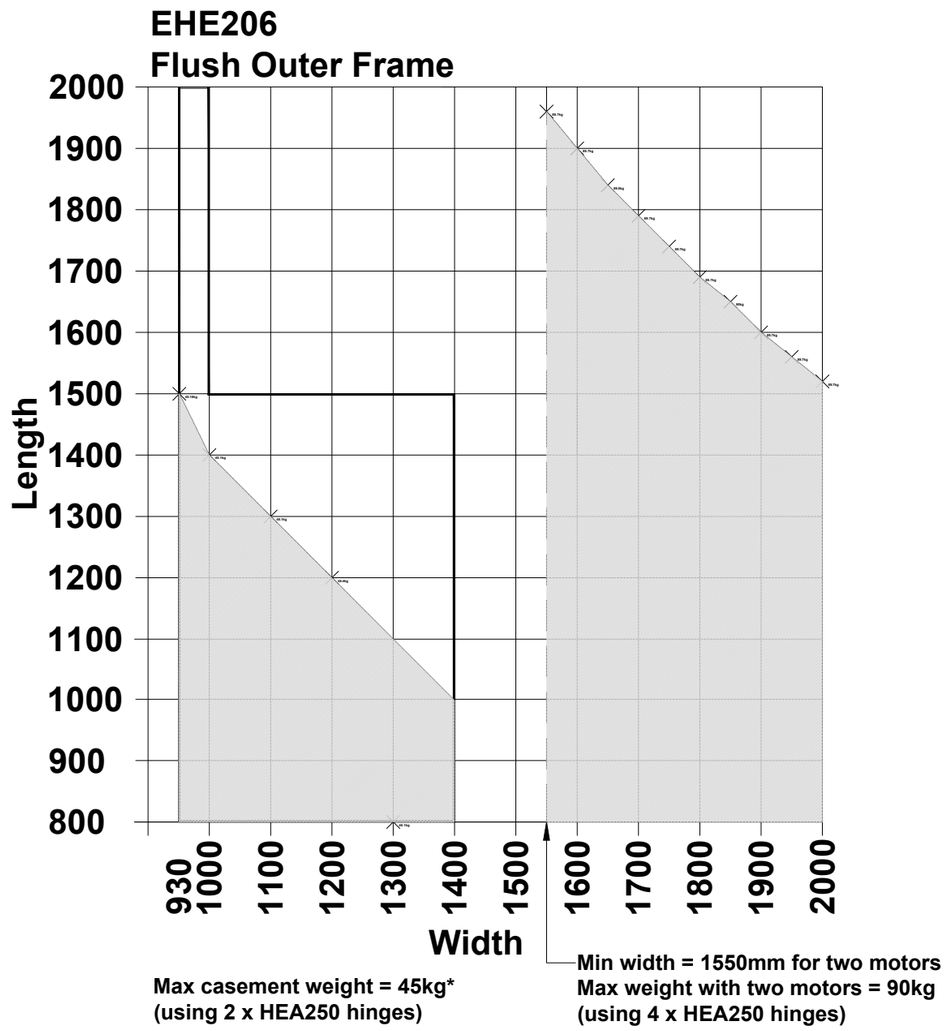

Hatched area shows sizes achievable based on casement weight when using 6.8mm/4mm units

Sizes within line are achievable where weight permits

* Increase hinge quantity based on overall weight. Each HEA250 hinge = 25kg limit.

Opening Rooflight Details:

- Sizes shown are based on WindowMaster WMU 836 supplied by Teal Products Ltd
- 1400mm is the maximum width using a single motor
- 1550mm is the minimum width for two motors
- The cable for the WMU 836 actuator needs to be run through the frame.
- Please contact Teal Products Ltd regarding the supply and installation of the actuators.

Do Not Scale From This Drawing

Opening Rooflight Size Guidance

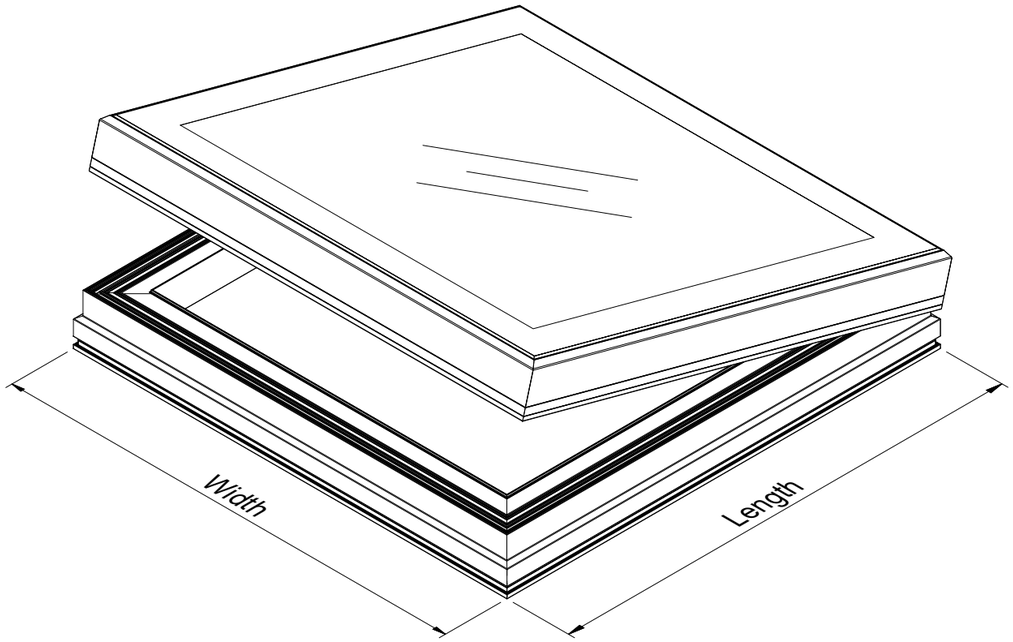

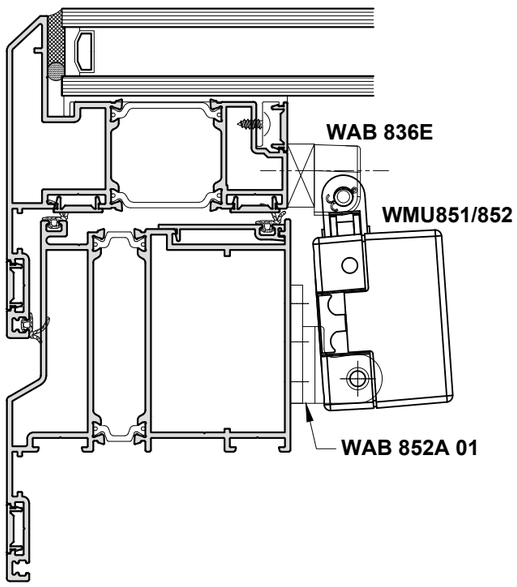

Opening Rooflight Details:

- Sizes shown are based on WindowMaster
- WMU 851 / 852 supplied by Teal Products Ltd
- 1400mm is the maximum width using a single motor
- 1550mm is the minimum width for two motors
- Please contact Teal Products Ltd regarding the supply and installation of the actuators.

Chain Stroke = 400mm

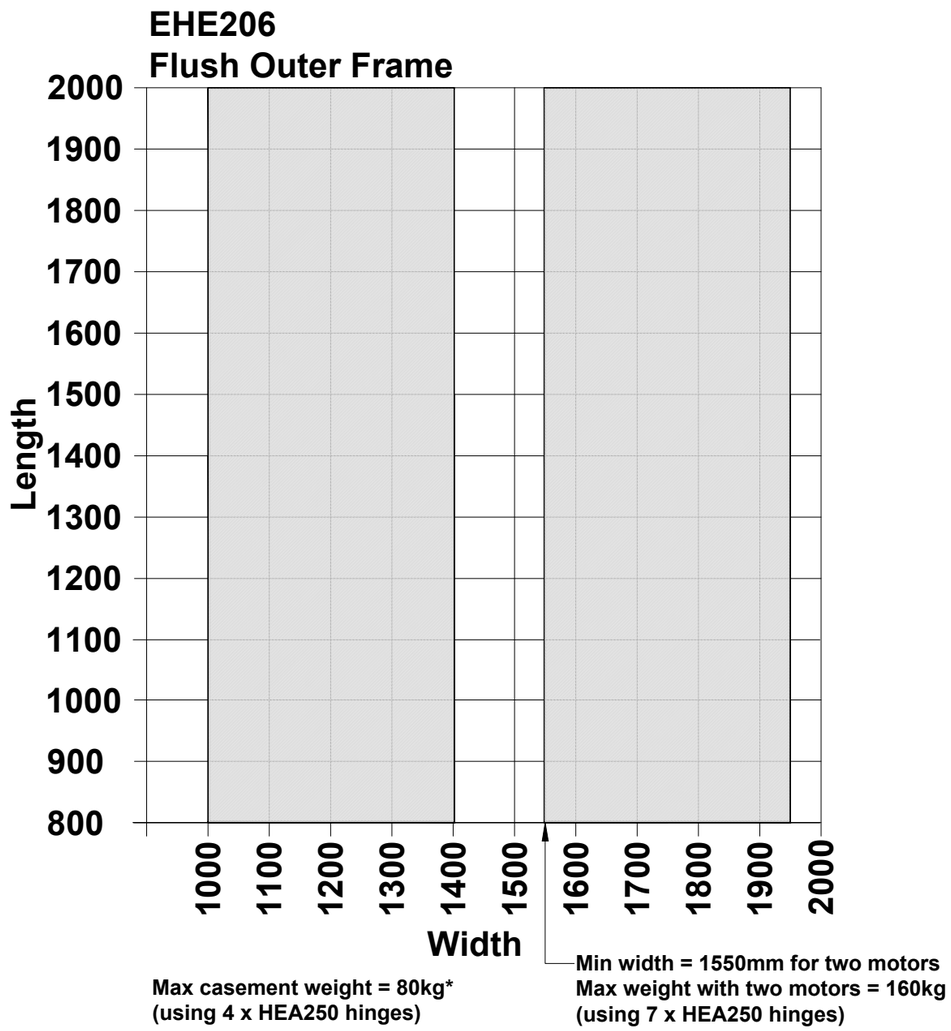

Hatched area shows sizes achievable based on casement weight when using 6.8mm/4mm units

Sizes within line are achievable where weight permits

* Increase hinge quantity based on overall weight. Each HEA250 hinge = 25kg limit.

Do Not Scale From This Drawing

Do Not Scale From This Drawing

Section F

F EHE

Sawing Tables

Fixed Rooflight..... F03 - F05
Walk On Rooflight..... F06
Opening Vent Rooflight..... F07

Section F

Fixed Rooflight

Profiles

EHE200N	2	W
EHE200N	2	L
EHE250	2	W
EHE250	2	W - 183
EHE250	2	L
EHE250	2	L - 183
EHE255	2	W - 37
EHE255	2	L - 37

Accessories

HEA206	4	EHE200N Chevron
HEA207	4	EHE200N Cleat Pack
ACET068	300mm Centres	No.8 x 3/8 SS Flange Screw
ACET131	2	Drainage Cap
ACUN3616	2xW-36 & 2xL-36	ACUN3610 Backing Rod

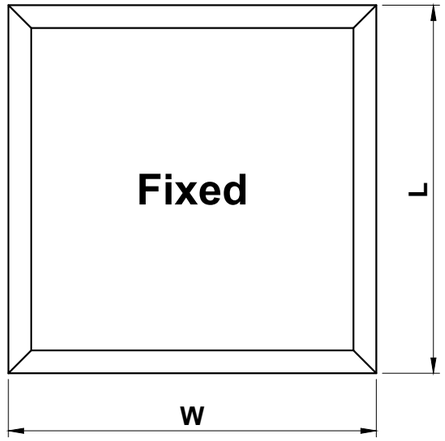

Glass Sizes	
1x	W - 36
	L - 36

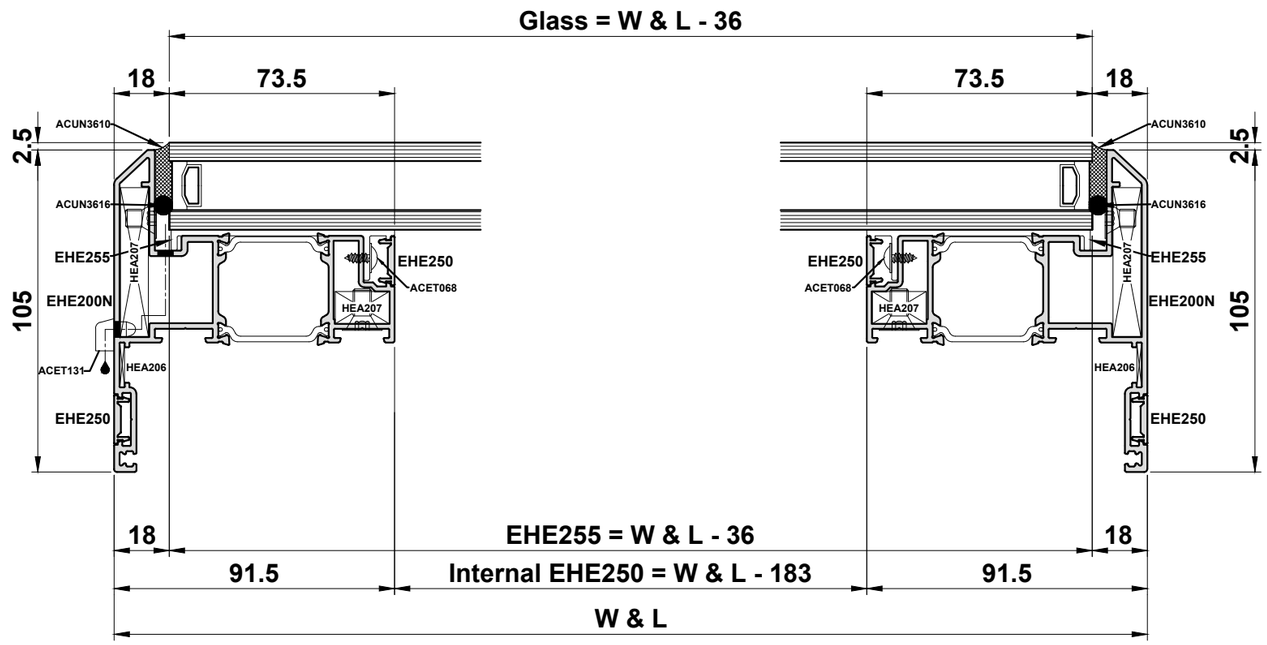

Do Not Scale From This Drawing

Fixed Rooflight with Mullion

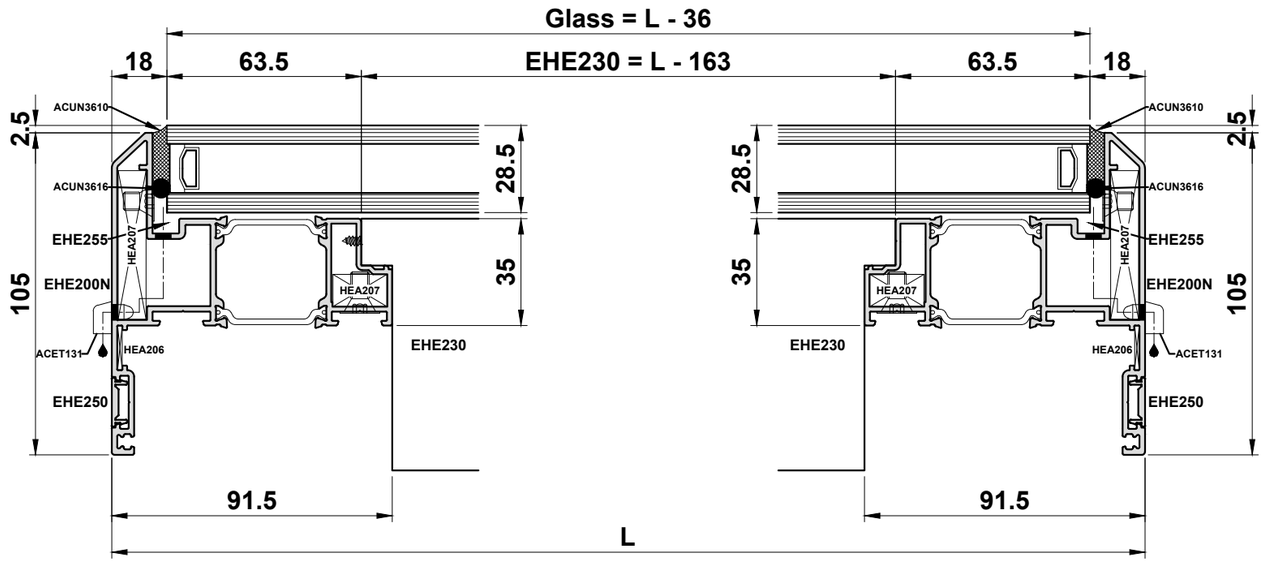

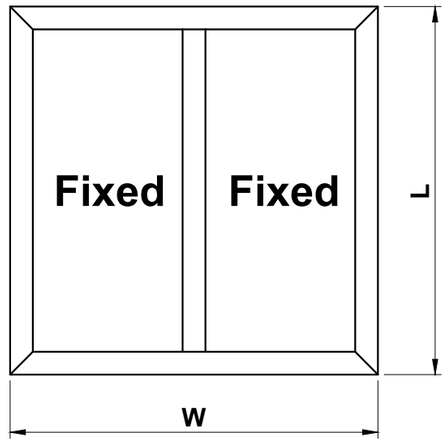

Accessories

HEA206		4	EHE200N Chevron
HEA207		1	EHE200N Cleat Pack
HEA210		2	EHE230 Bracket
HEA211		2	EHE230 Fixing Bracket
ACET068		300mm Centres	No.8 x 3/8 SS Flange Screw
ACET131		4	Drainage Cap
ACUN3616		2xW-36 & 2xL-36	ACUN3610 Backing Rod

Profiles

EHE200N		2		W
EHE200N		2		L
EHE230		1		L - 163
EHE250		4		W/2 - 121.5
EHE250		2		W
EHE250		4		L - 183
EHE250		2		L
EHE255		2		W - 37
EHE255		2		L - 37
EHE256		1		L - 163

Glass Sizes	
2x	W/2 - 22
	L - 36

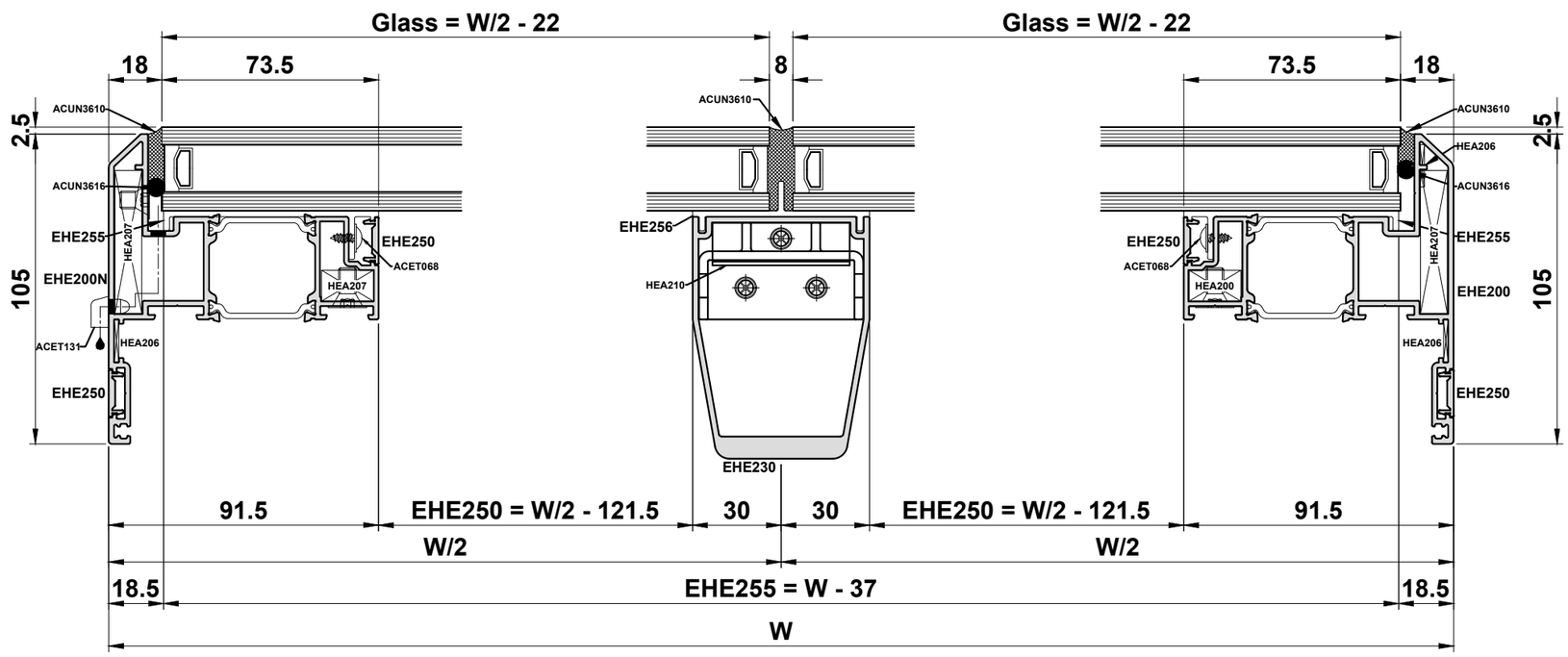

Do Not Scale From This Drawing

ISSUED : November 2022

Fixed Rooflight

Profiles

EHE201	2	W
EHE201	2	L
EHE250	2	W
EHE250	2	W - 183
EHE250	2	L
EHE250	2	L - 183
EHE255	2	W - 37
EHE255	2	L - 37

Accessories

HEA206	4	EHE200N Chevron
HEA212	4	EHE201 Cleat Pack
ACET068	300mm Centres	No.8 x 3/8 SS Flange Screw
ACET131	2	Drainage Cap
ACUN3616	2xW-36 & 2xL-36	ACUN3610 Backing Rod

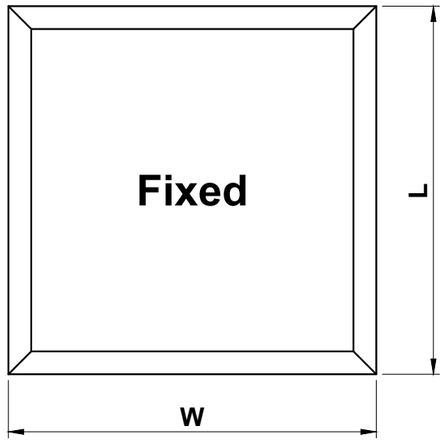

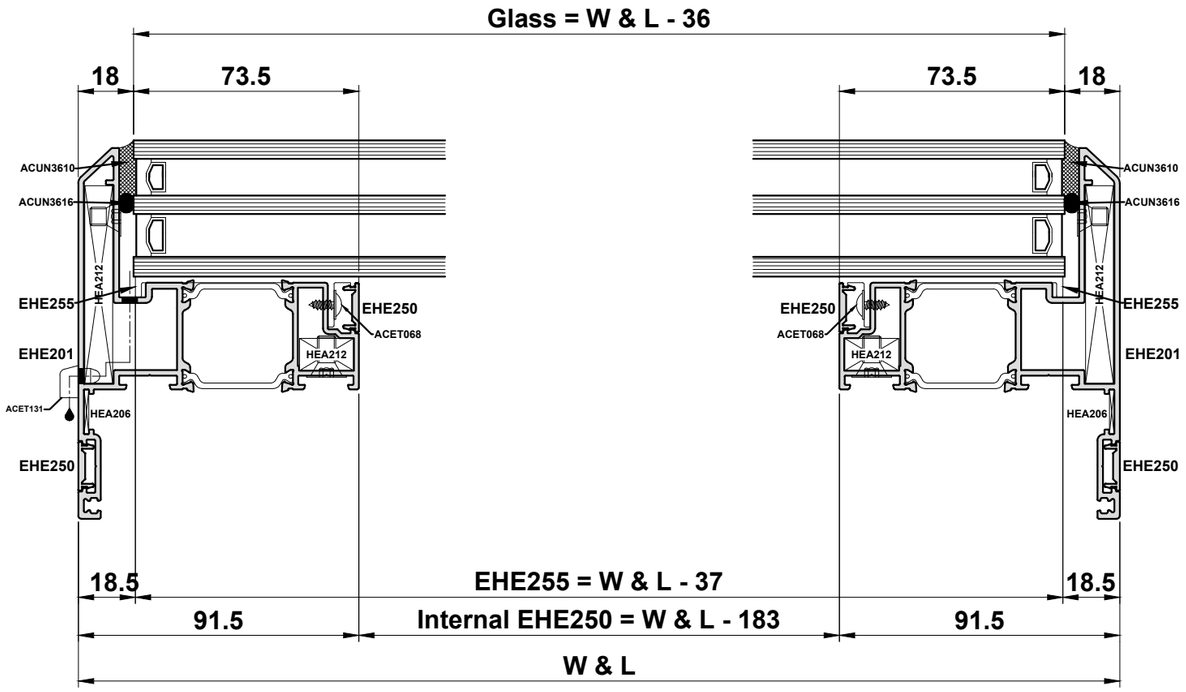

Do Not Scale From This Drawing

Walk On Rooflight

Profiles

EHE202N		2	W
EHE202N		2	L
EHE250		2	W
EHE250		2	W - 183
EHE250		2	L
EHE250		2	L - 183
EHE255		2	W - 37
EHE255		2	L - 37
UTL049		2	W - 42
UTL049		2	L - 42

Accessories

HEA206		4	EHE202N Chevron
HEA207		1	EHE202N Cleat Pack
HEA209		4	UTL049 Cleat
ACET068		300mm Centres	No.8 x 3/8 SS Flange Screw
ACET131		2	Drainage Cap
ACUN3616		2xW-36 & 2xL-36	ACUN3610 Backing Rod

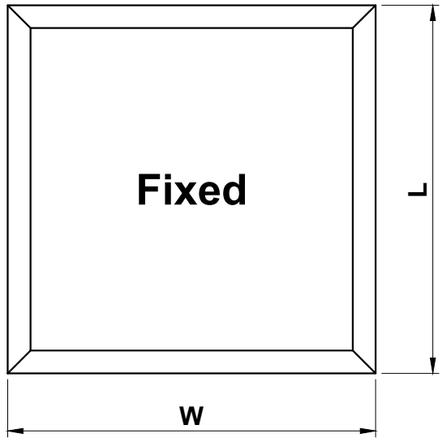

Glass Sizes	
1x	W - 36
	L - 36

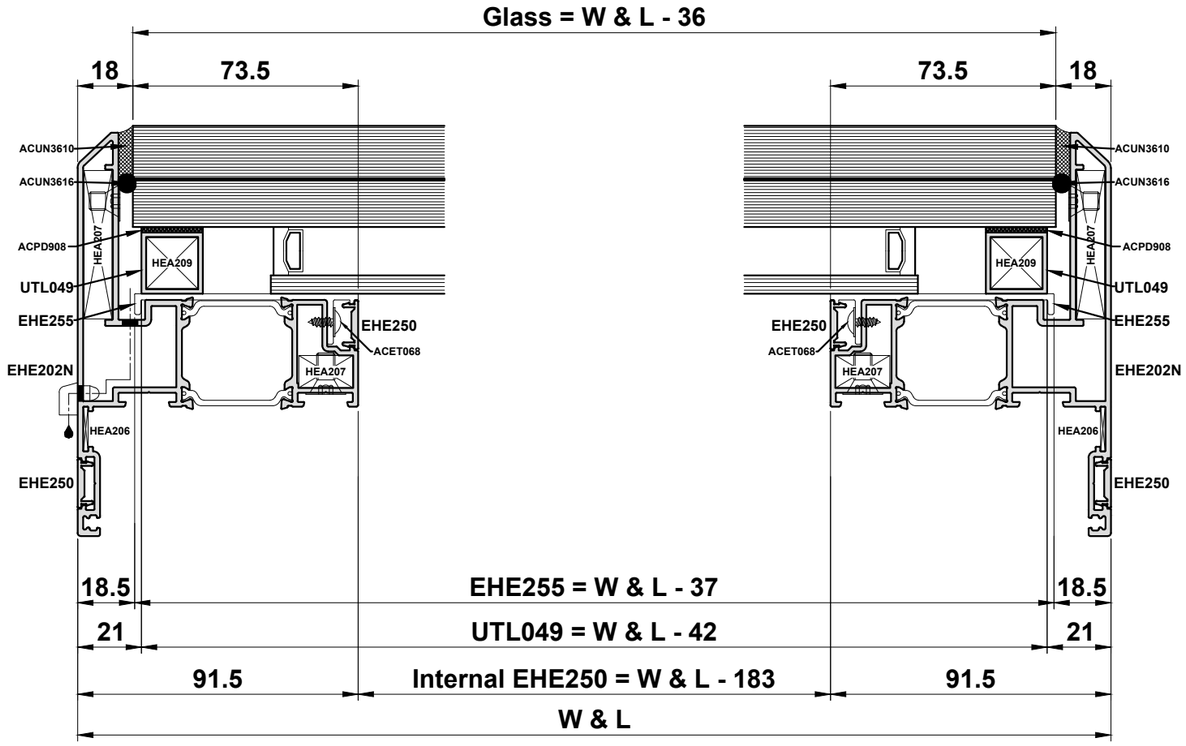

Do Not Scale From This Drawing

Opening Rooflight

Profiles

EHE200N	2		W
EHE200N	2		L
EHE206	2		W
EHE206	2		L
EHE250	4		W
EHE250	4		L
EHE250	4		W - 183
EHE250	4		L - 183
EHE250	2		W - 146
EHE250	2		L - 146
EHE250	2		W - 30
EHE250	2		L - 30
EHE254	2		W - 97
EHE254	2		L - 97
EHE255	2		W - 37
EHE255	2		L - 37

Glass Sizes	
1x	W - 36
	L - 36

Mitre as shown

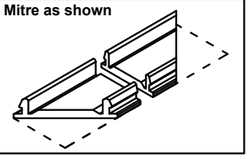

Accessories

HEA204	1	EHE206 Cleat Pack
HEA206	4	Chevron
HEA207	1	EHE200N Cleat Pack
HEA250	2*	Hinge
HEA254	1	Actuator Chain Bracket
HEA255	1	HEA254 Fixing Bracket
HEA256	1 Pair	Actuator Motor Brackets
HEA257	2	Actuator Bracket Fixing Plate
ACET060	14	No.7 x 1 Hinge Screws (7 per hinge)
ACET068	300mm Centres	No.8 x 3/8 SS Flange Screw
ACET131	2	Drainage Cover Cap
ACMC305	4	W & L - 22
ACMC305	4	W & L - 160
ACUN3514	2	M5 x 25 Pan Head for HEA254
ACUN3558	2	M5 x 10 Pan Head for HEA255
ACUN3616	2xW-36 & 2xL-36	ACUN3610 Backing Rod

*Additional hinges required depending on sash width and weight.
See pages E16 & E17 for further details.

Please contact:
Window Master Control Systems Ltd
T. 01536 614070 / Windowmaster.com
for opening actuator ordering details.

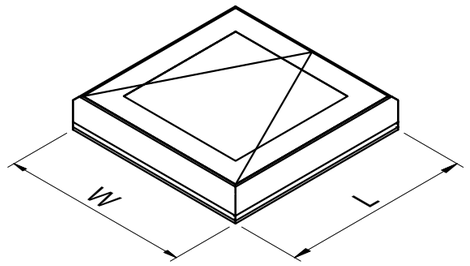

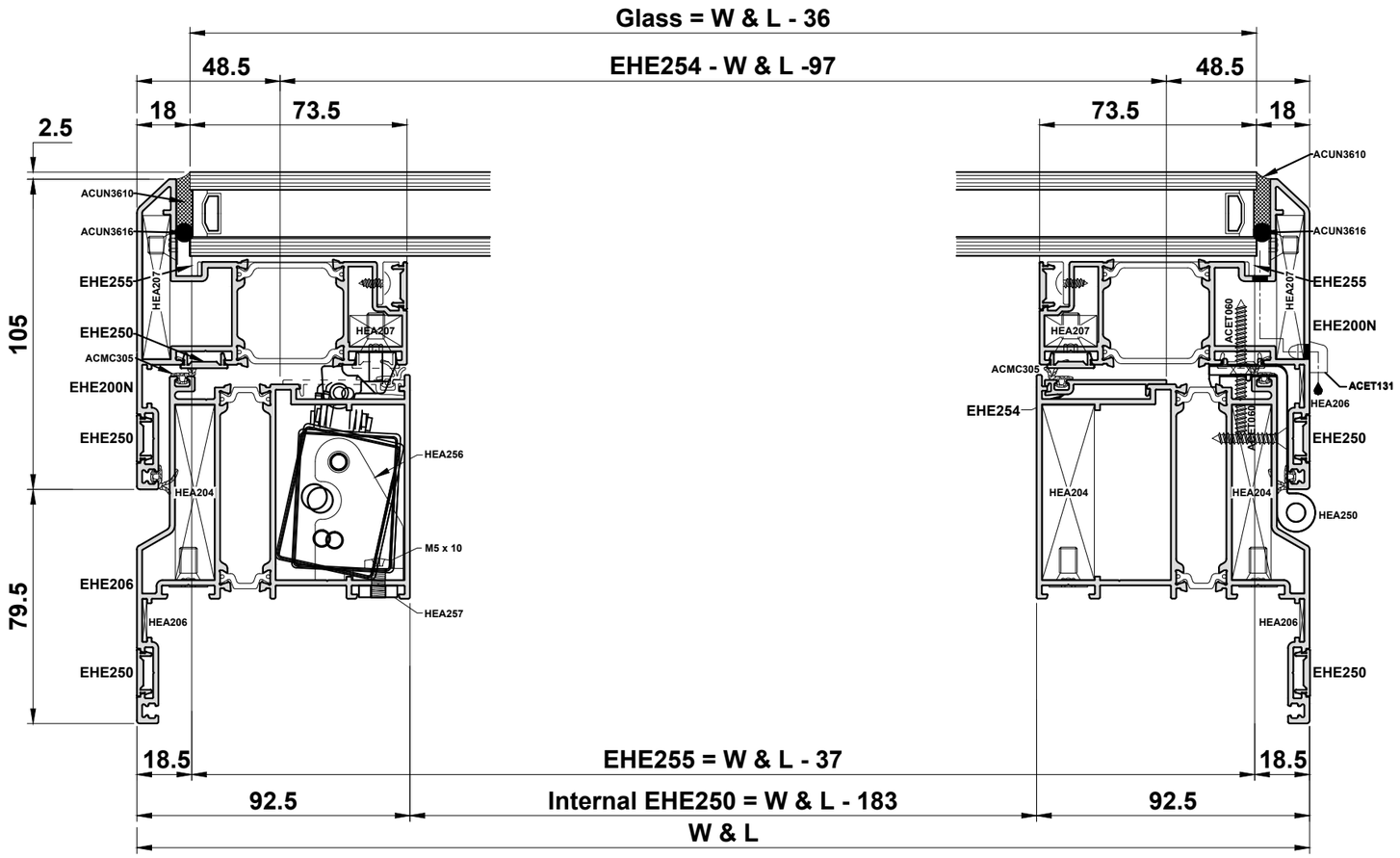

Do Not Scale From This Drawing