Main Index

VG Index

Index..... A01 - A02

A VG

Profiles

Specification Pages..... A03 - A6
Technical Information..... A07 - A10
Scale Profile Drawings..... A11 - A17

B VG

Accessories

Photos & Drawings..... B03 - B18

C VG

Sections

Scale Elevations..... C03 - C14

D VG

Statics..... D01 - D02

E VG

Construction Drawings

Corner Joint Details..... E03
Drainage..... E04 - E05
ACVG565 Roller Details..... E06
VG929 Assembly..... E07
VG932 & VG935 Interlock Machining..... E08 - E09
Sash Bonding..... E10
BT Lock Assembly..... E11 - E12
Four Pane Meeting Stile Details..... E13
ACVG980 Location..... E14
ACUN348 Fitting..... E15
Example Threshold Detail..... E16

F VG

Sawing Tables

Two Pane, VG932 Interlock & BT Lock..... F03
Two Pane, VG935 Interlock & BT Lock..... F04
Three Pane, VG932 Interlock & BT Lock..... F05
Three Pane, VG935 Interlock & BT Lock..... F06
Four Pane, VG932 Interlock & BT Lock..... F07
Four Pane, VG935 Interlock & BT Lock..... F08

Updates

DATE	PAGE	DESCRIPTION

Specification

GENERAL DESCRIPTION

Invisoglide is a patio door system with minimal sightlines and is designed in a way that allows the frame to be concealed into the aperture during installation.

The system achieves excellent U values inline with the current Building Regulations.

The system is suitable for replacement patio doors in existing buildings and for installation into new buildings.

Invisoglide uses the highly secure BT lock which is key operated, and allows the choice of modern raised or flush pull handles.

Assembly of the outerframe and the sashes is with mechanical cleats for which the holes are prepped using punch tools ACVG907 . See Pages E03 for details.

Sashes are bonded and assembled around the units.

PROFILE SPECIFICATION

The window frame are constructed of aluminium alloy extrusion to BS EN 755-9 and BS EN 12020, extruded to 6063 T6 alloy. The internal and external extrusions are separated with a polyamide thermal break.

The external aluminium alloy extrusion is pre-treated and finished either:-

a) Anodised to BS 3987: 1987, grade AA25 to a natural self colour.

b) Polyester powder organic coating to BS 6496. Dual colour is available.

GENERAL MANUFACTURING

Outer frames are made by cutting the frame profiles with accurate 45° mitred ends using Tungsten Carbide Tipped Saw Blades, operating at approximately 3000 rpm.

The corner joints can be made using mechanically fixed corner cleats by punching the corners using the relevant punch tooling shown in section E of this manual. All joints should be sealed using ACSIL04 sealant

On polyester powder coated finishes, great care should be taken to avoid getting gap sealer on visible surfaces and should be removed as soon as possible with a clean cloth.

After machining, all exposed aluminium should be coated using ACSIL014 or painted to match frame.

Care should be exercised when using products not supplied by Smart Systems Ltd as no responsibility can be accepted.

Specification

DRAINAGE

As with all dry glazed systems, it is recommended that the profiles are adequately drained and ventilated. Refer to drainage details in section E of this manual, if in doubt, ask the Technical Department.

Invisoglide is compatible with the Aquabocci R47 threshold drainage. Please visit their website for further details.

OUTER FRAME & VENT MANUFACTURING INFORMATION

The outer frame members are cut with 45° mitred ends to the overall size required, measured to the longest point of the metal.

Corners are formed by coating the cut faces to be joined with ACSIL04 small gap sealer and by applying ACSIL013 cleat glue into the cleat chamber. Into the mitred corner insert the required corner cleats and, where required, the aluminium corner chevrons. The two mitred ends are then brought together and mechanically joined. The small gap sealer ensures a permanent joint and guards against the ingress of moisture and joint movement. After joining the corners, special care should be taken to ensure any excess sealer is removed from painted surfaces.

LOCKING

The vertical members should be prepped for the locking mechanism prior to fabrication and fitted before assembly. Stainless steel fixings shall be used for securing the locking mechanism and keeps in position.

GLAZING

Glazing is restricted to 32mm thickness.

RECOMMENDED DESIGN LIMITATIONS

Sliding Sashes	
Maximum Sash Weight:	**250kg**
Minimum Sash Height:	**800mm**
Maximum Sash Height:	**2500mm**
Maximum Sash Width:	**Sashes within the above limitations have no maximum width.**

Please see pages D01-D09 for more guidance on vent sizes & limitations.

Specification

Invisoglide Operational Performance (BS6375-2:2009)

To be tested

Invisoglide Security (PAS24:2016)

To be tested

Invisoglide U Values

Please refer to the Smart Systems' Document L White Paper or contact the Technical Department.

Specification

Number	Picture	Page	Perim. mm	Mec. mm	Ix(cm4) wx(cm3)	Iy(cm4) wy(cm3)	Length	Pack pr.	MF	SA	KL	HP	M
VG901	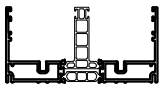	A11	592	423	152.23 / 25.2	18.04 / 10.74	7	1	✓	✓	✓	✓	✓
VG902	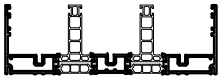	A12	938	723	419.32 / 45.83	19.84 / 13.22	7	1	✓	✓	✓	✓	✓
VG914	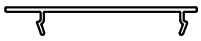	A16	168	82	– / –	– / –	6.5	1	✓	✓	✓	✓	
VG915		A16	165	674	– / –	– / –	6.5	1	✓	✓	✓	✓	
VG918	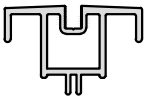	A13	218.1	41	– / –	– / –	6.5	1	✓	✓	✓	✓	
VG923		A13	175	84	5.73 / 2.69	0.56 / 0.83	6.5	1	✓	✓	✓	✓	✓
VG928	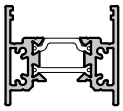	A14	261	81	– / –	– / –	6.5	1	✓	✓	✓	✓	✓
VG929	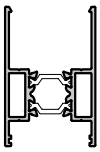	A14	376	138	– / –	– / –	6.5	1	✓	✓	✓	✓	✓
VG932	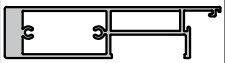	A15	317	208	80.65 / 11.46	5.67 / 4.97	6.5	1	✓	✓	✓	✓	

A = Outside
B = Inside

MF = Mill Finish
SA = Silver Anodised
KL = Basic Colour
HP = Special Colour
M = Dual Colour

smart architectural aluminium

Invisoglide

PROFILES : TECHNICAL INFORMATION

Number	Picture	Page	Perim. mm	Mec. mm	Ix(cm4) wx(cm3)	Iy(cm4) wy(cm3)	Length	Pack pr.	MF	SA	KL	HP	M
VG935		A15	278	158	43.34 — 7.36	2.8 — 3.46	6.5	1	✓	✓	✓	✓	
VG942	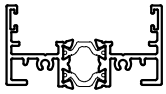	A17	420	84	15.41 — 5.24	1.98 — 1.61	6.5	1	✓	✓	✓	✓	✓
VG956		A11	315	44	68.49 — 10.68	1.1 — 1.41	6.5	1	✓	✓	✓	✓	✓
VG959		A12	514	44	217.35 — 22.2	1.21 — 1.64	6.5	1	✓	✓	✓	✓	✓
VG980	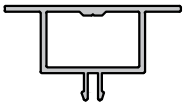	A16	156.8	47	– — –	– — –	6.5	1	✓	✓	✓	✓	
VG06	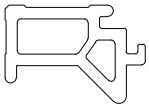	A15	68	--	– — –	– — –	6.5	1	✓				
VG07	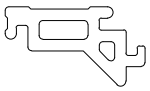	A15	62	--	– — –	– — –	6.5	1	✓				
IMP301	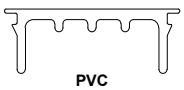 PVC	A14	-	-	– — –	– — –	6.5	1	✓				
PCX47	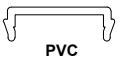 PVC	A17	43	---	- — -	- — -	6.5	1	✓				

A = Outside
B = Inside

MF = Mill Finish
SA = Silver Anodised
KL = Basic Colour
HP = Special Colour
M = Dual Colour

Number	Picture	Page	Perim. mm	Mec. mm	Ix(cm4) wx(cm3)	Iy(cm4) wy(cm3)	Length	Pack pr.	MF	SA	KL	HP	M
VG53	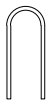 Stainless Steel	A13	106	-	– — –	– — –	6.5	1	✓				

A = Outside
B = Inside

MF = Mill Finish
SA = Silver Anodised
KL = Basic Colour
HP = Special Colour
M = Dual Colour

Invisoglide

PROFILES : TECHNICAL INFORMATION

Number	Picture	Page	Perim. mm	Mec. mm	Ix(cm4) wx(cm3)	Iy(cm4) wy(cm3)	Length	Pack pr.	MF	SA	KL	HP	M

A = Outside
B = Inside

MF = Mill Finish
SA = Silver Anodised
KL = Basic Colour
HP = Special Colour
M = Dual Colour

Primary Visible Side - - - - - - - - - - - - - - - - - - Secondary Visible Side — · — · — · — · — · — · — · —

VG901
Two Track Outer Frame

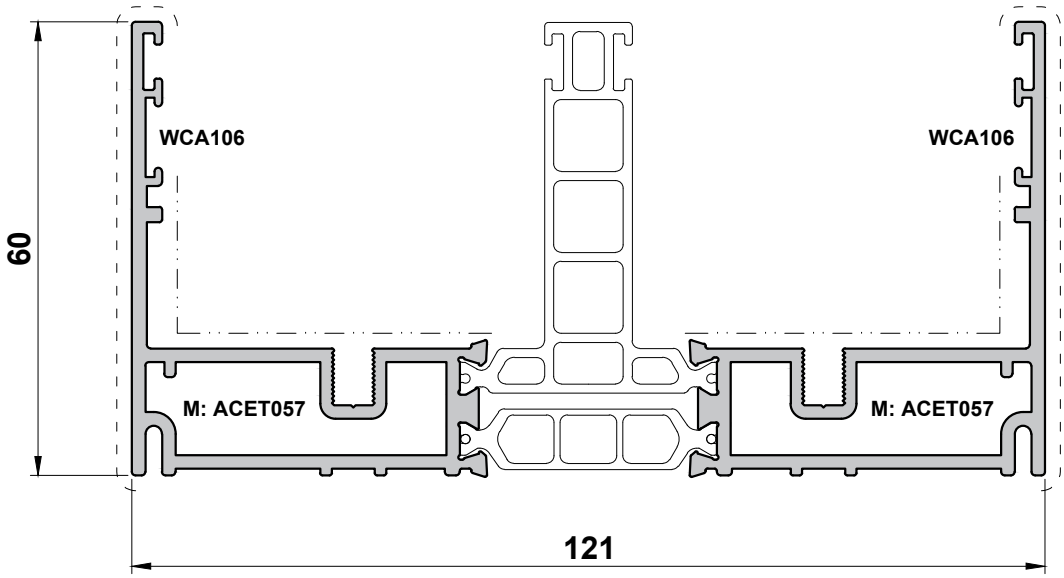

VG956
VG901 Flush Drainage Cill

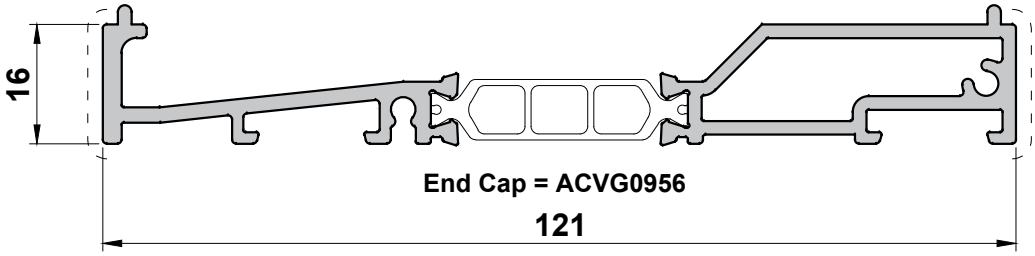

Scale 1:1

Primary Visible Side - - - - - - - - - - - - - - - - - - Secondary Visible Side — · — · — · — · — · — · — · — · —

VG902
Three Track Outer Frame

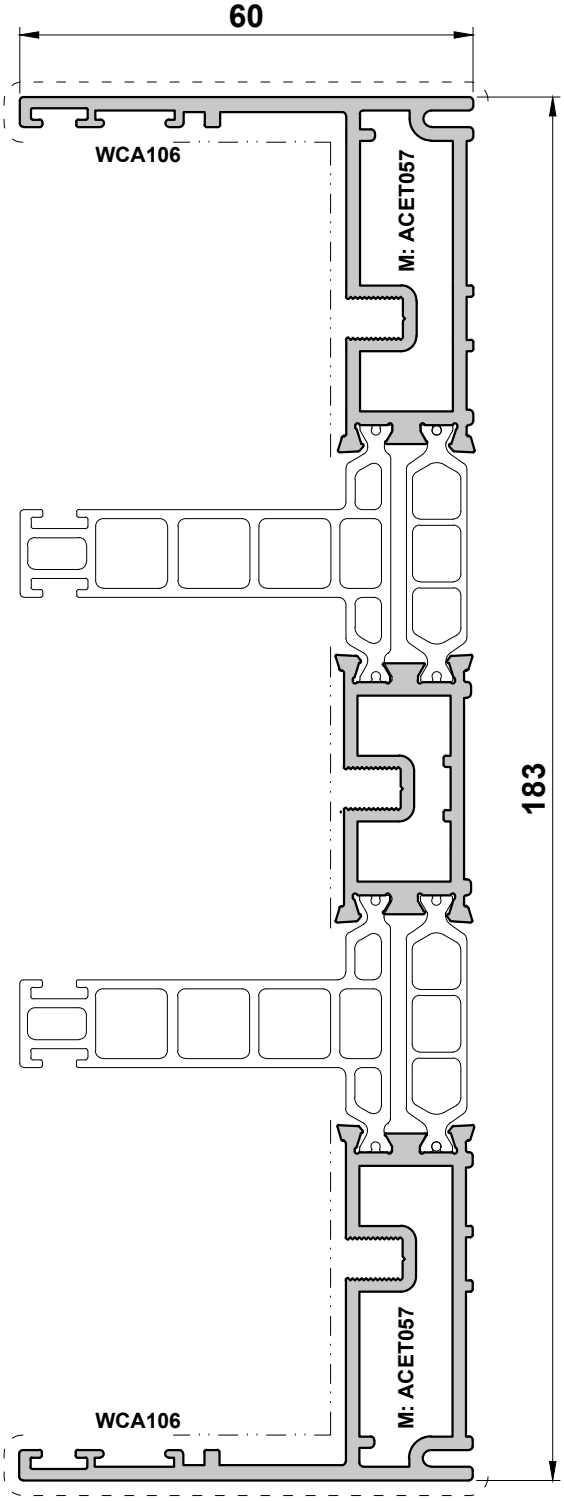

VG959
VG902 Flush Drainage Cill

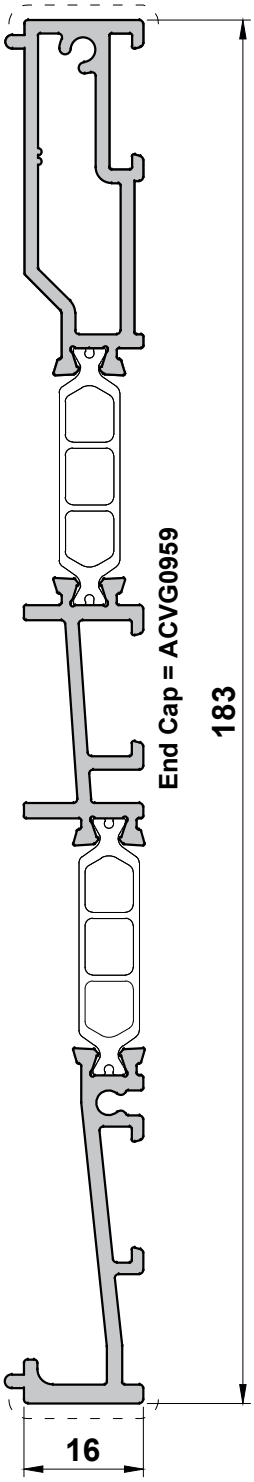

Scale 1:1

Primary Visible Side - - - - - - - - - - - - - - - - - - Secondary Visible Side — · · — · · — · · — · · — · · — · · —

VG53
Stainless Steel Track

VG918
Track Insert

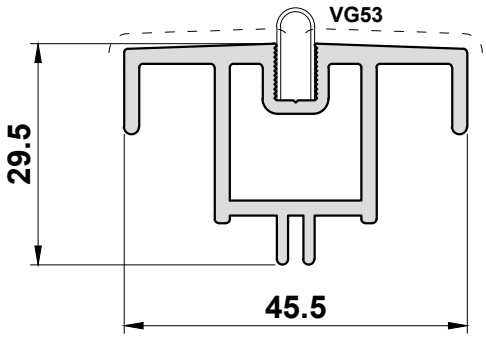

VG923
Top Sash Rail

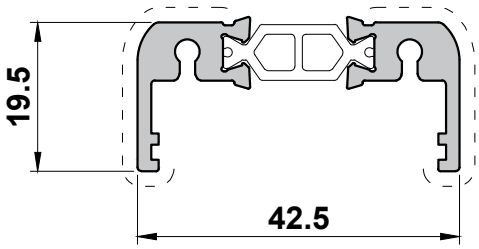

Scale 1:1

Primary Visible Side - - - - - - - - - - - - - - - - - - Secondary Visible Side — · · — · · — · · — · · — · · — · · — · · —

VG928
Bottom Rail

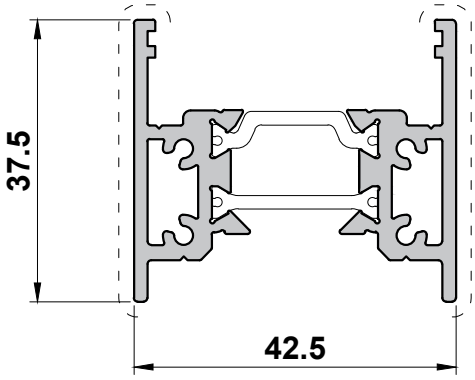

IMP301
PVC Infill Strip

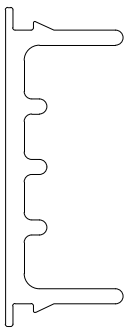

VG929
Locking Stile

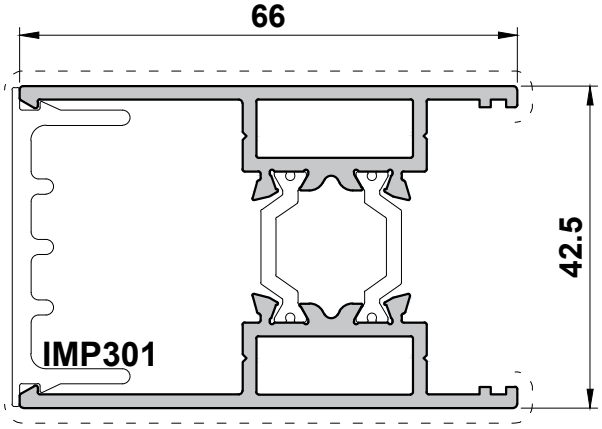

Scale 1:1

Primary Visible Side - - - - - - - - - - - - - - - - - - Secondary Visible Side — · — · — · — · — · — · — · —

VG932
Locking Interlock

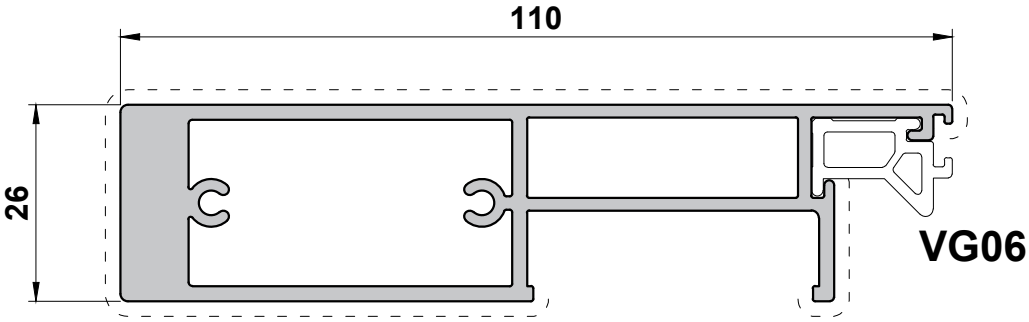

End Cap = ACVG0932
Cover Cap = ACVG0931

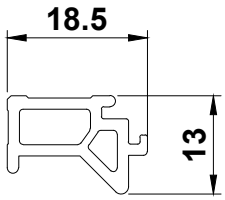

VG06
VG932 Polyamide

VG935
20mm Interlock

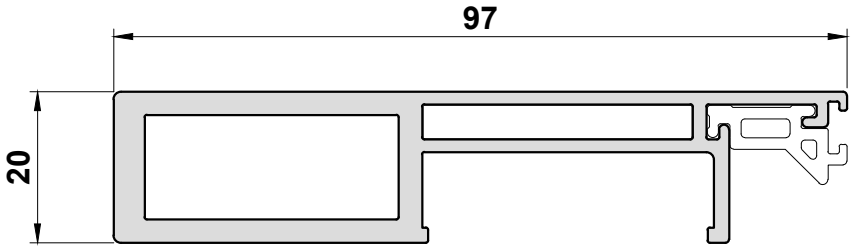

End Cap = ACVG0933
Cover Cap = ACVG0931 CHECK

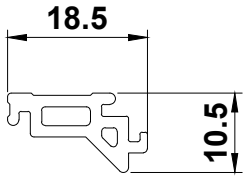

VG07
VG935 Polyamide

Scale 1:1

Primary Visible Side - - - - - - - - - - - - - - - - - - Secondary Visible Side — · — · — · — · — · — · — · — · —

VG980
Track Infill
(Anti-Lift & Buffer)

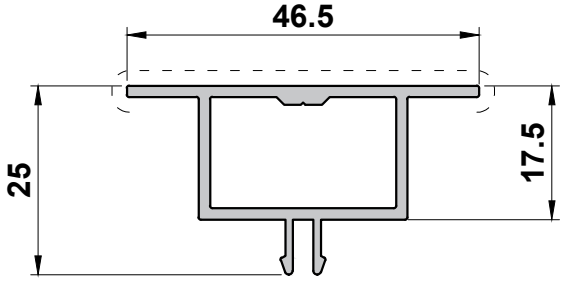

VG914
Two Track Cover

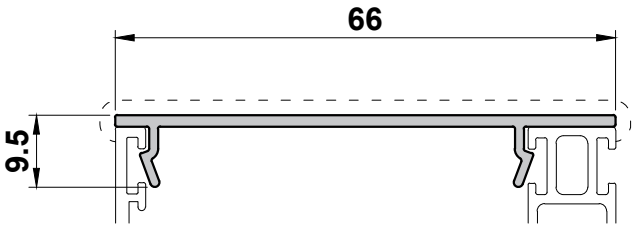

VG915
Three Track Cover

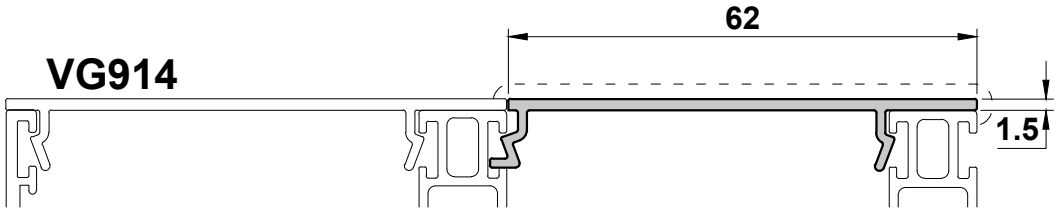

Scale 1:1

Primary Visible Side - - - - - - - - - - - - - - - - - - Secondary Visible Side — · · — · · — · · — · · — · · — · · —

VG942
Meeting Stile

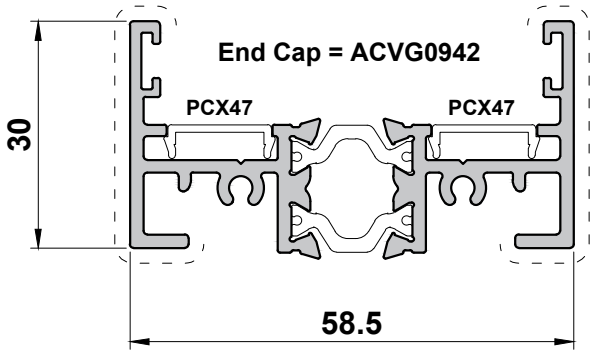

PCX47
PVC Infill

Scale 1:1

Invisoglide

PROFILE : SCALED PROFILE DRAWINGS

Primary Visible Side - **Secondary Visible Side** — · · — · · — · · — · · — · · — · · — · · —

Scale 1:1

Section B

Accessories

Photos & Drawings

Punch Tool

Part Number : ACVG907

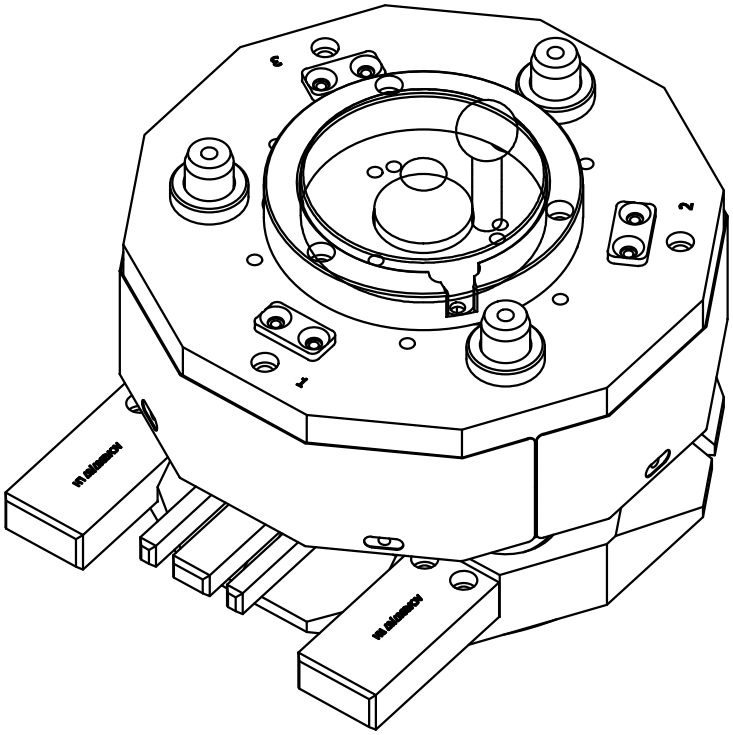

Spray Oil: ACVL158

Punch Tool Base : ACIP529

Countersunk Screws

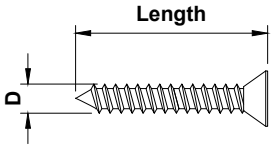

Gauge	'D' (mm)
No.6	3.5
No.7	3.8
No.8	4
No.10	5
No.12	6

Part Number	Gauge	X	Length	Description	Box Qty.
ACUN3530	No.6	X	5/8"	Countersunk Pozi Self Tapper S/S	100
MUA025SSZ	No.6	X	1"	Countersunk Pozi Self Tapper S/S	100
ACET067	No.7	X	1/2"	Countersunk Pozi Self Tapper S/S	100
ACET060	No.7	X	1"	Countersunk Pozi Self Tapper S/S	100
ACET066	No.7	X	1 1/2"	Countersunk Pozi Self Tapper S/S	100
MUA067SSZ	No.7	X	2"	Countersunk Pozi Self Tapper S/S	100
ACUN3544	No.7	X	3/4"	Countersunk Pozi Self Tapper S/S	100
ACET064	No.8	X	5/8"	Countersunk Pozi Self Tapper S/S	100
ACUN3512	No.8	X	1 1/4"	Countersunk Pozi Self Tapper S/S	100
ACUN3513	No.8	X	1 3/4"	Countersunk Pozi Self Tapper S/S	100
ACET072	No.8	X	2 1/2"	Countersunk Pozi Self Tapper S/S	100
ACET490	4.3mm	X	16mm	Countersunk PH2 Polyamide Screw	1000
ACET290	4.3mm	X	20mm	Countersunk PH2 Polyamide Screw	100
ACET390	4.3mm	X	25mm	Countersunk PH2 Polyamide Screw	200
ACET190	4.3mm	X	45mm	Countersunk PH2 Polyamide Screw	1000
ACVS062	4.3mm	X	65mm	Countersunk PH2 Polyamide Screw	1000
ACET048	No.10	X	3/8"	Countersunk Pozi Self Tapper S/S	100
ACIM062	No.10	X	1 1/4"	Countersunk Pozi Self Tapper S/S	100
ACET062	No.10	X	2"	Countersunk Pozi Self Tapper S/S	100
ACET076	No.10	X	2 1/2"	Countersunk Pozi Self Tapper S/S	100

POLYAMIDE SCREWS

Part Number	Gauge	X	Length	Description	Box Qty.
ACET490	4.3mm	X	16mm	Countersunk PH2 Polyamide Screw	1000
ACET290	4.3mm	X	20mm	Countersunk PH2 Polyamide Screw	100
ACET390	4.3mm	X	25mm	Countersunk PH2 Polyamide Screw	200
ACET190	4.3mm	X	45mm	Countersunk PH2 Polyamide Screw	1000
ACVS062	4.3mm	X	65mm	Countersunk PH2 Polyamide Screw	1000

Pan Head Screws

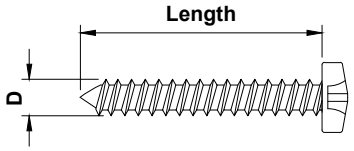

Gauge	'D' (mm)
No.6	3.5
No.7	3.8
No.8	4
No.10	5
No.12	6

Part Number	Gauge	X	Length	Description	Box Qty.
ACET068	No.8	X	3/8"	Pozi Flange AB	100
ACET063	No.8	X	1/2"	Pan Head Self Tapper	100
ACET070	No.8	X	1/2"	Pozi Flange Self Tapper S/S	100
ACUN3535	No.8	X	5/8"	Pan Head Pozi S/S	100
ACET099	No.8	X	3/4"	Pozi Flange Self Tapper S/S	100
ACDR050	4.8mm	X	32mm	Pan Head Pozi S/S	200
PUA028	No.10	X	1"	Pan Head Pozi S/S	100
ACDR052	No.10	X	2"	Pan Head Self Tapper S/S	200
ACET079	No.10	X	2 1/2"	Pan Head Pozi S/S	100
ACW20160	No.12	X	1"	Flange Head Self Tapper S/S	100
ACMC109	6.3mm	X	38mm	DIN7981 - Pan Head Self Tapper	200

Machine Screws

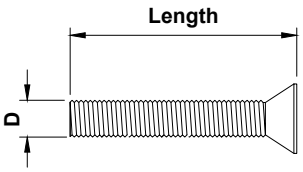

Thread	'D' (mm) Nominal
M4	4
M5	5
M6	6
M8	8
M10	10

Part Number	Thread	X	Length	Description	Box Qty.
ACET122	M4	X	10	CSK Pozi Machine Screw	100
ACET123	M4	X	20	CSK Pozi Machine Screw	100
ACUN3537	M4	X	25	CSK Pozi Machine Screw	100
ACDV264	M4	X	35	CSK Pozi Machine Screw	100
ACSG071	M4	X	40	CSK Pozi Machine Screw	100
ACDV266	M4	X	45	CSK Pozi Machine Screw	100
ACDV262	M4	X	50	CSK Pozi Machine Screw	100
ACDV265	M4	X	60	CSK Pozi Machine Screw	100
ACDR051	M5	X	10	CSK Pozi Machine Screw	100
ACET069	M5	X	12	CSK Pozi Machine Screw	100
HEA132	M5	X	16	CSK Pozi Machine Screw	100
WCA134	M5	X	20	CSK Pozi Machine Screw	100
WCA143	M5	X	25	CSK Pozi Machine Screw	50
ACVS061	M5	X	40	CSK Pozi Machine Screw	100
ACET133	M5	X	50	CSK Pozi Machine Screw	100
ACET220	M5	X	60	CSK Pozi Machine Screw	100
ACET238	M5	X	70	CSK Pozi Machine Screw	100
ACMX861	M5	X	80	DIN965 - CSK Machine Screw	10
ACMX862	M5	X	90	DIN965 - CSK Machine Screw	10
ACUN3503	M6	X	10	CSK Socket Machine Screw	24
ACUN3501	M6	X	13	CSK Flange Socket Machine Screw	48
ACMX852	M6	X	16	DIN965 - CSK Machine Screw	10
HEA390	M6	X	16	CSK Socket Machine Screw	32
ACET235	M6	X	60	CSK Pozi Machine Screw	100
ACET237	M6	X	70	CSK Pozi Machine Screw	100

Image	Part Code	Pack	Unit	Application	Colour	
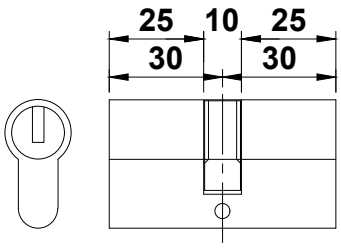	**ACCY3030NKS1** **1 Star High Security 30/30 Europrofile Cylinder Anti-Bump, Anti-Pick, Anti-Screw & Anti-Drill protection. Nickel Finish** **For Keyed Alike Order ACCY3030NKS1SL**	1	Each	ACSZ040 ACSZ041 ACSZ042	MF SA KL HP SSC SMC W Z PC	
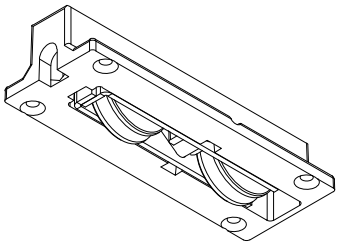	**ACVG565** **Fixed Roller**	1	Each	VG928	MF SA KL HP SSC SMC W Z PC	
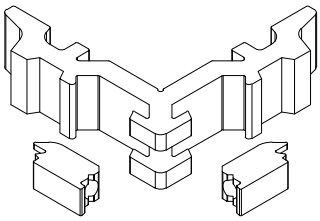	**ACET057** **Mechanical Cleat**	24	pack	VG901 VG902	MF SA KL HP SSC SMC W Z PC	✓
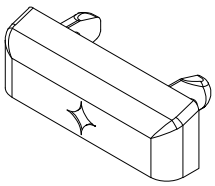	**ACET131** **Drainage Cover Cap** **For colour matched drainage caps, please order ACET432**	100	Pack	VG901 VG902	MF SA KL HP SSC SMC W Z PC	 ✓ ✓
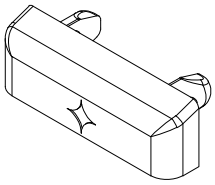	**ACET432** **Drainage Cover Cap (Colour Match)**	8	Pack	VG901 VG902	MF SA KL HP SSC SMC W Z PC	 ✓ ✓ ✓ ✓

T-BARS
ACVG65=2.5mm
ACVG66=3.0mm
ACVL150=4.0mm

Screw (Grub)

MF	= Mill Finish	W	= White
SA	= Silver Anodised	Z	= Black
KL	= Basic Colour		
HP	= Special Colour		
SSC	= Smooth Satin Chrome		
SMC	= Smokey Chrome		
PC	= Polished Chrome		

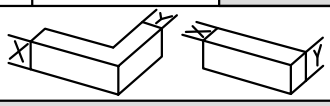

Image	Part Code	Pack	Unit	Application		
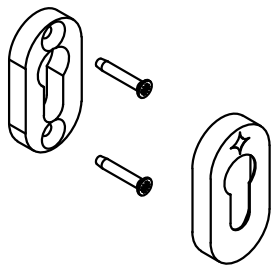	**ACSM015** **Stainless Steel Keep**	**1**	**Each**		MF SA KL HP SSC SMC W Z PC	
	ACVG0904 **Gasket**	**100**	**m**	**VG928** **VG929**	MF SA KL HP SSC SMC W Z PC	
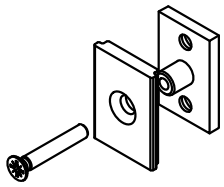	**ACVG0925** **BT Lock Fixing Kit**	**10**	**Pack**	**VG929**	MF SA KL HP SSC SMC W Z PC	
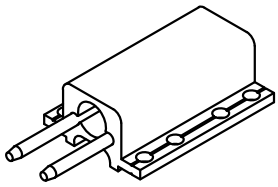	**ACVG0926** **BT Lock Guide**	**1**	**Each**	**VG929**	MF SA KL HP SSC SMC W Z PC	
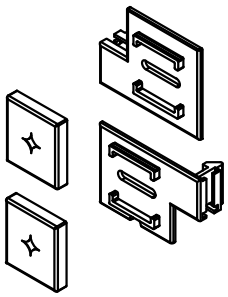	**ACVG0931** **Interlock Cover Caps**	**1**	**Kit**	**VG932**	MF SA KL HP SSC SMC W ✓ Z ✓ PC	

T-BARS
ACVG65=2.5mm
ACVG66=3.0mm
ACVL150=4.0mm

Screw (Grub)

MF = Mill Finish
SA = Silver Anodised
KL = Basic Colour
HP = Special Colour
SSC = Smooth Satin Chrome
SMC = Smokey Chrome
PC = Polished Chrome
W = White
Z = Black

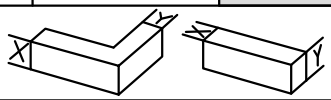

Image	Part Code	Pack	Unit	Application		
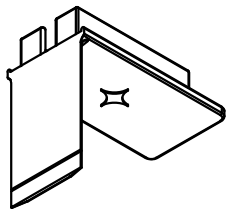	**ACVG0932** **End Cap**	**2**	**pack**	**VG932**	MF	
					SA	
					KL	
					HP	
					SSC	
					SMC	
					W	✓
					Z	✓
					PC	
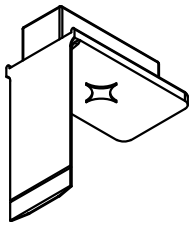	**ACVG0933** **End Cap**	**2**	**pack**	**VG935**	MF	
					SA	
					KL	
					HP	
					SSC	
					SMC	
					W	✓
					Z	✓
					PC	
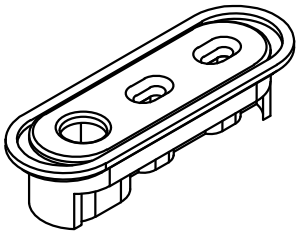	**ACVG0934** **Threshold BT Lock Keep**	**1**	**Each**	**VG918**	MF	
					SA	
					KL	
					HP	
					SSC	
					SMC	
					W	
					Z	
					PC	
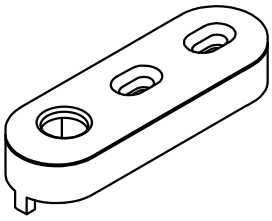	**ACVG0935** **Head BT Lock Keep**	**1**	**Each**	**VG901** **VG902**	MF	
					SA	
					KL	
					HP	
					SSC	
					SMC	
					W	
					Z	
					PC	
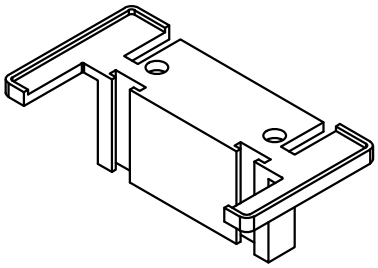	**ACVG0942** **VG942 End Cap**	**2**	**Pack**	**VG942**	MF	
					SA	
					KL	
					HP	
					SSC	
					SMC	
					W	
					Z	
					PC	

T-BARS
ACVG65=2.5mm
ACVG66=3.0mm
ACVL150=4.0mm

Screw (Grub)

MF = Mill Finish
SA = Silver Anodised
KL = Basic Colour
HP = Special Colour
SSC = Smooth Satin Chrome
SMC = Smokey Chrome
PC = Polished Chrome
W = White
Z = Black

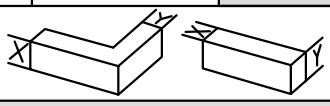

Image	Part Code	Pack	Unit	Application	Colour
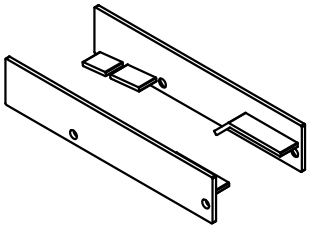	**ACVG0956** **VG956 End Cap**	**2**	**pack**	**VG956**	MF SA KL HP SSC SMC W Z PC
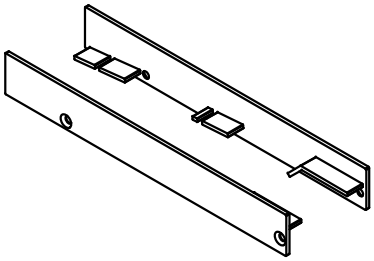	**ACVG0959** **VG959 End Cap**	**2**	**pack**	**VG959**	MF SA KL HP SSC SMC W Z PC
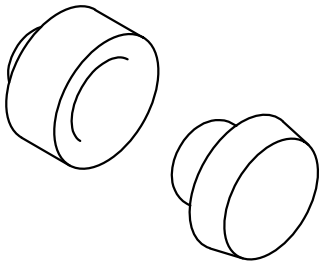	**ACVG0980** **Rubber Buffer**	**1**	**Each**	**VG929** **VG980**	MF SA KL HP SSC SMC W Z PC
					MF SA KL HP SSC SMC W Z PC
					MF SA KL HP SSC SMC W Z PC

T-BARS
ACVG65=2.5mm
ACVG66=3.0mm
ACVL150=4.0mm

Screw (Grub)

MF = Mill Finish
SA = Silver Anodised
KL = Basic Colour
HP = Special Colour
SSC = Smooth Satin Chrome
SMC = Smokey Chrome
PC = Polished Chrome
W = White
Z = Black

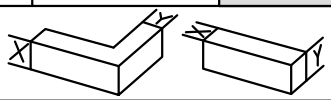

Image	Part Code	Pack	Unit	Application	Colour
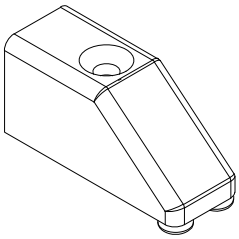	**ACUN348** **Door Stop/Buffer** **Note: SA version is RAL9006**	**1**	**Each**	**VG929**	MF SA KL HP SSC SMC W Z PC
	ACUN3610 **Single Component Adhesive**	**1**	**Each**	**VG923** **VG928** **VG929**	MF SA KL HP SSC SMC W Z PC
	ACUN3612 **Surface Activator (1L)**	**1**	**Each**	**VG923** **VG928** **VG929**	MF SA KL HP SSC SMC W Z PC
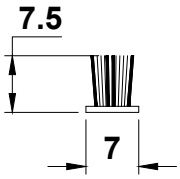	**ACUN3216** **Quadrafin Woolpile**	**100**	**m**	**VG901** **VG902** **VG932** **VG935** **VG942**	MF SA KL HP SSC SMC W Z PC
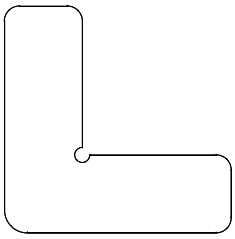	**WCA106** **Large Stainless Steel Chevrons**	**50**	**pack**	**VG901** **VG902**	MF SA KL HP SSC SMC W Z PC

T-BARS
ACVG65=2.5mm
ACVG66=3.0mm
ACVL150=4.0mm

Screw (Grub)

MF	**= Mill Finish**	**W**	**= White**
SA	**= Silver Anodised**	**Z**	**= Black**
KL	**= Basic Colour**		
HP	**= Special Colour**		
SSC	**= Smooth Satin Chrome**		
SMC	**= Smokey Chrome**		
PC	**= Polished Chrome**		

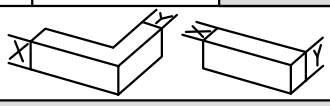

Image	Part Code	Pack	Unit	Application	Colour
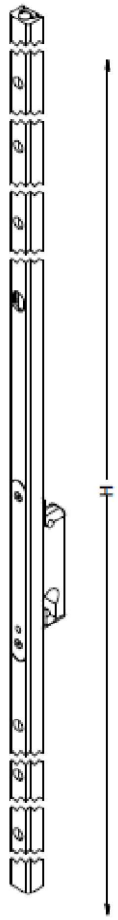	**BT Lock (Cylinder operated)** Lock / Sash height ACSZ040 ≤2366 mm. ACSZ041 ≤2700 mm. ACSZ042 ≤3100 mm. **Only to lock into outerframe**	1 1 1	Each Each Each	VG929 ACVG0926 ACVG0935 ACVG0936	MF SA KL HP SSC SMC W Z PC
					MF SA KL HP SSC SMC W Z PC
					MF SA KL HP SSC SMC W Z PC

T-BARS
ACVG65=2.5mm
ACVG66=3.0mm
ACVL150=4.0mm

Screw (Grub)

MF	= Mill Finish	W	= White
SA	= Silver Anodised	Z	= Black
KL	= Basic Colour		
HP	= Special Colour		
SSC	= Smooth Satin Chrome		
SMC	= Smokey Chrome		
PC	= Polished Chrome		

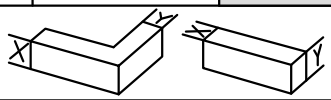

Image	Part Code	Pack	Unit	Application	Colour
	ACSZ971 **Internal Pull Handle**	1	Each		MF SA KL HP SSC SMC W Z PC
	ACSZ972 **External Pull Handle**	1	Each		MF SA KL HP SSC SMC W Z PC
	ACSZ973 **Internal Pull Handle (Single Fixing)**	1	Each		MF SA KL HP SSC SMC W Z PC
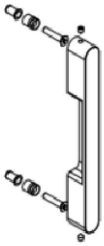	**ACSZ981** **Internal Pull Handle with Grip**	1	Each		MF SA KL HP SSC SMC W Z PC
	ACSZ982 **External Pull Handle with Grip**	1	Each		MF SA KL HP SSC SMC W Z PC

T-BARS
ACVG65=2.5mm
ACVG66=3.0mm
ACVL150=4.0mm

Screw (Grub)

MF = Mill Finish
SA = Silver Anodised
KL = Basic Colour
HP = Special Colour
SSC = Smooth Satin Chrome
SMC = Smokey Chrome
PC = Polished Chrome
W = White
Z = Black

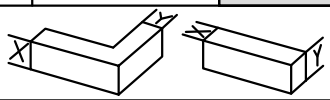

Image	Part Code	Pack	Unit	Application	Colour	
	ACSZ983 **External Pull Handle with Grip**	**1**	**Each**		MF	✓
					SA	
					KL	
					HP	
					SSC	
					SMC	
					W	
					Z	
					PC	
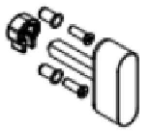	**ACSZ990** **Turn Knob with Square Spindle**	**1**	**Each**		MF	
					SA	
					KL	
					HP	
					SSC	
					SMC	
					W	
					Z	
					PC	
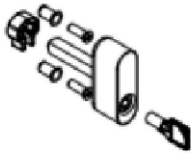	**ACSZ991** **Turn Knob with Square Spindle**	**1**	**Each**		MF	
					SA	
					KL	
					HP	
					SSC	
					SMC	
					W	
					Z	
					PC	
					MF	
					SA	
					KL	
					HP	
					SSC	
					SMC	
					W	
					Z	
					PC	
					MF	
					SA	
					KL	
					HP	
					SSC	
					SMC	
					W	
					Z	
					PC	

T-BARS
ACVG65=2.5mm
ACVG66=3.0mm
ACVL150=4.0mm

Screw (Grub)

MF = Mill Finish
SA = Silver Anodised
KL = Basic Colour
HP = Special Colour
SSC = Smooth Satin Chrome
SMC = Smokey Chrome
PC = Polished Chrome
W = White
Z = Black

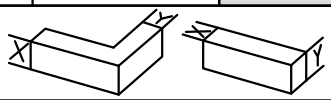

Image	Part Code	Pack	Unit	Application	Colour	
	ACMX09700 **Alu. Polish**	**1**	**each**		MF	✓
					SA	
					KL	
					HP	
					SSC	
					SMC	
					W	
					Z	
					PC	
	ACMX09761 **Maxi Gloss**	**1**	**each**		MF	
					SA	
					KL	
					HP	
					SSC	
					SMC	
					W	
					Z	
					PC	
	ACMX09762 **Alu. Bright**	**1**	**each**		MF	
					SA	
					KL	
					HP	
					SSC	
					SMC	
					W	
					Z	
					PC	
	ACMX09763 **Teflon Spray**	**1**	**each**		MF	
					SA	
					KL	
					HP	
					SSC	
					SMC	
					W	
					Z	
					PC	
	ACMX09764 **Maxi Clean**	**1**	**each**		MF	
					SA	
					KL	
					HP	
					SSC	
					SMC	
					W	
					Z	
					PC	

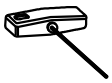

T-BARS
ACVG65=2.5mm
ACVG66=3.0mm
ACVL150=4.0mm

Screw (Grub)

MF = Mill Finish
SA = Silver Anodised
KL = Basic Colour
HP = Special Colour
SSC = Smooth Satin Chrome
SMC = Smokey Chrome
PC = Polished Chrome
W = White
Z = Black

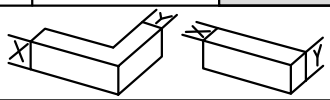

Invisoglide

STANDARD ACCESSORIES

Image	Part Code	Pack	Unit	Application	Colour
	ACMX09765 **Alu. Cleaner**	**1**	**each**		MF SA KL HP SSC SMC W Z PC
	ACMX09770 **Roll & Wrap 100mm**	**1**	**each**		MF SA KL HP SSC SMC W Z PC
	ACMX09775 **Grip Handwrap**	**1**	**each**		MF SA KL HP SSC SMC W Z PC
	ACMX09801 **Protective Tape 50mm**	**1**	**each**		MF SA KL HP SSC SMC W Z PC
	ACMX09802 **Protective Tape 70mm**	**1**	**each**		MF SA KL HP SSC SMC W Z PC

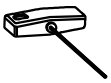

T-BARS
ACVG65=2.5mm
ACVG66=3.0mm
ACVL150=4.0mm

Screw (Grub)

MF = Mill Finish
SA = Silver Anodised
KL = Basic Colour
HP = Special Colour
SSC = Smooth Satin Chrome
SMC = Smokey Chrome
PC = Polished Chrome
W = White
Z = Black

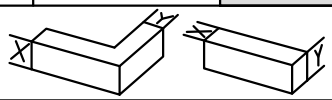

Image	Part Code	Pack	Unit	Application	Colour	
	ACMX09803 **Protective Tape 100mm**	**1**	**each**		MF	
					SA	
					KL	
					HP	
					SSC	
					SMC	
					W	
					Z	
					PC	
	ACMX09830 **Rubber Sealant**	**1**	**each**		MF	
					SA	
					KL	
					HP	
					SSC	
					SMC	
					W	
					Z	
					PC	
	ACSIL04 **Sealing Glue** **Order with suffix of KL colour (eg.ACSIL04KL005) or BL=Black/WP=White/ CL=Clear**	**1**	**each**		MF	
					SA	
					KL	✓
					HP	
					SSC	
					SMC	
					W	✓
					Z	✓
					PC	
	ACSIL08 **Silicon Gun**	**1**	**each**		MF	
					SA	
					KL	
					HP	
					SSC	
					SMC	
					W	
					Z	
					PC	
	ACSIL013 **Glue for Mitre**	**1**	**each**		MF	
					SA	
					KL	
					HP	
					SSC	
					SMC	
					W	
					Z	
					PC	

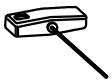

T-BARS
ACVG65=2.5mm
ACVG66=3.0mm
ACVL150=4.0mm

Screw (Grub)

MF = Mill Finish
SA = Silver Anodised
KL = Basic Colour
HP = Special Colour
SSC = Smooth Satin Chrome
SMC = Smokey Chrome
PC = Polished Chrome
W = White
Z = Black

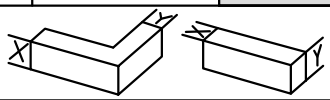

Image	Part Code	Pack	Unit	Application	Colour	
	ACSIL014 **Anti-Corrosion Coating**	**1**	**each**		MF	✓
					SA	
					KL	
					HP	
					SSC	
					SMC	
					W	
					Z	
					PC	
	ACUN3900 **Gasket Roller**	**1**	**each**		MF	
					SA	
					KL	
					HP	
					SSC	
					SMC	
					W	
					Z	
					PC	
					MF	
					SA	
					KL	
					HP	
					SSC	
					SMC	
					W	
					Z	
					PC	
					MF	
					SA	
					KL	
					HP	
					SSC	
					SMC	
					W	
					Z	
					PC	
					MF	
					SA	
					KL	
					HP	
					SSC	
					SMC	
					W	
					Z	
					PC	

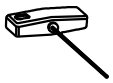

T-BARS
ACVG65=2.5mm
ACVG66=3.0mm
ACVL150=4.0mm

Screw (Grub)

MF = Mill Finish
SA = Silver Anodised
KL = Basic Colour
HP = Special Colour
SSC = Smooth Satin Chrome
SMC = Smokey Chrome
PC = Polished Chrome
W = White
Z = Black

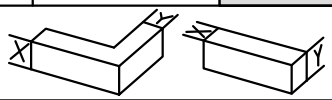

Section C

Sections

Scale Elevations

Invisoglide

Scale Elevations

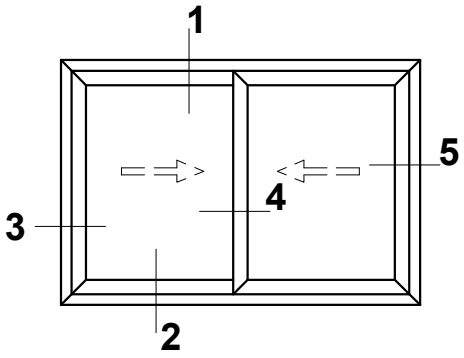

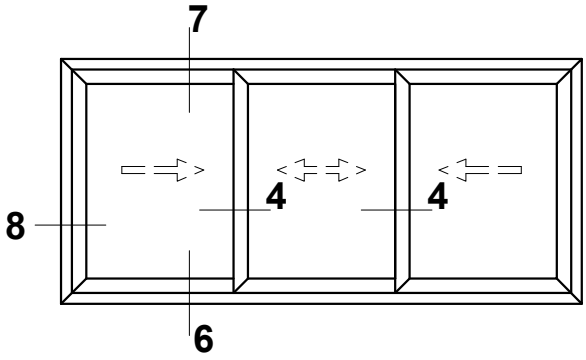

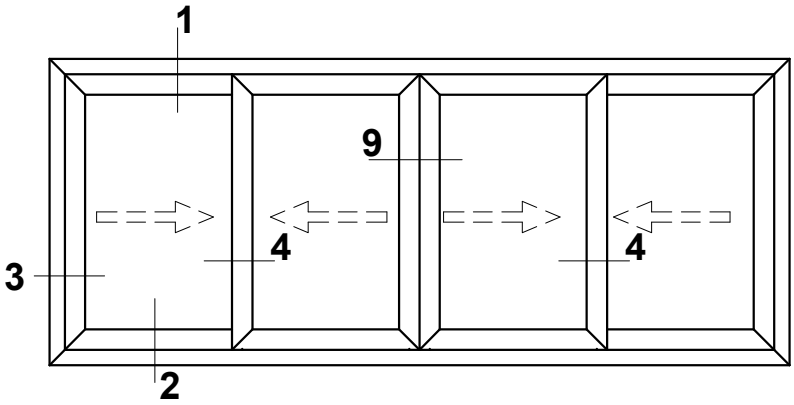

Do Not Scale From This Drawing

Invisoglide

Detail 1

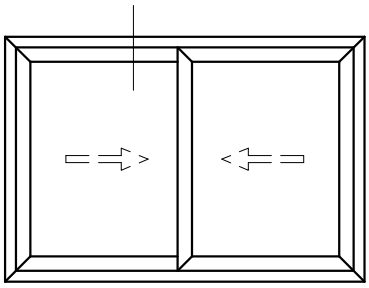

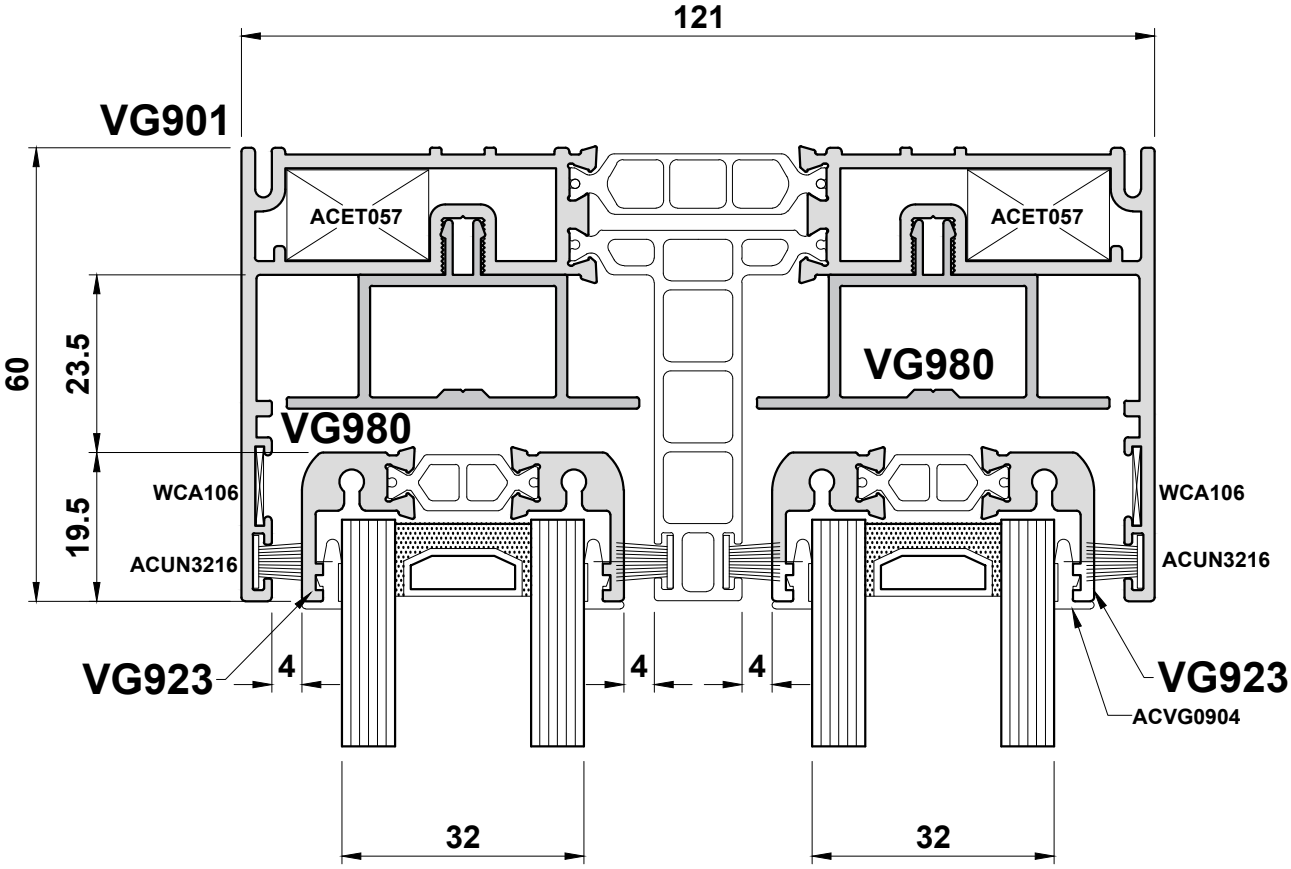

Do Not Scale From This Drawing

Invisoglide

Detail 2

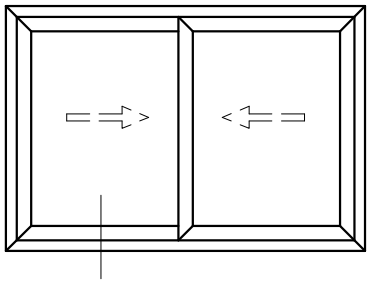

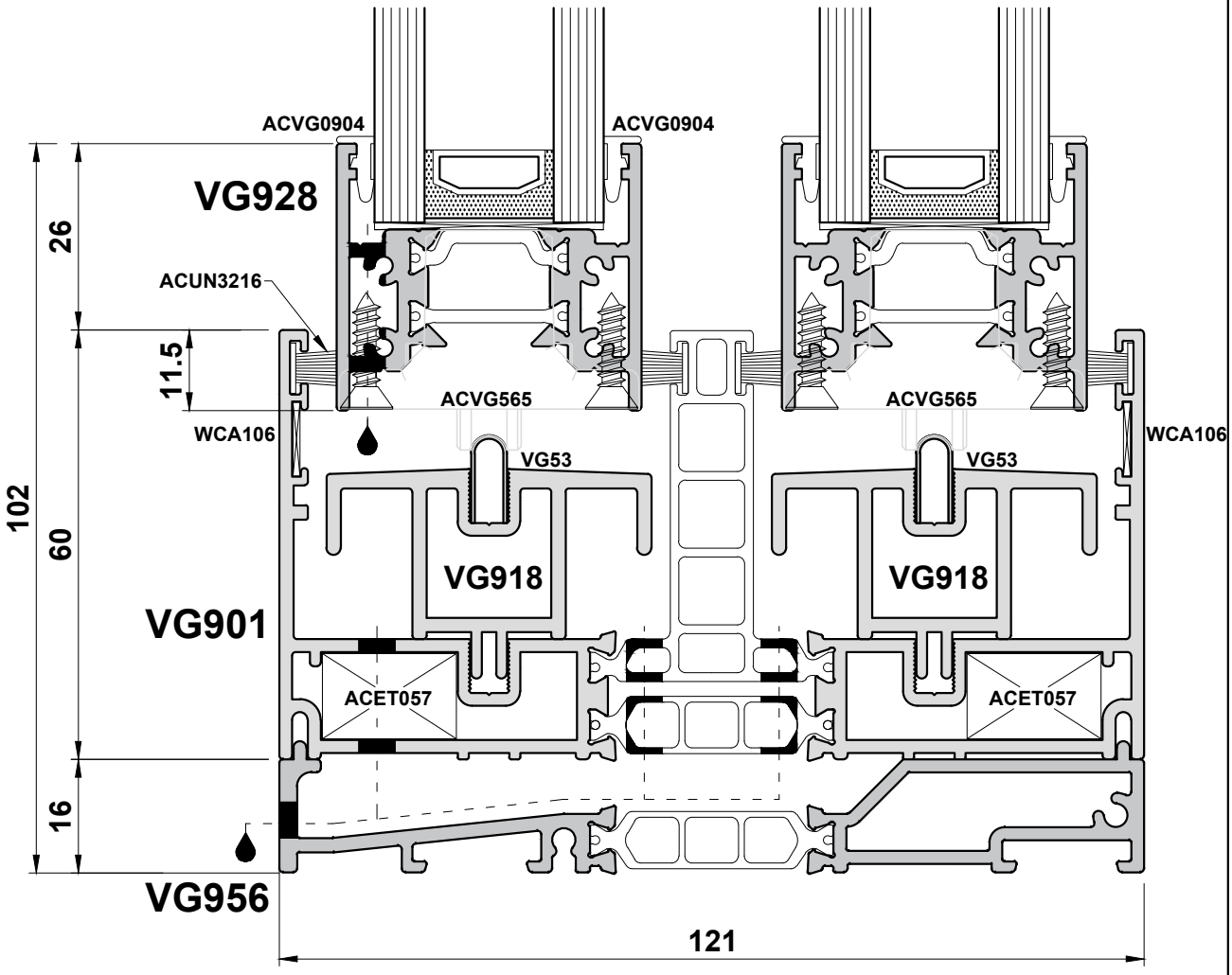

Do Not Scale From This Drawing

Detail 3

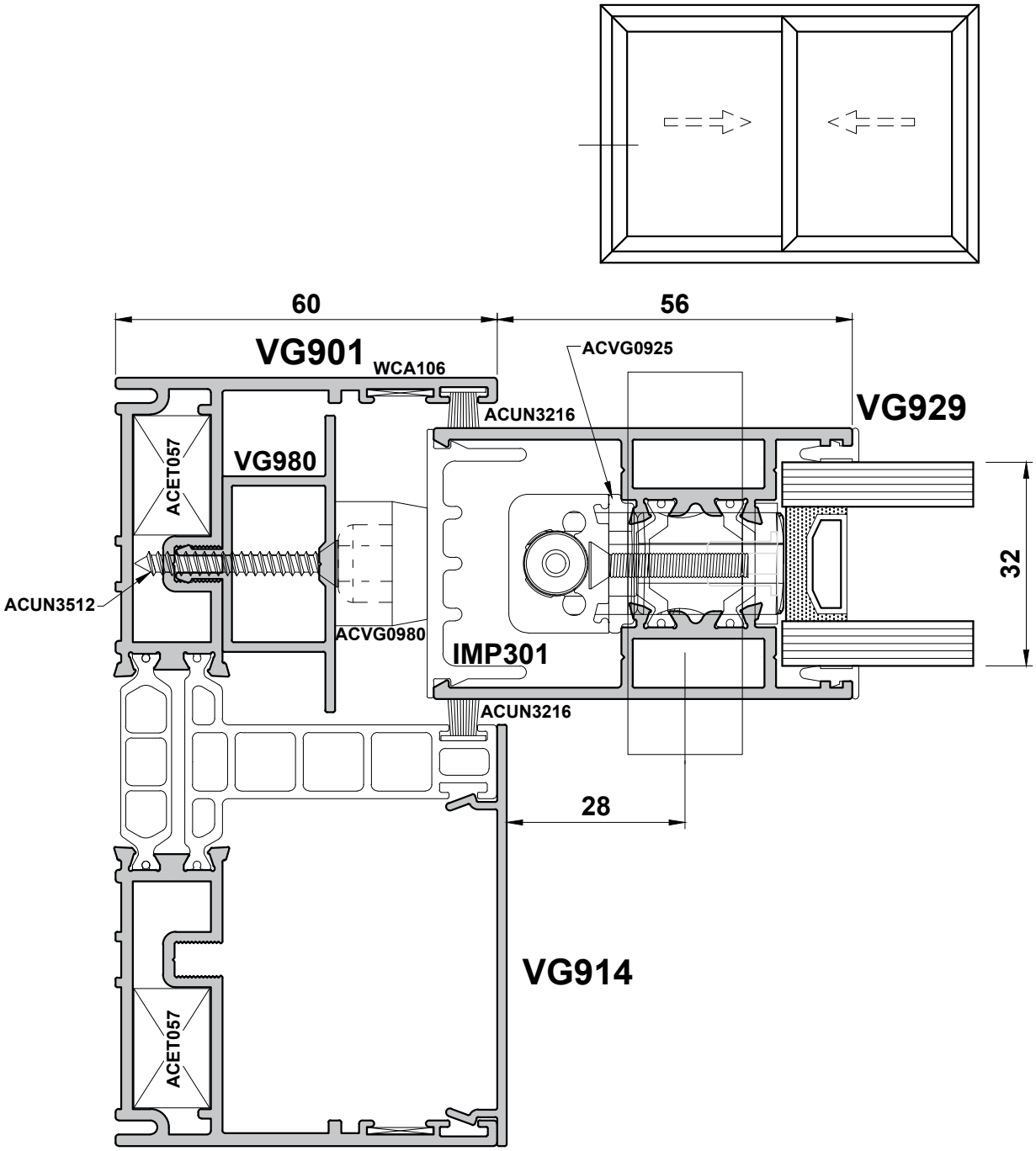

Do Not Scale From This Drawing

Invisoglide

Detail 4A

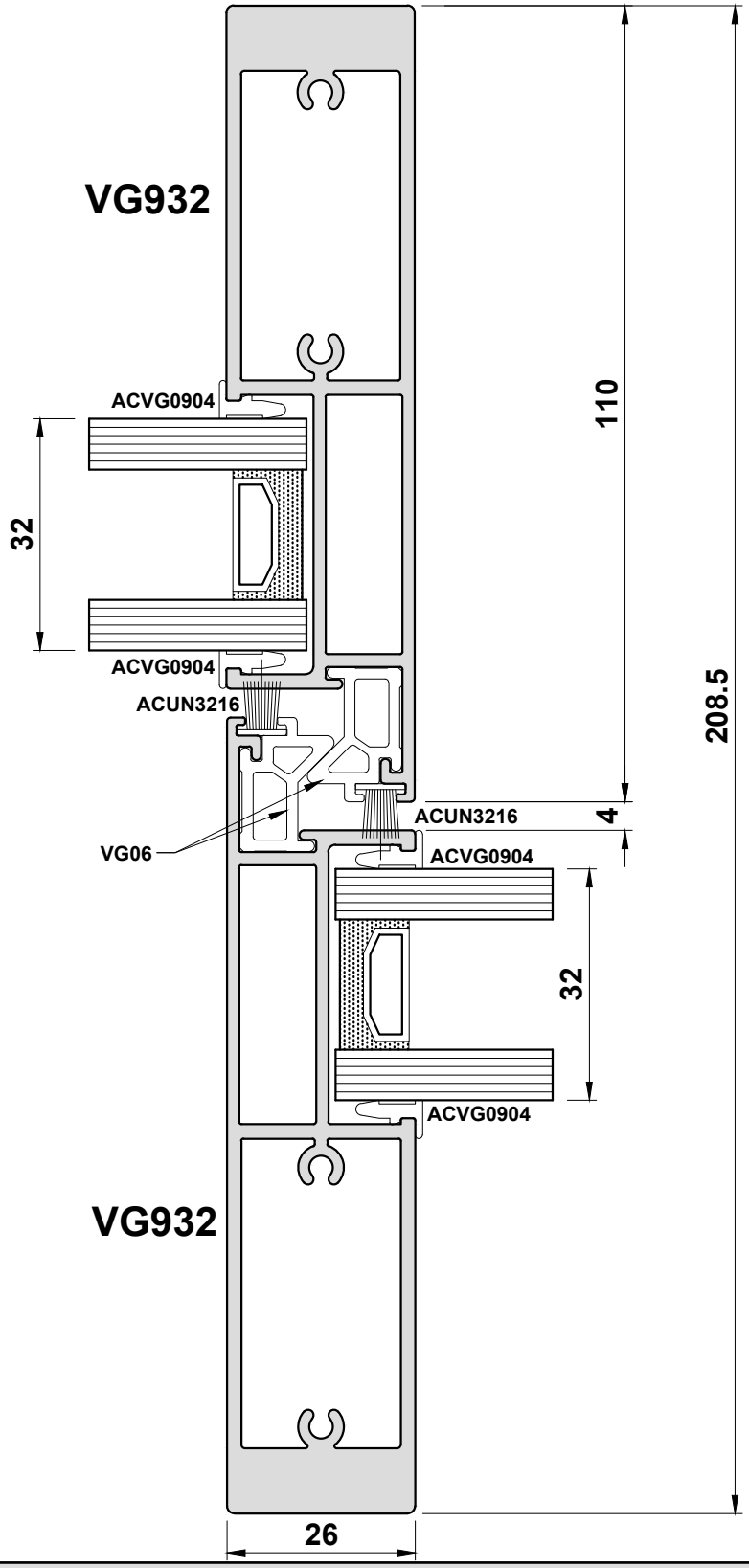

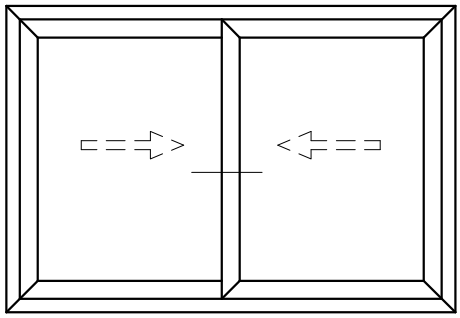

Do Not Scale From This Drawing

Detail 4B

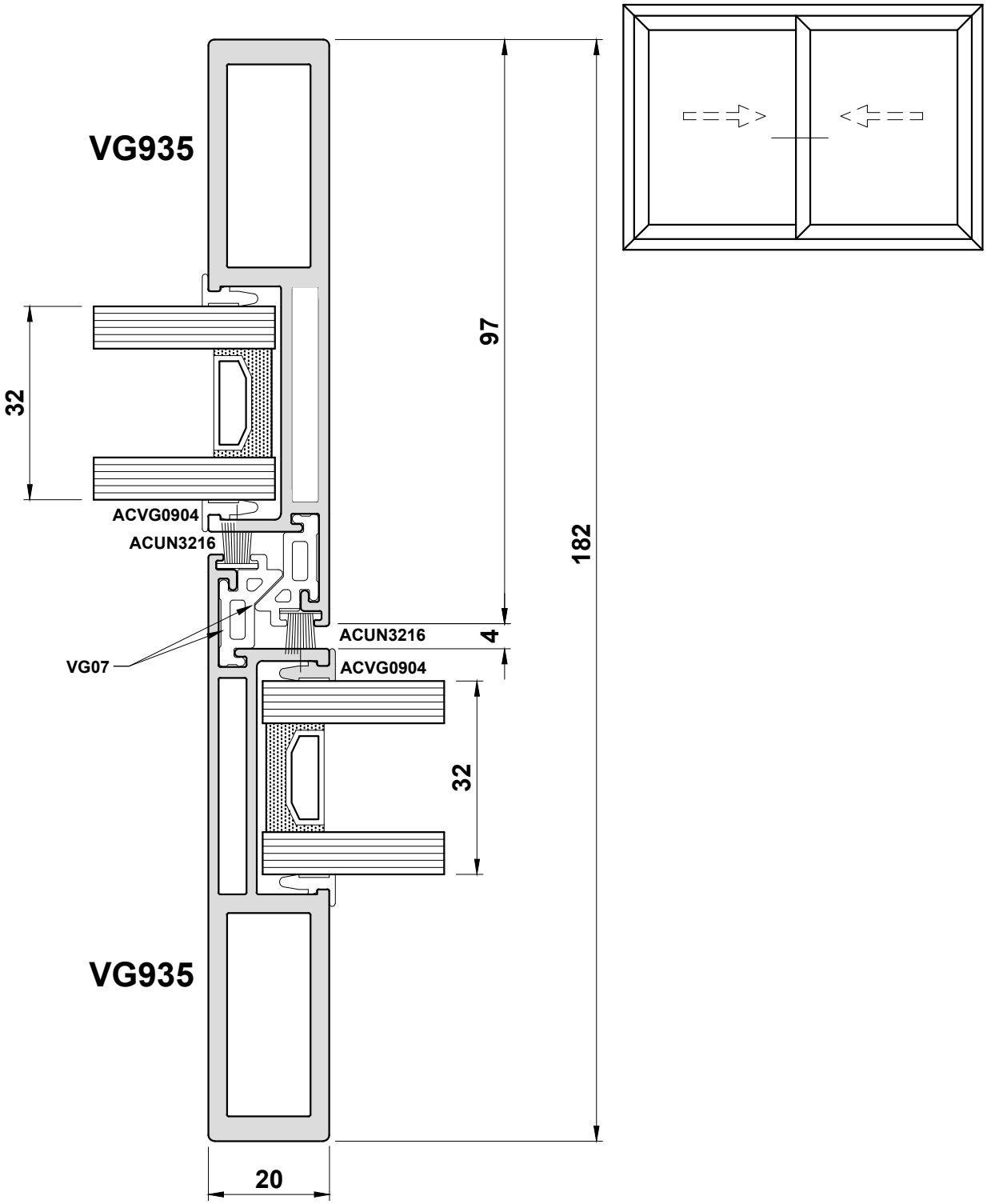

Do Not Scale From This Drawing

Invisoglide

Detail 5

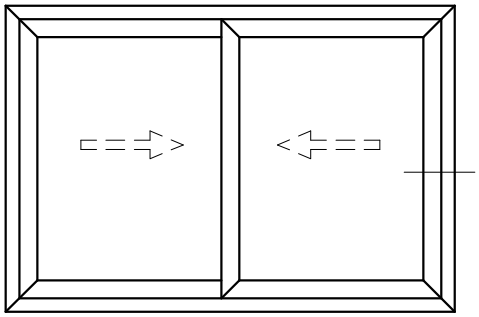

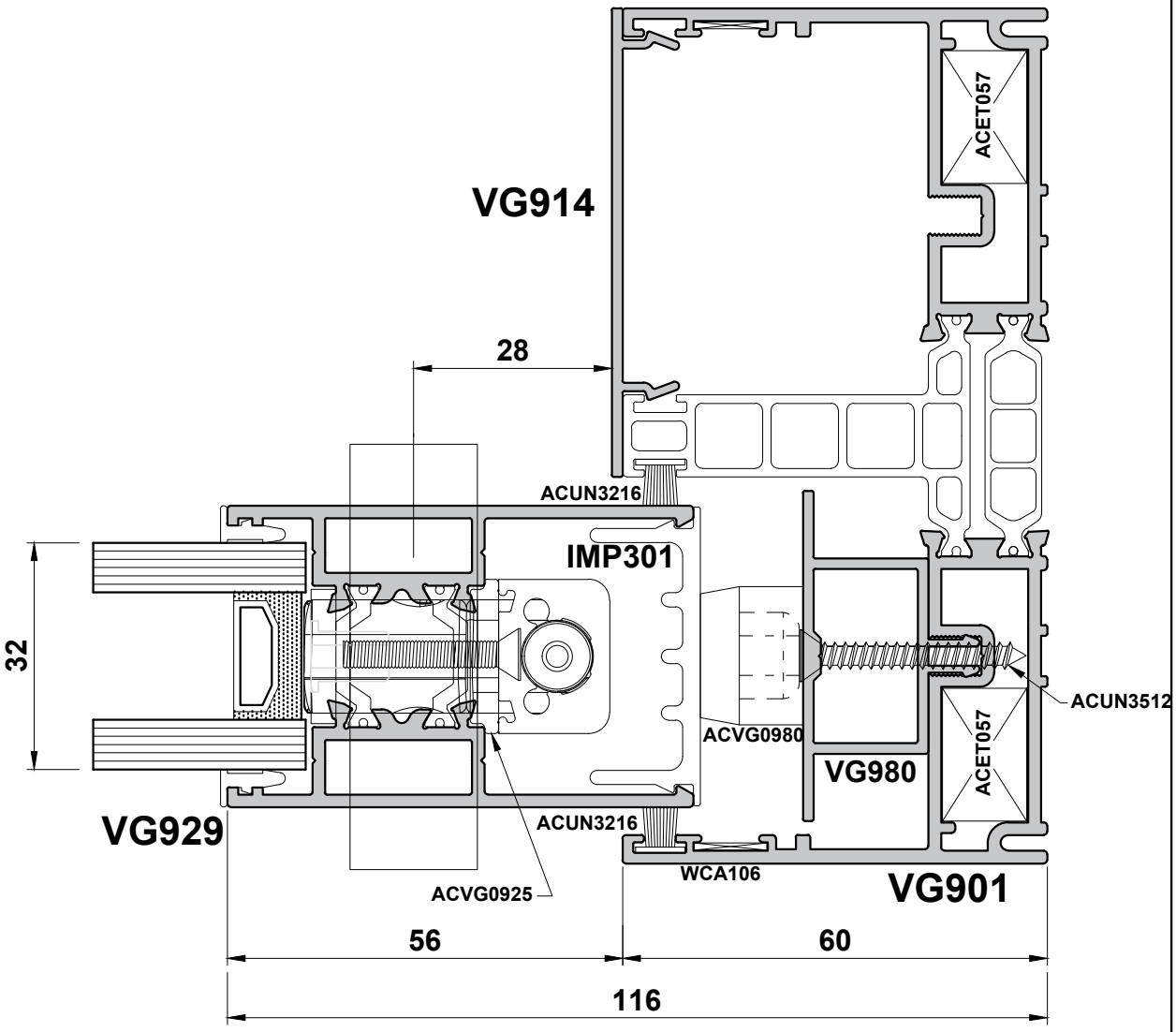

Do Not Scale From This Drawing

Detail 6

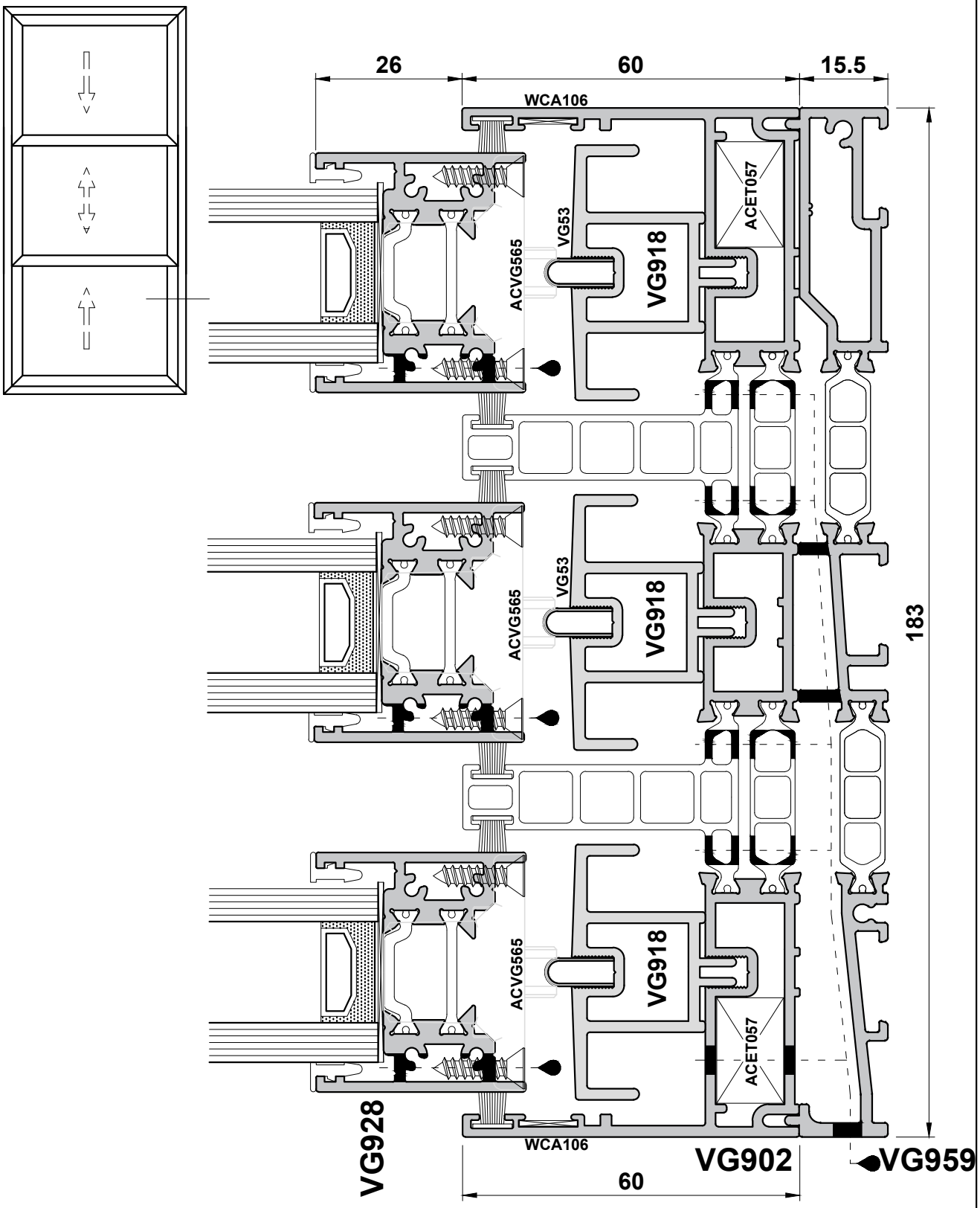

Do Not Scale From This Drawing

Detail 7A

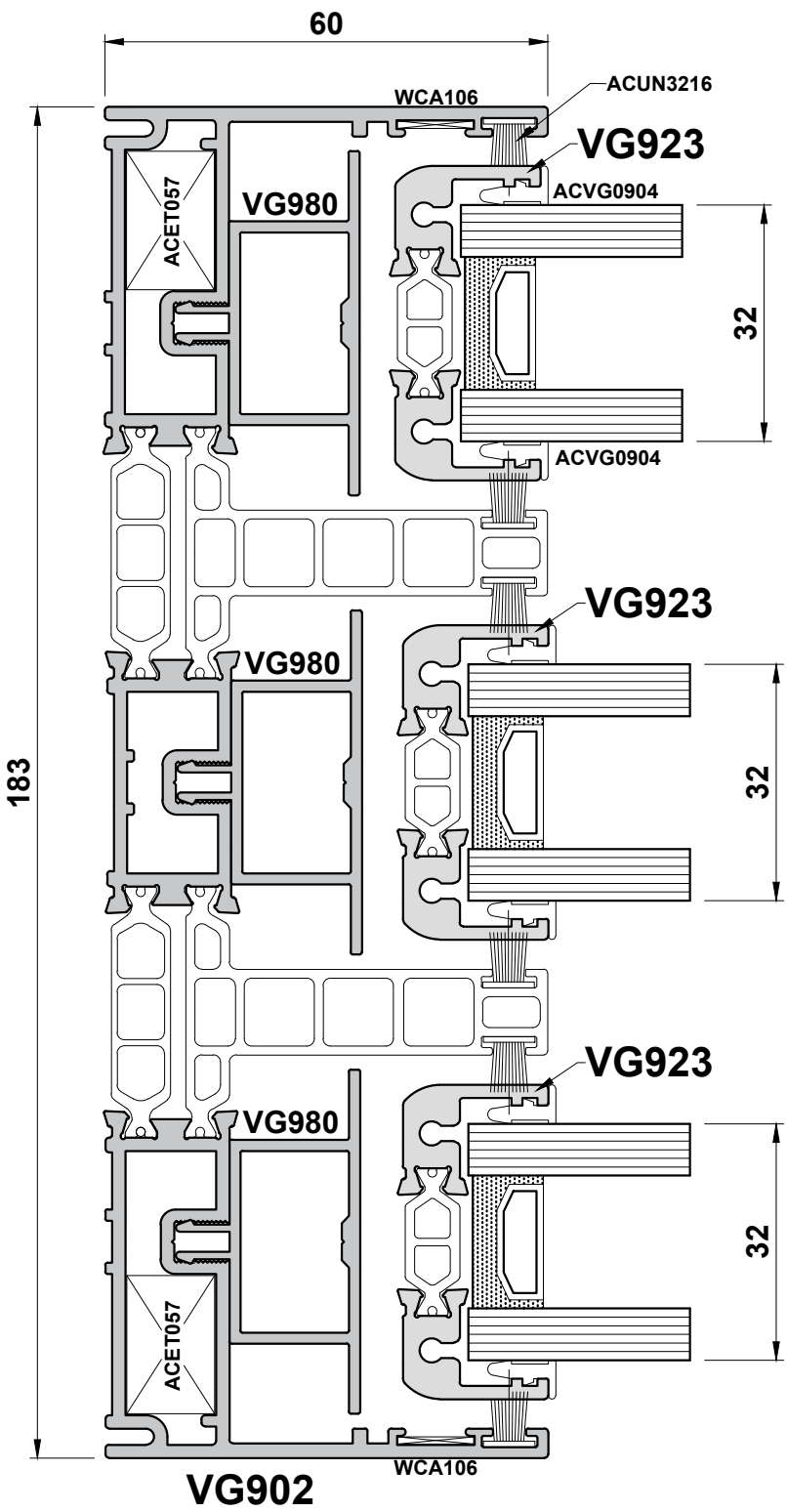

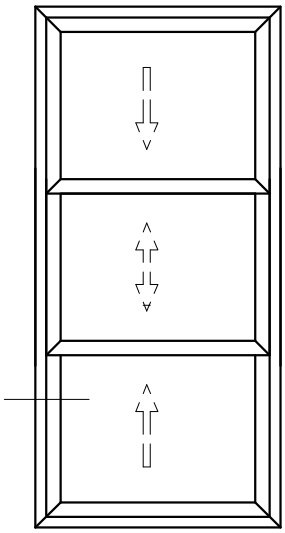

Do Not Scale From This Drawing

Detail 8

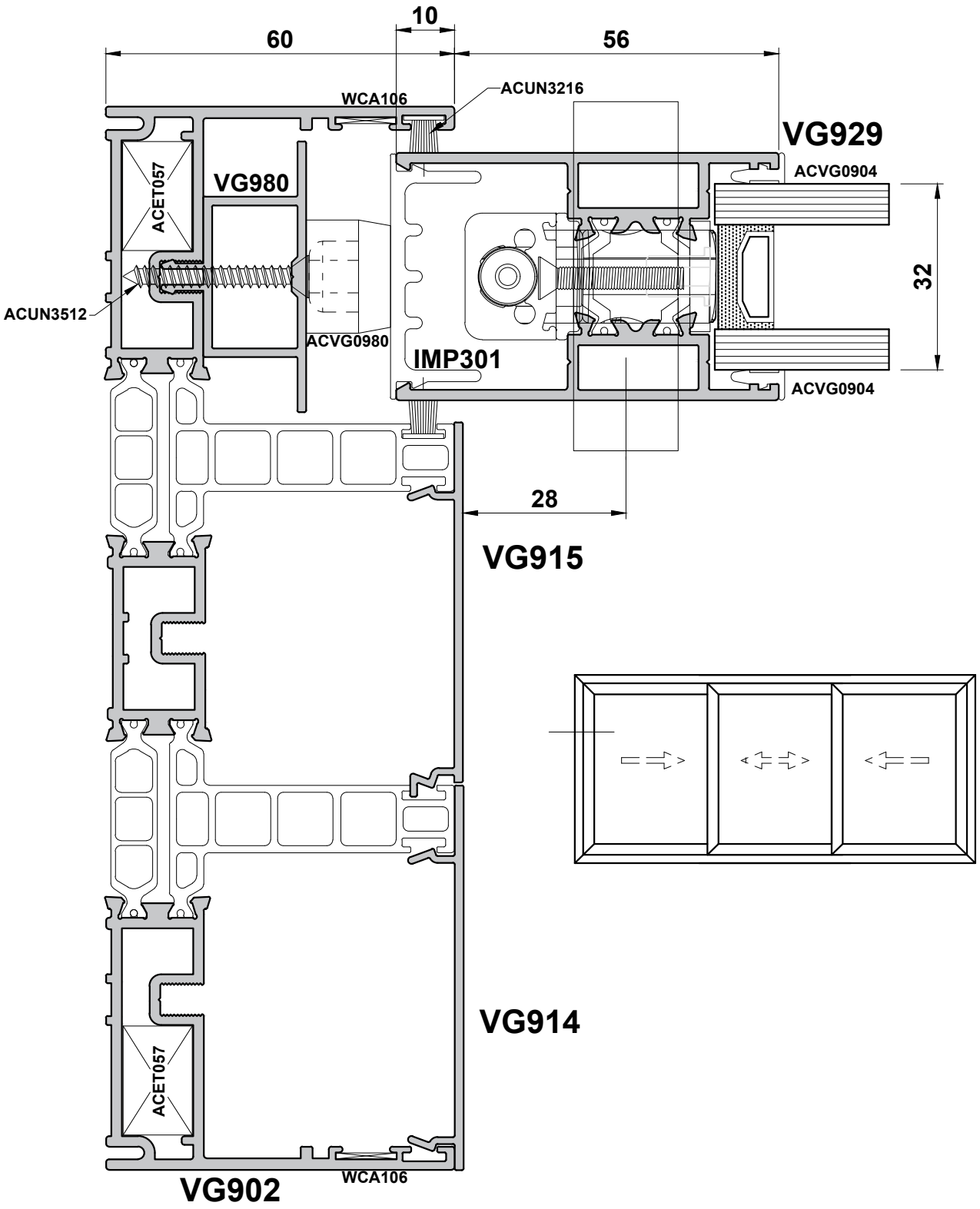

Do Not Scale From This Drawing

Invisoglide

Detail 9

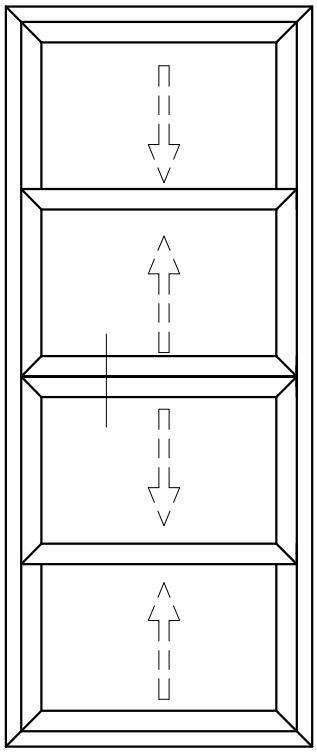

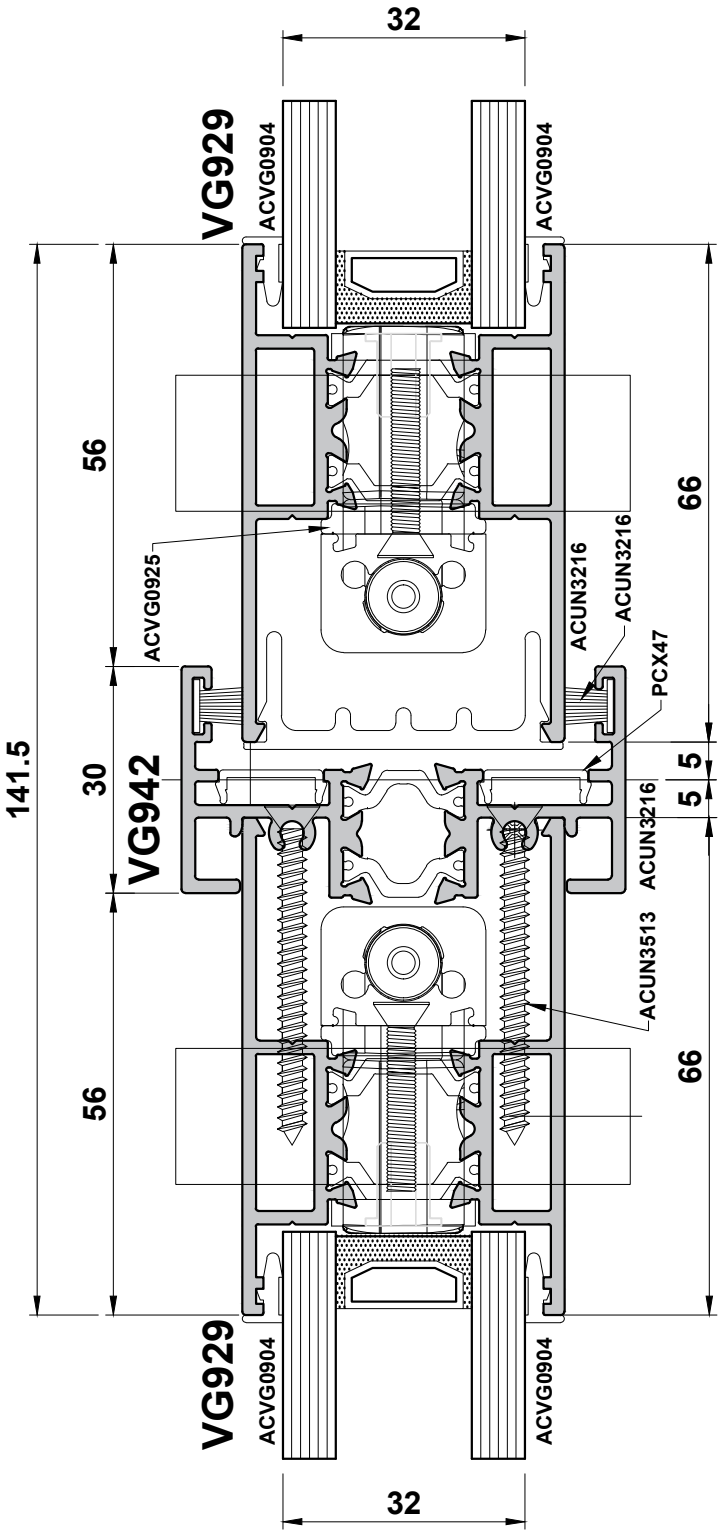

Do Not Scale From This Drawing

Invisoglide

Do Not Scale From This Drawing

Section D

GENERAL INFORMATION - STATICS

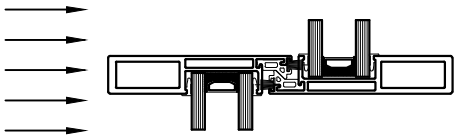

WIND

The position of the axes is an indication for the use and application of the moments of inertia (Ix and Iy) and the section modulus (Wx and Wy). We always choose the values of the axis perpendicular to the load to resist it.

- **To resist the wind loads we use the values Ix and Wx.**

EXAMPLE

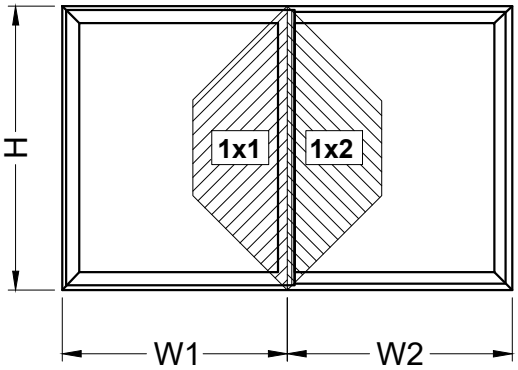

H = 250cm

W1 = 100cm

W2 = 100cm

P = 1000 Pa (wind pressure)

1) Determine Ixx value for the interlock and meeting stile (if required) using the Specification Wizard

Ixx = 58.1 cm4

2) Determine profile combinations

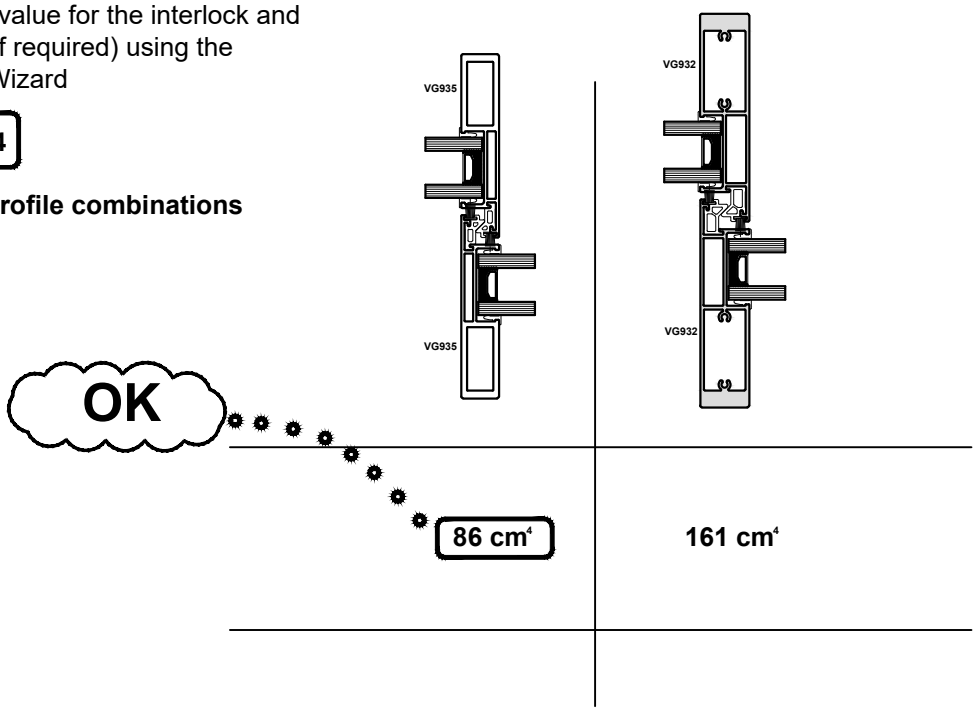

PROFILE COMBINATIONS - IX-SLIM INTERLOCKS : STATICS

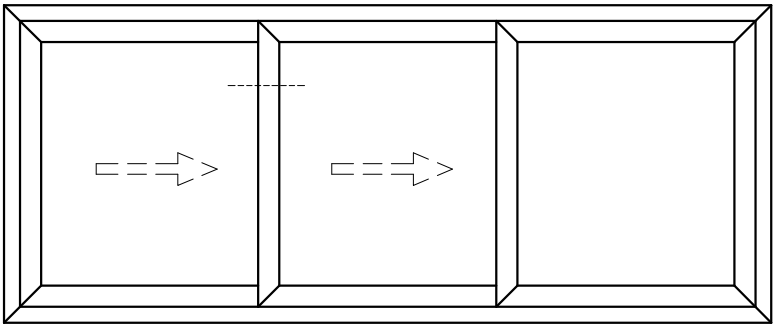

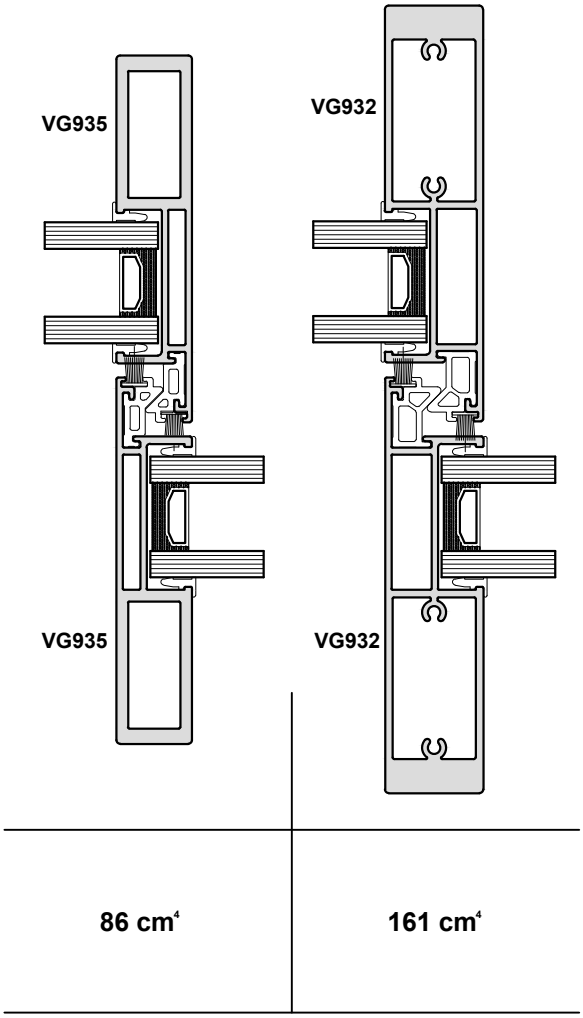

* Important Note:
For exposed locations, please contact the Technical Department at Smart Systems Ltd Tel: 01934 876100

Section E

E VG

Construction Drawings

Corner Joint Details..... E03
Drainage..... E04 - E05
ACVG565 Roller Details..... E06
VG929 Assembly..... E07
VG932 & VG935 Interlock Machining..... E08 - E09
Sash Bonding..... E10
BT Lock Assembly..... E11 - E12
Four Pane Meeting Stile Details..... E13
ACVG0980 Location..... E14
ACUN348 Fitting..... E15
Example Threshold Detail..... E16

Corner Joint Details

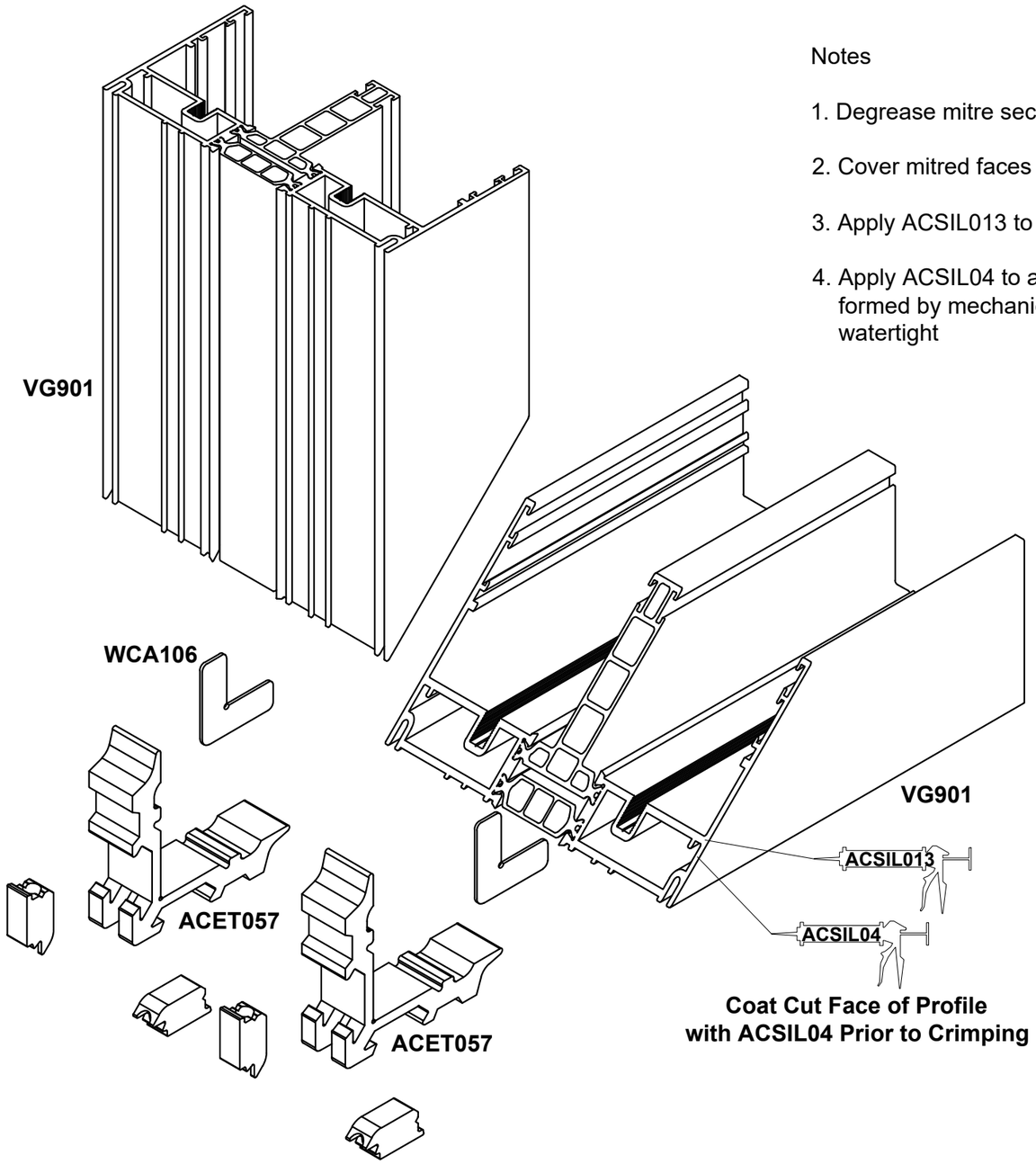

Coat Cut Face of Profile
with ACSIL04 Prior to Crimping

Notes

1. Degrease mitre sections
2. Cover mitred faces with ACSIL04
3. Apply ACSIL013 to cleat chambers
4. Apply ACSIL04 to any fractures formed by mechanical joint to make watertight

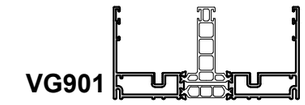

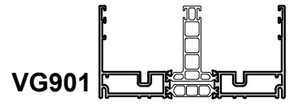

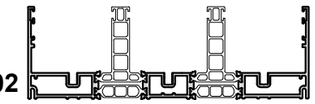

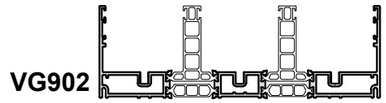

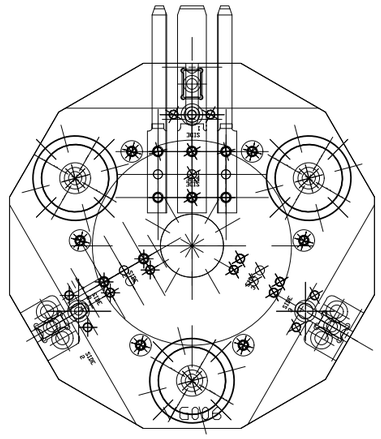

ACVG907
Punch Tool

Do Not Scale From This Drawing

Drainage

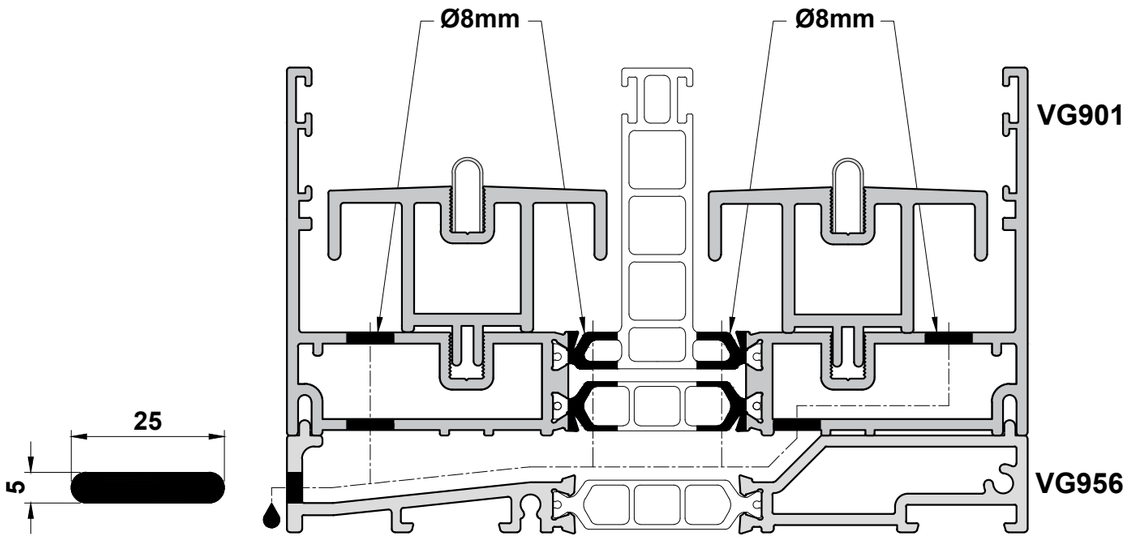

*After machining, all exposed aluminium should be coated using ACSIL014 or painted to match frame.
(Consider all following sheets where machining occurs)

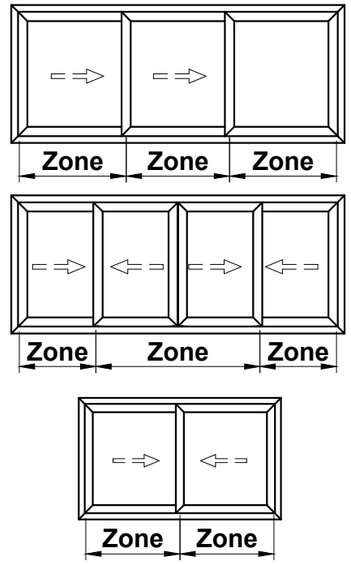

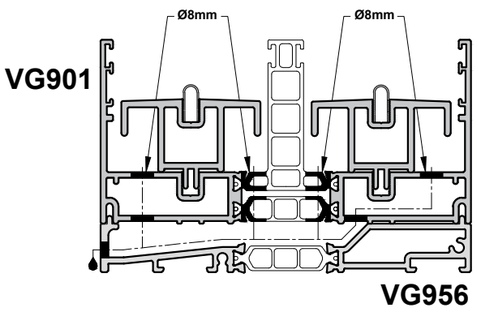

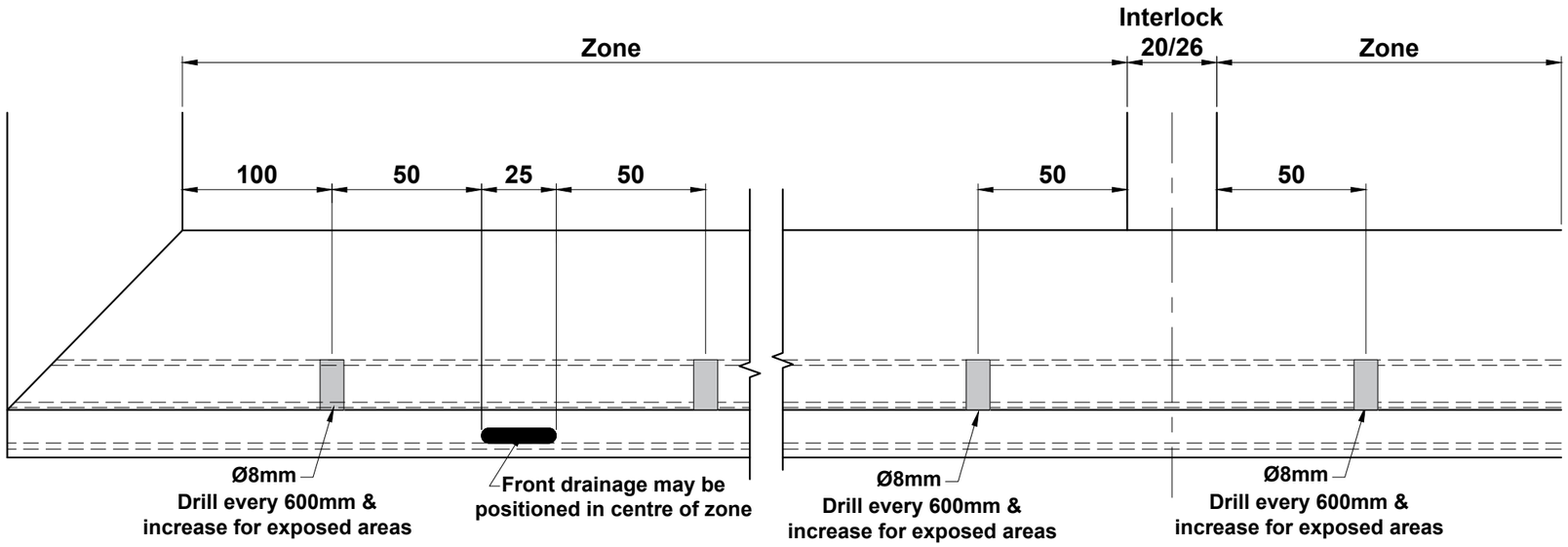

Do Not Scale From This Drawing

Vent Drainage & Decompression

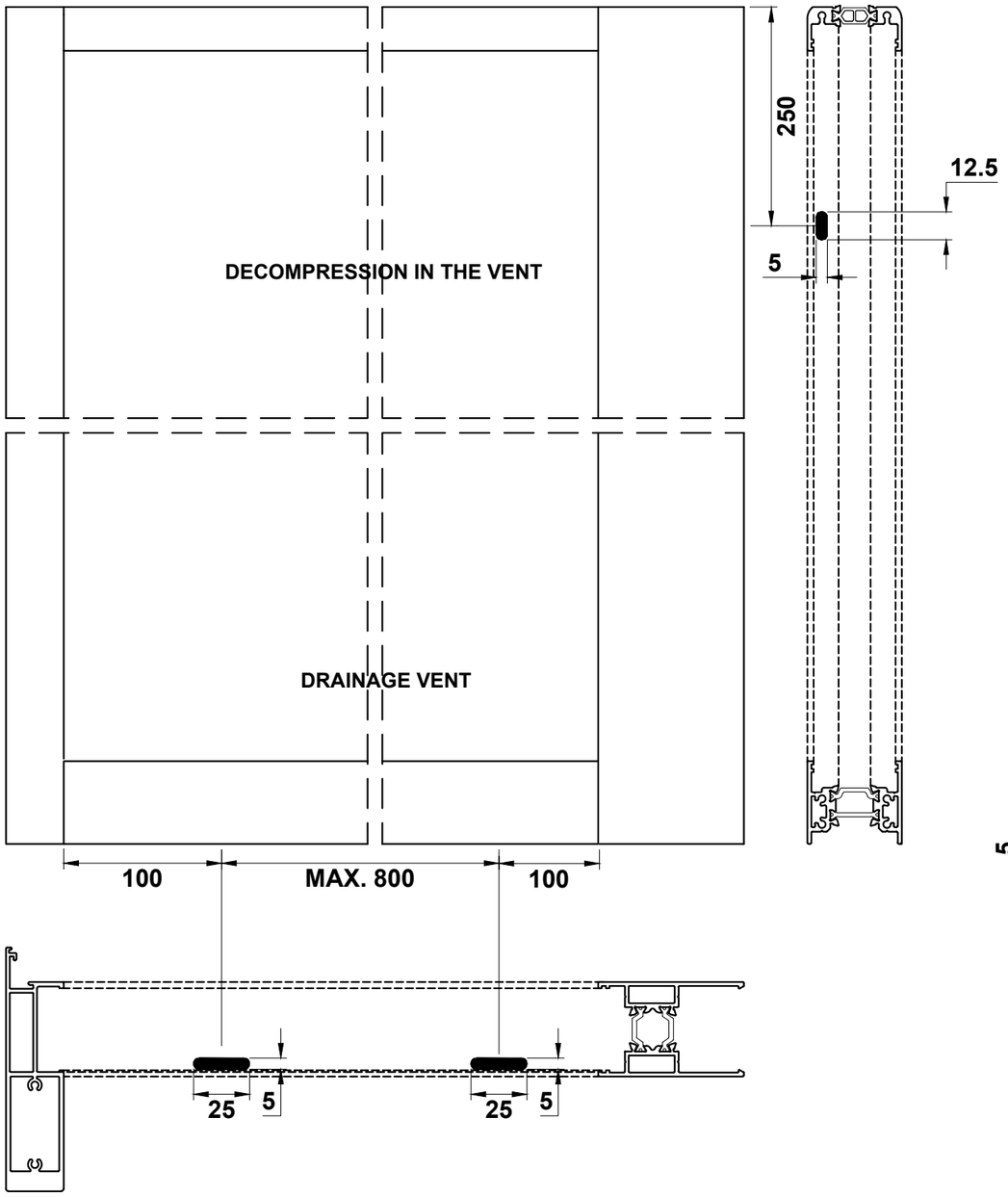

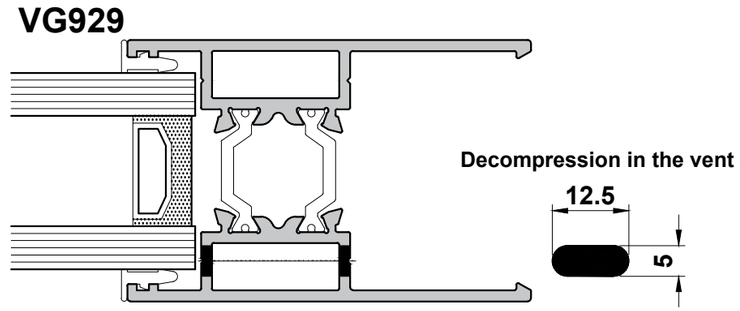

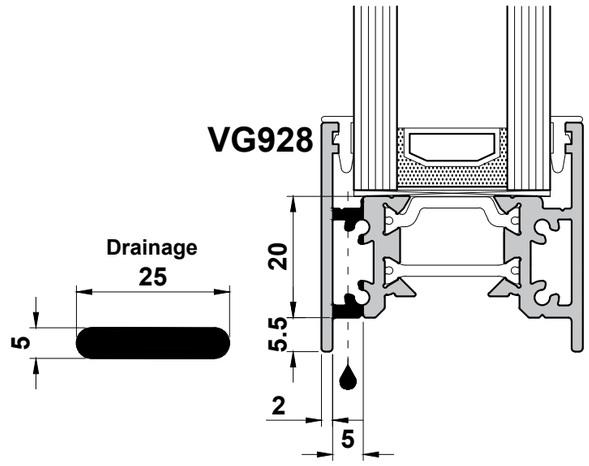

Do Not Scale From This Drawing

ACVG565 Details

ACVG565 Positions

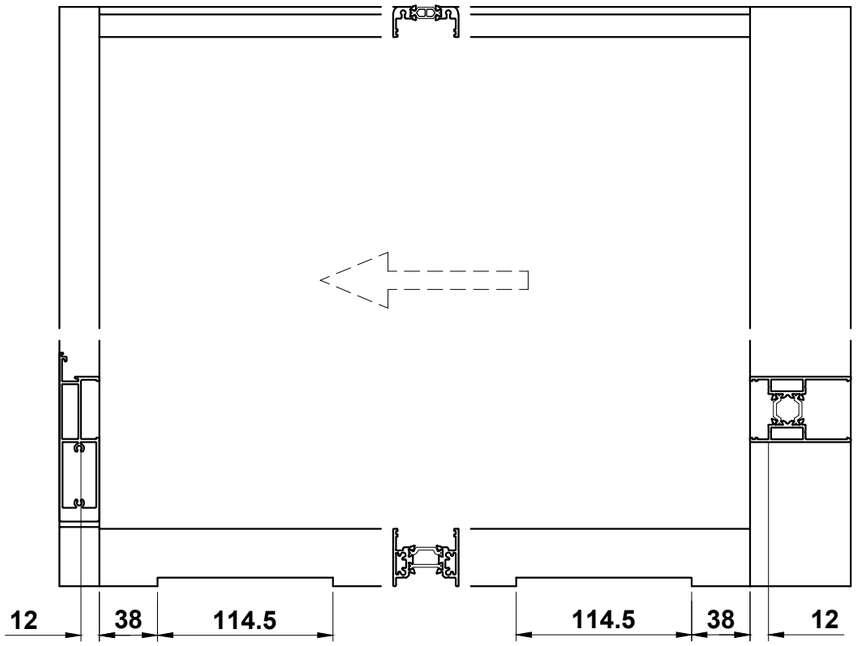

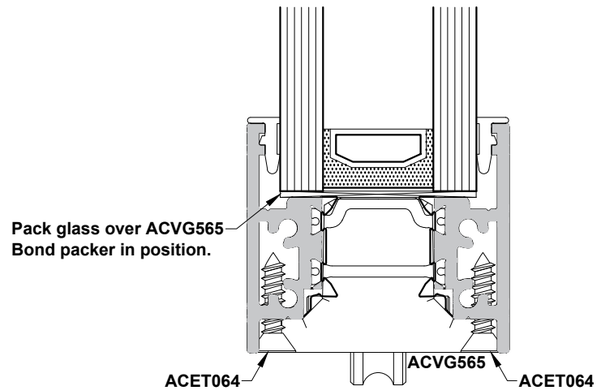

Max Sash Weight: 250kg

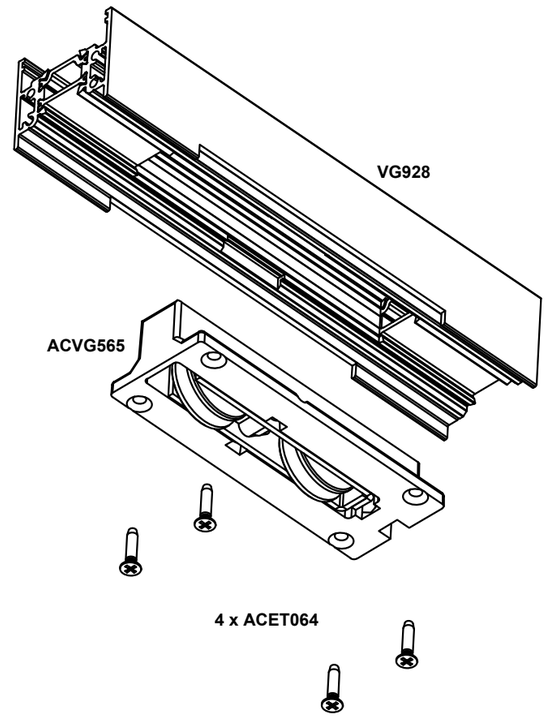

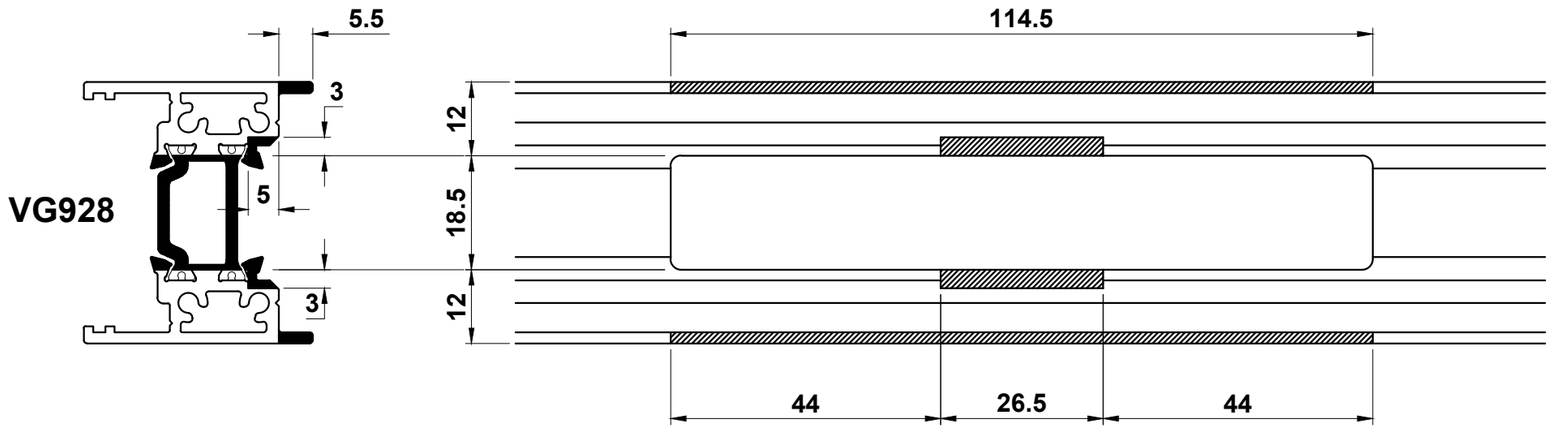

Do Not Scale From This Drawing

VG929 Assembly

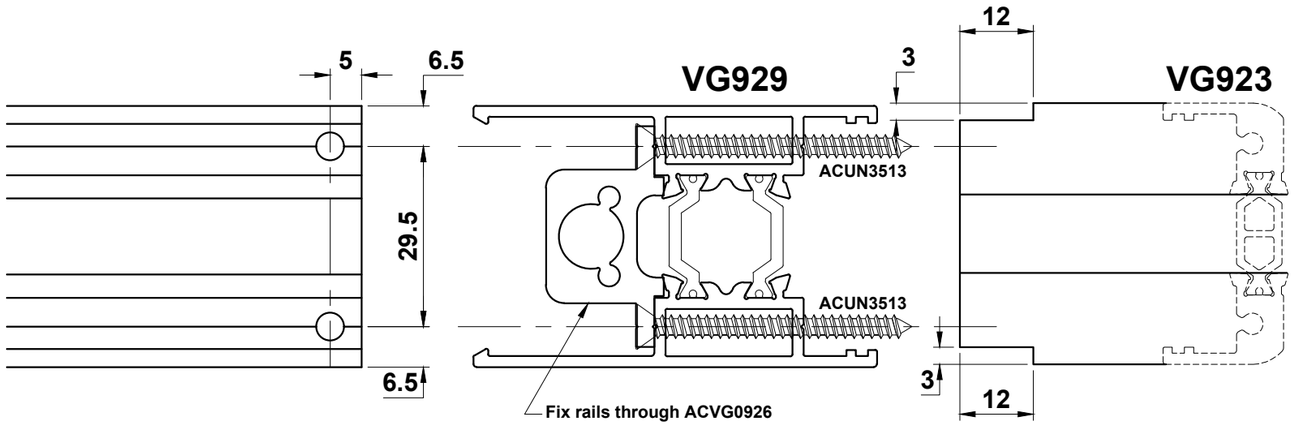

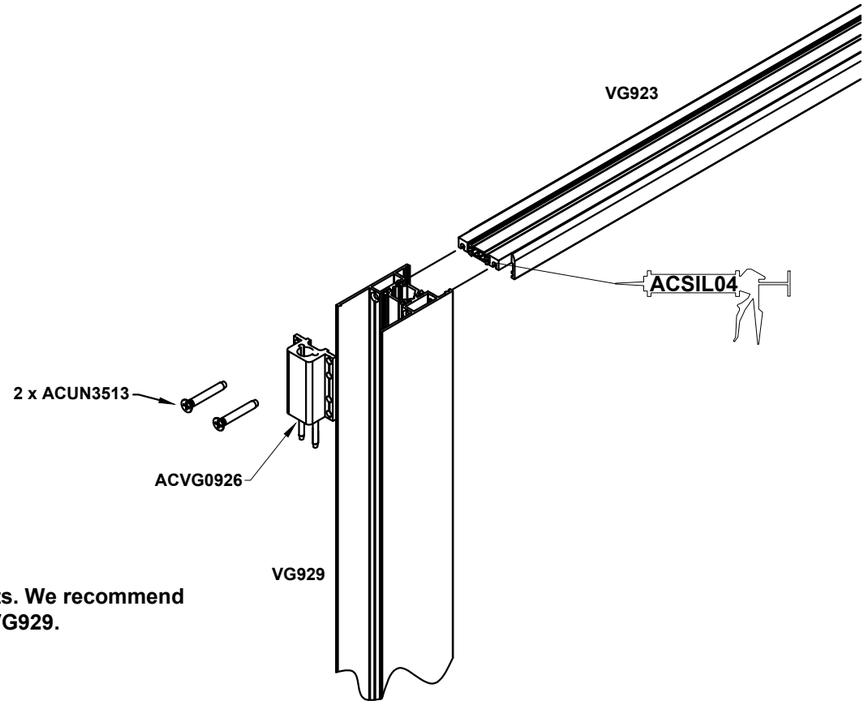

Important Fabrication Note:
ACVG0926 are required to secure the BT Lock shootbolts. We recommend assembling the sash with the BT Lock already fitted to VG929.
See BT Lock installation page for additional details.

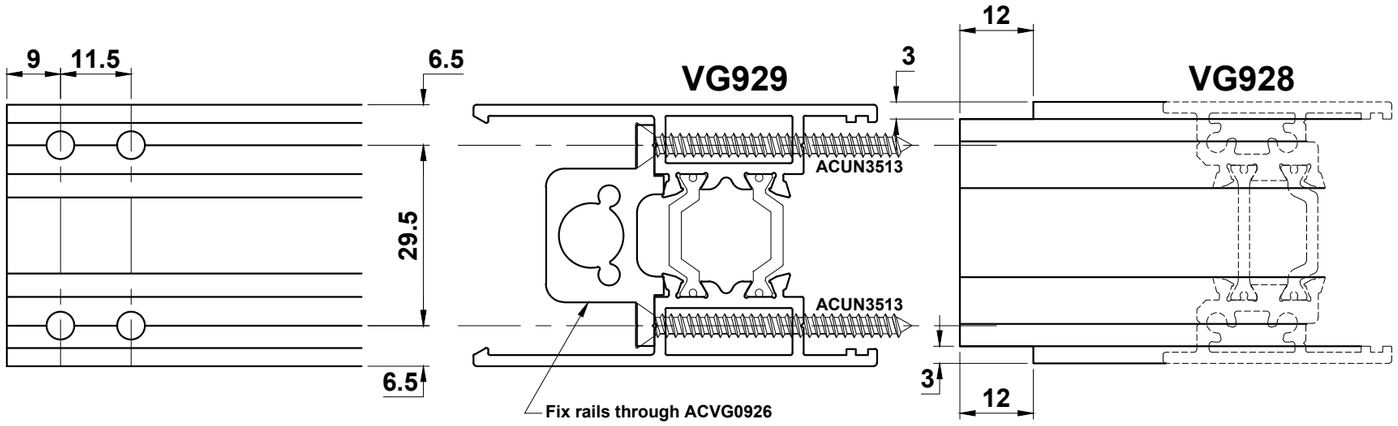

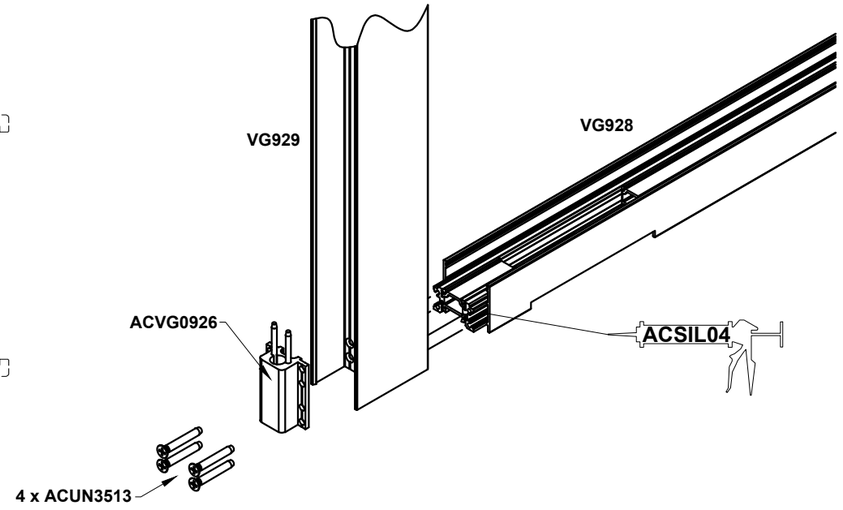

Do Not Scale From This Drawing

VG932 Interlock Machining

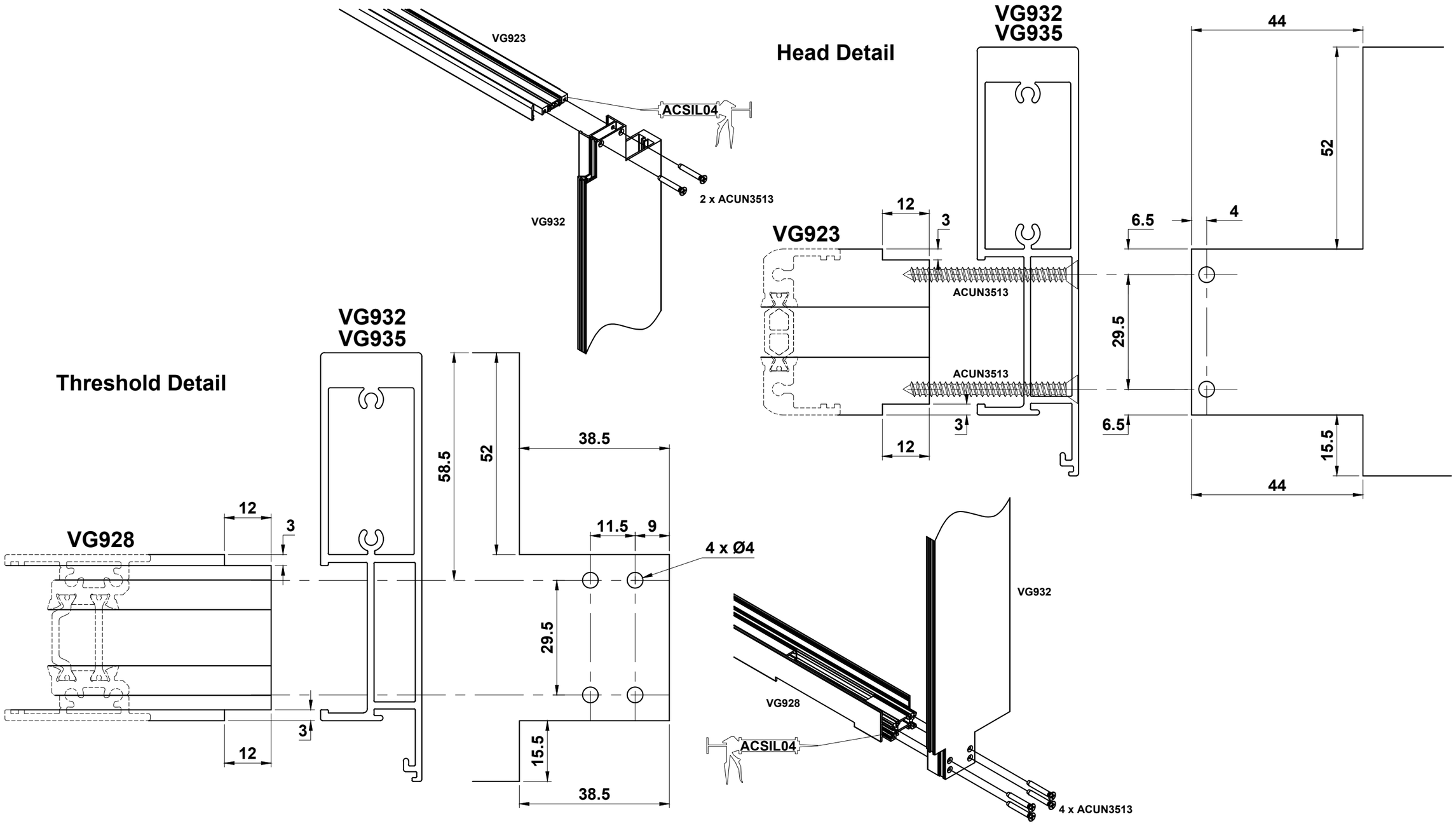

Do Not Scale From This Drawing

VG932 Interlock Assembly

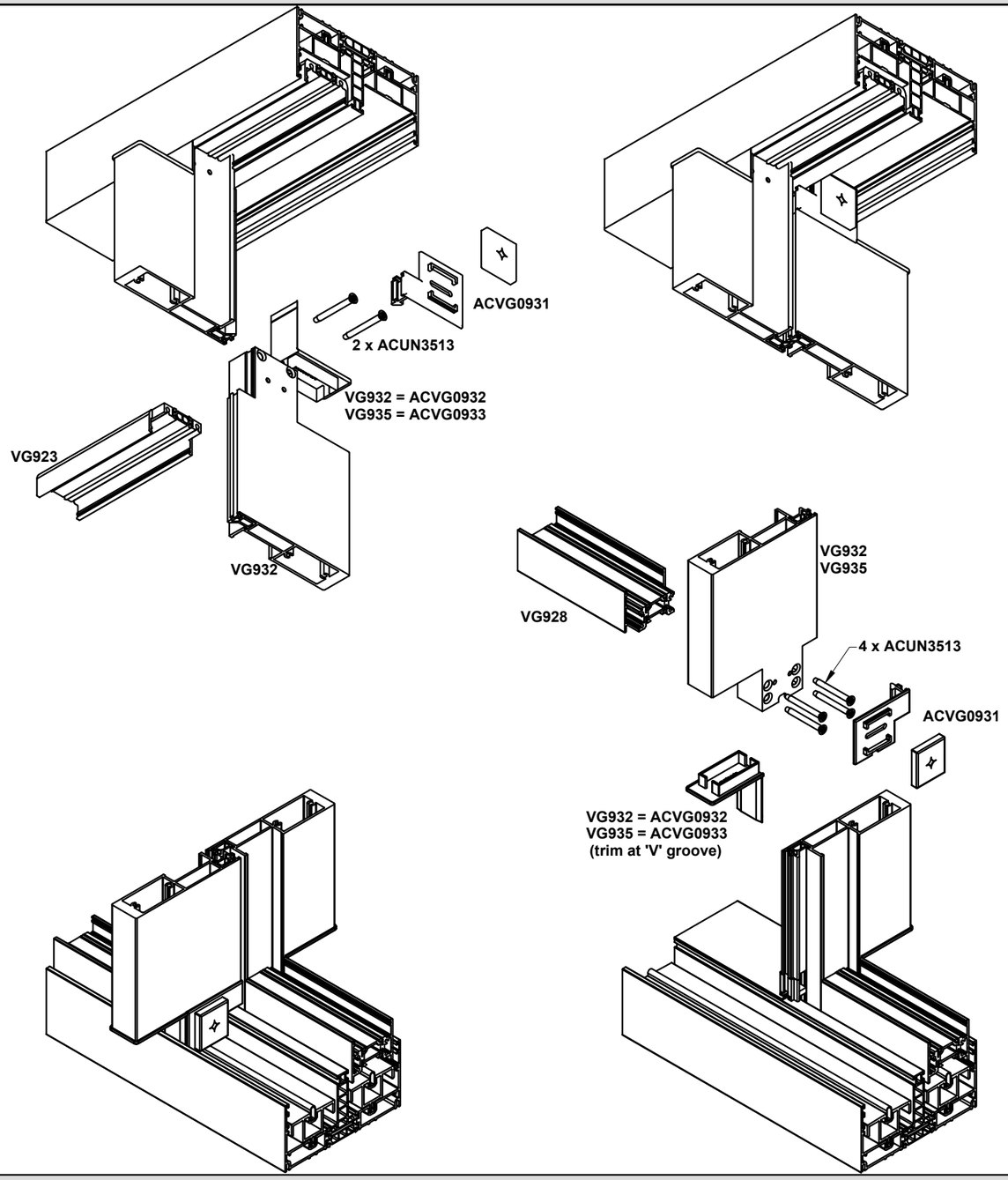

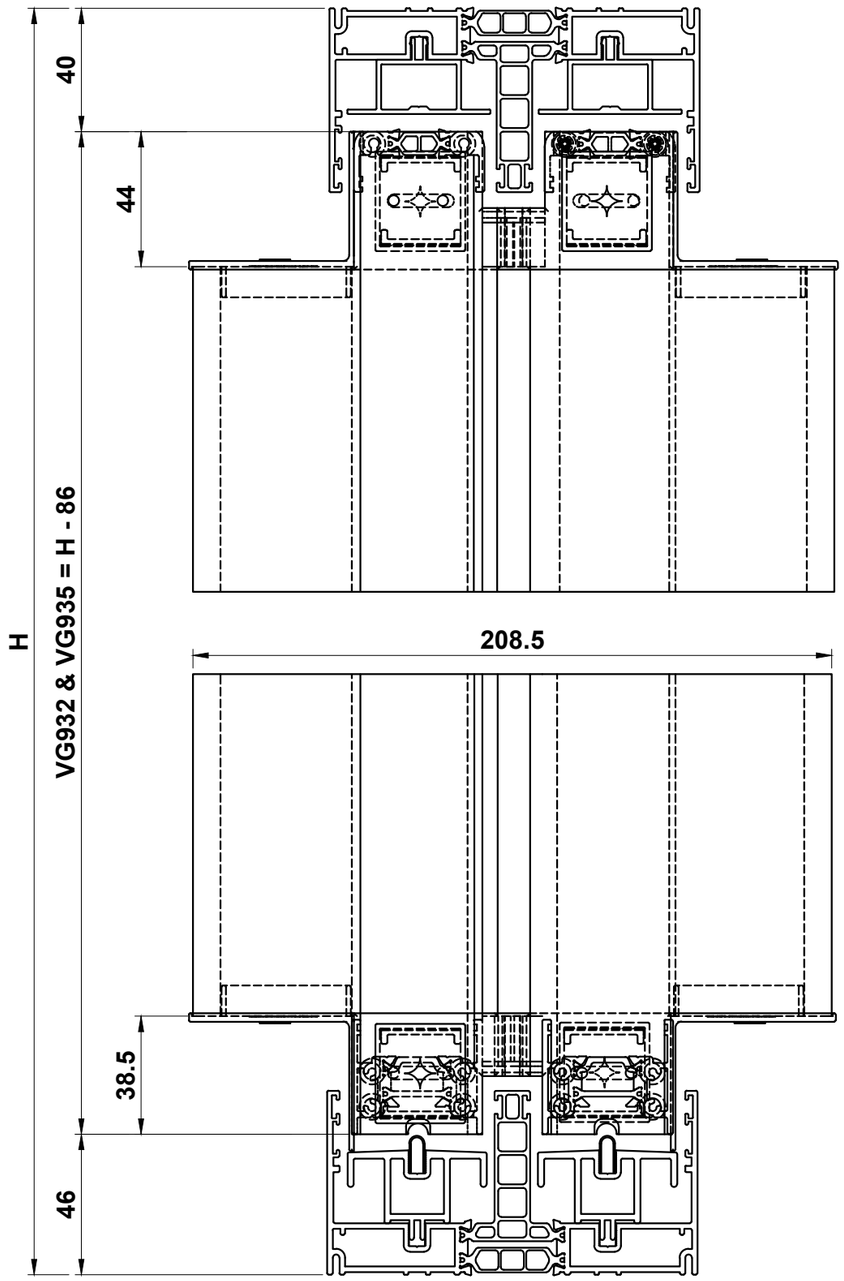

Sash Bonding

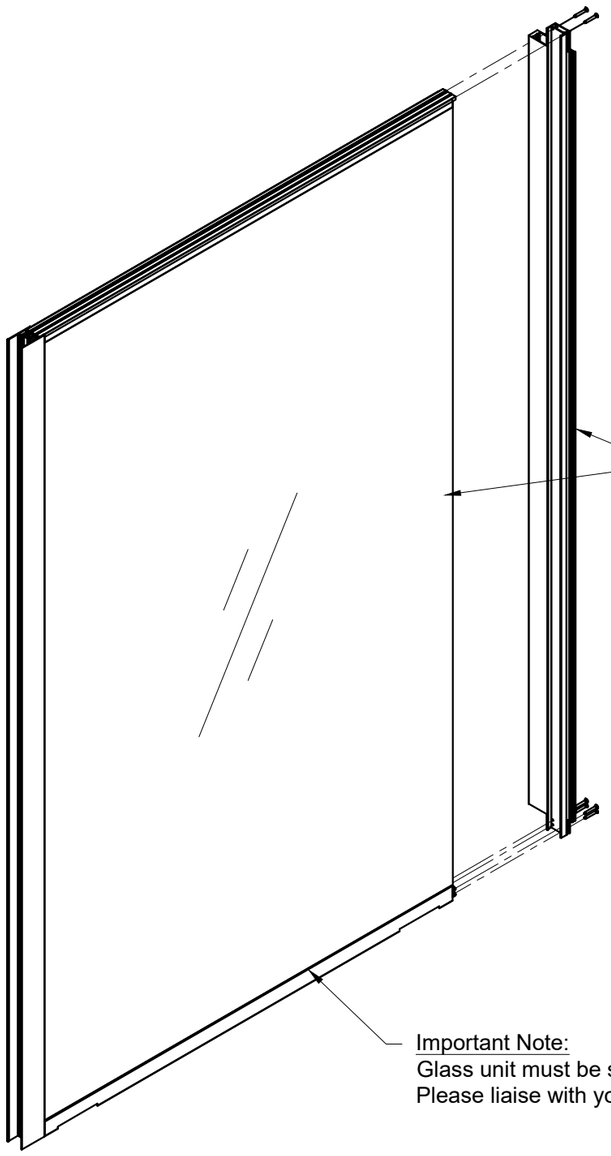

ACUN3610 is a high quality single component adhesive that provides a strong bond between the Butyl sealed unit and frame.

We recommend glazing the sash in the workshop at least a day before installation so it can be allowed to set.

However fixed panes should be glazed on site to allow for fitting.

Preparation:

Assemble frame.

Ensure area of bonding is clean, dry and free from any dust or surface contamination.

Apply a small coating of ACUN3612 surface activator to the interlock glazing channel and the bond area of the glass only. Allow to dry, leaving a slight residue.
Take care not to apply ACUN3612 to any visible surfaces.

Important Note:
Glass unit must be sealed with Butyl & without tape.
Please liaise with your glass supplier regarding the application.

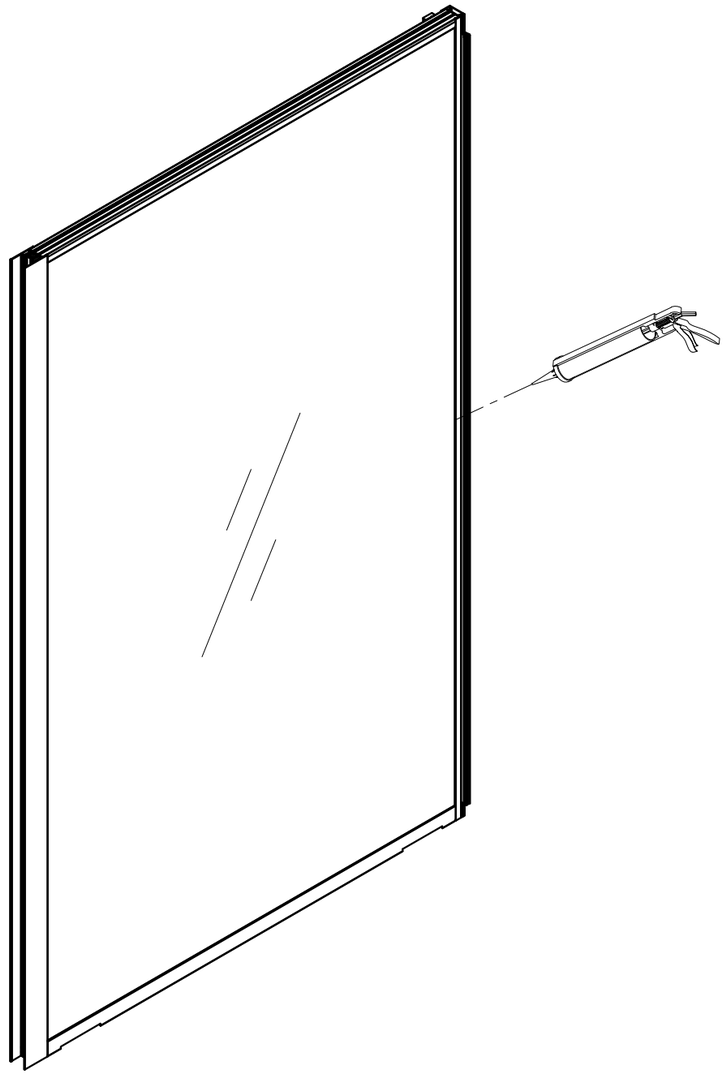

Do Not Scale From This Drawing

BT Lock Assembly

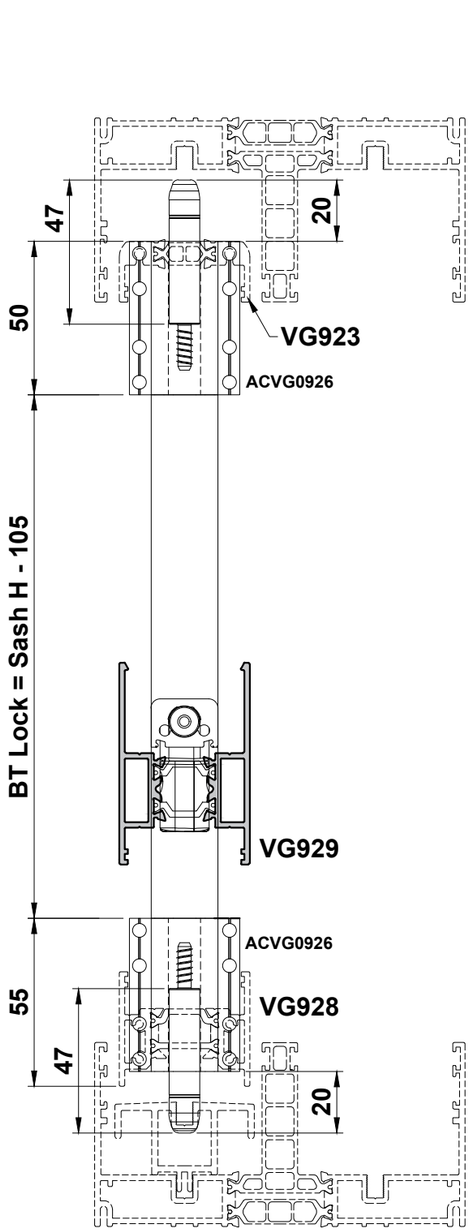

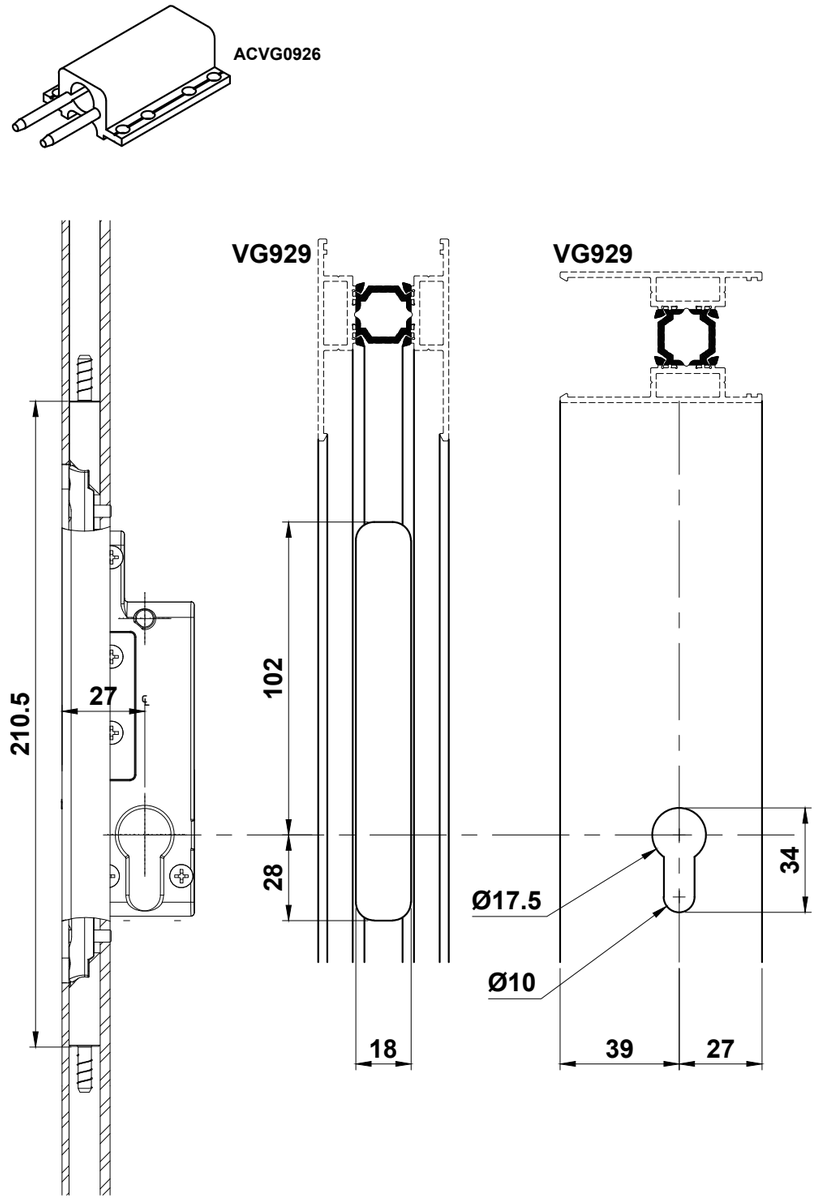

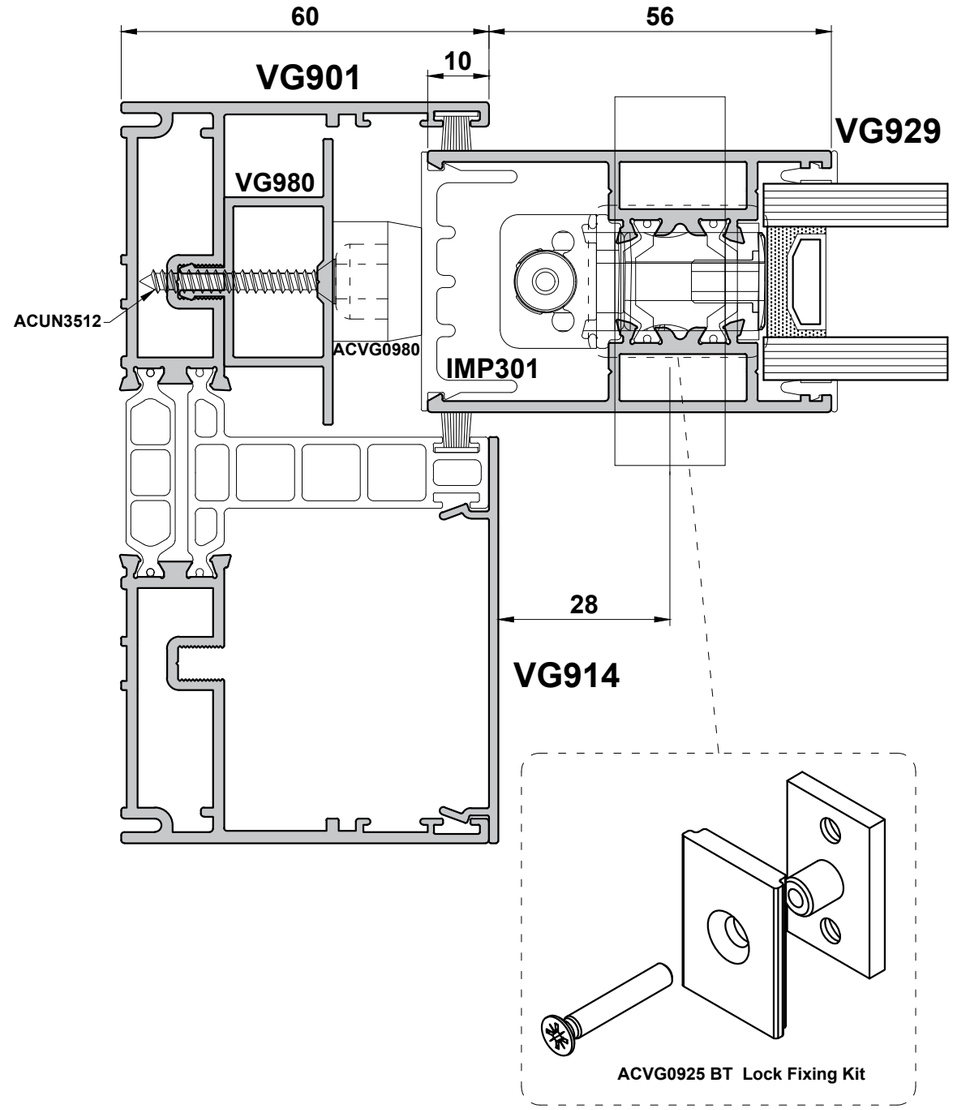

Do Not Scale From This Drawing

BT Lock Installation

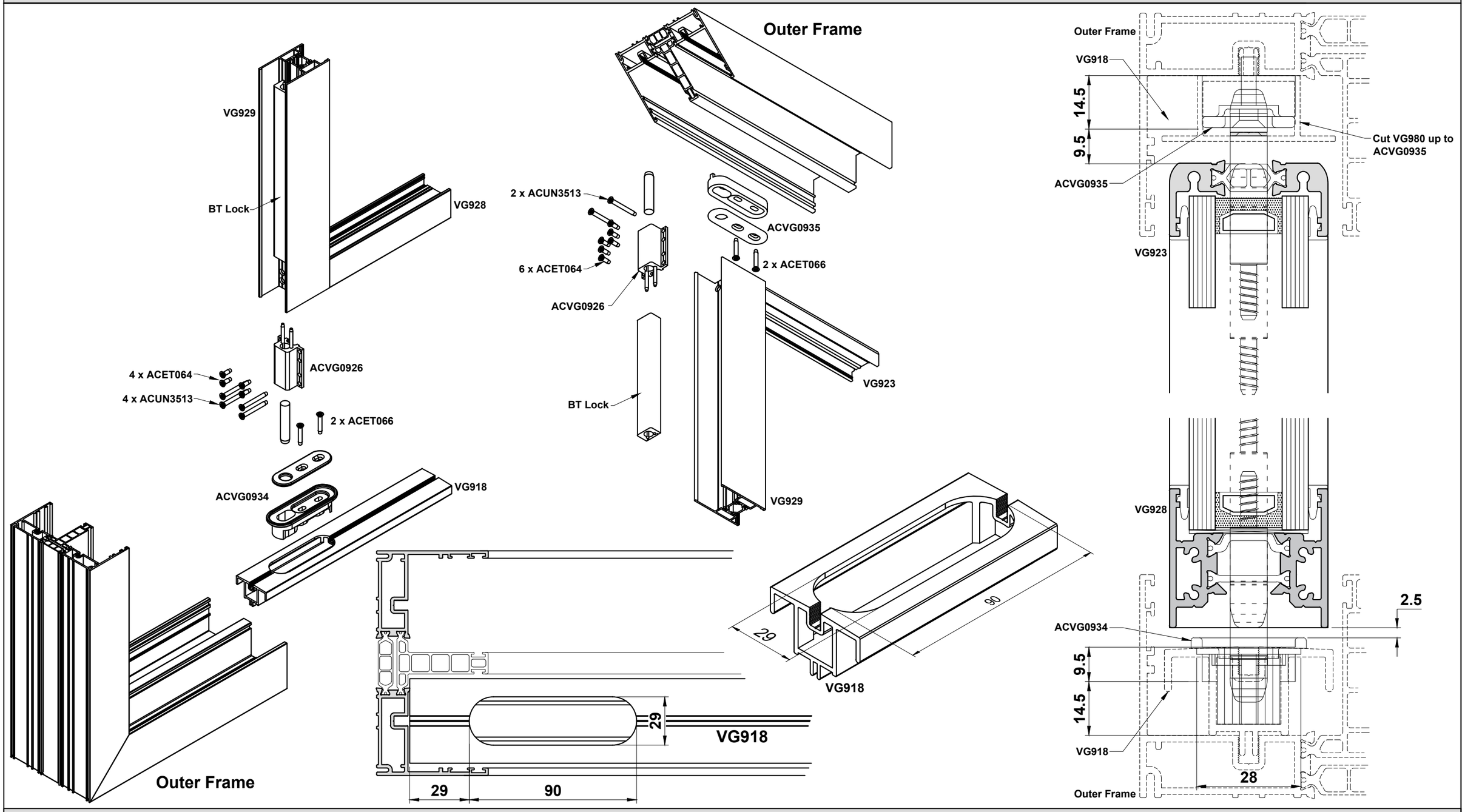

Do Not Scale From This Drawing

Meeting Stile Details

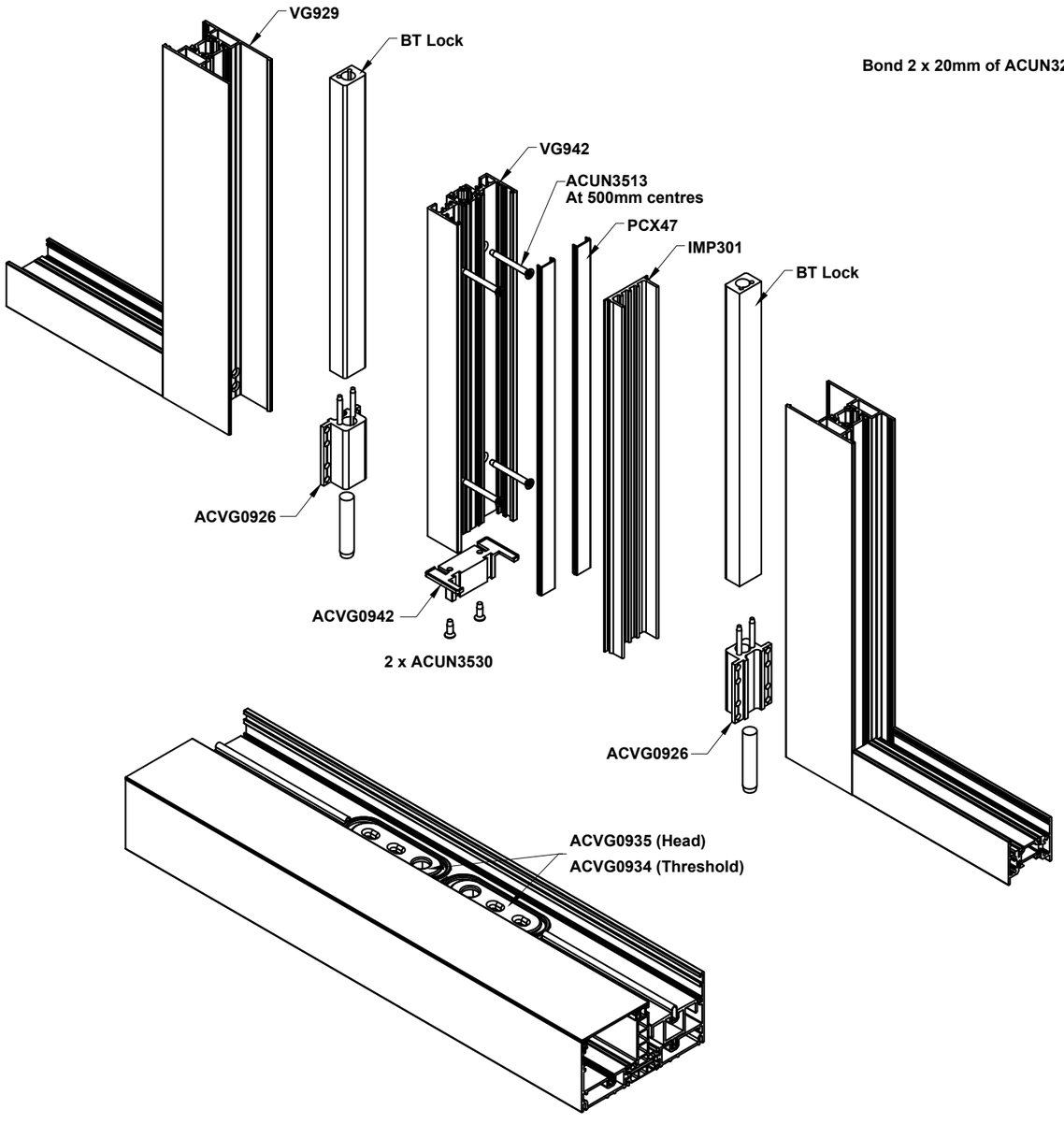

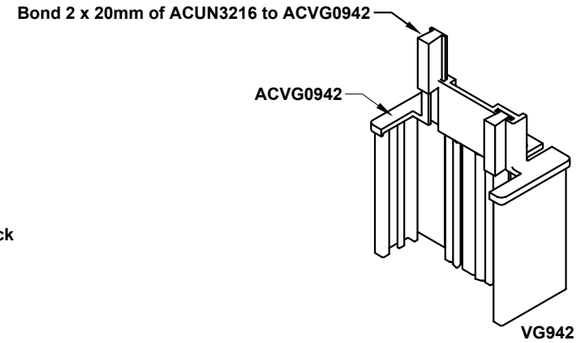

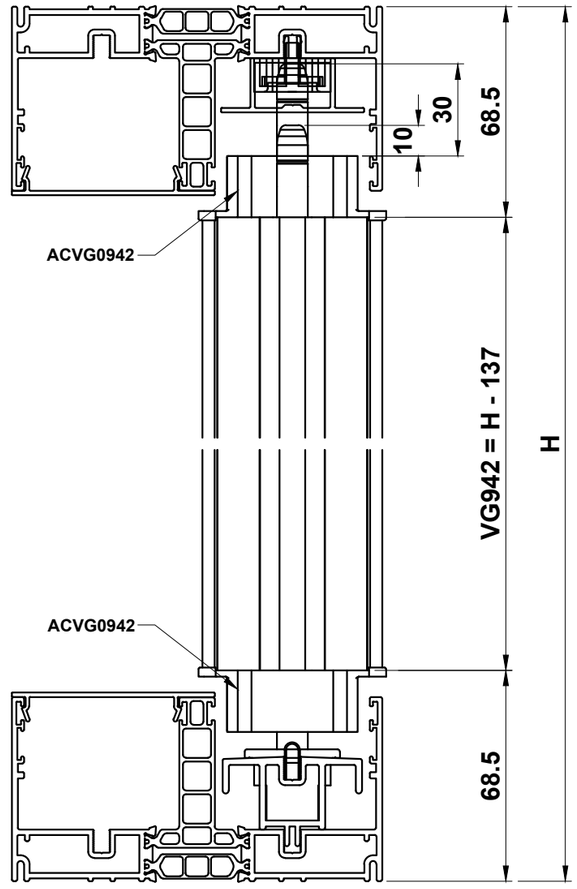

Keep Positions

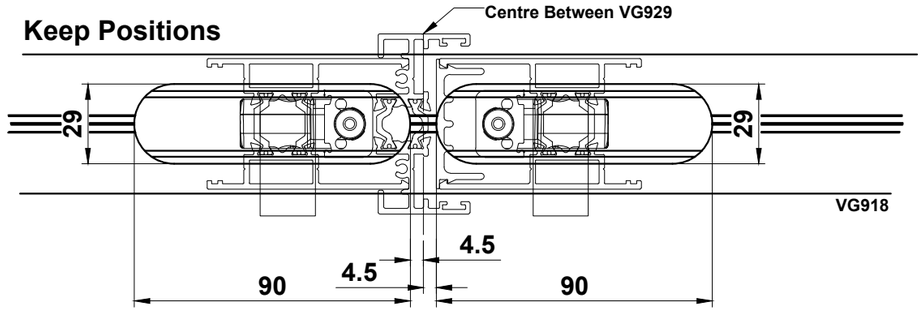

Do Not Scale From This Drawing

ACVG0980 Location

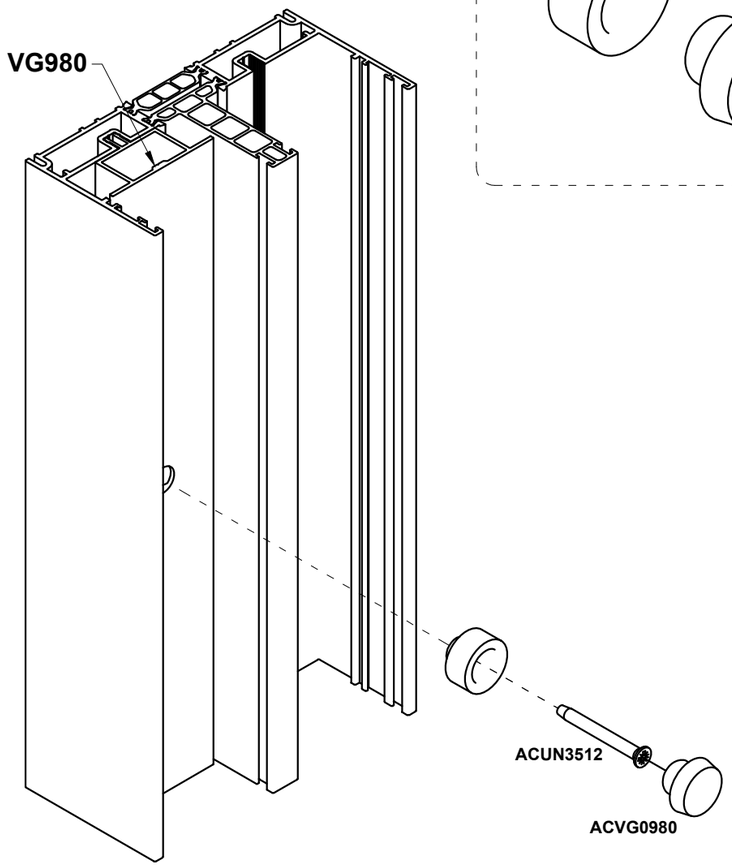

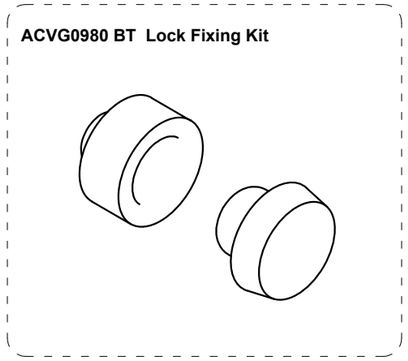

ACVG0980 Location

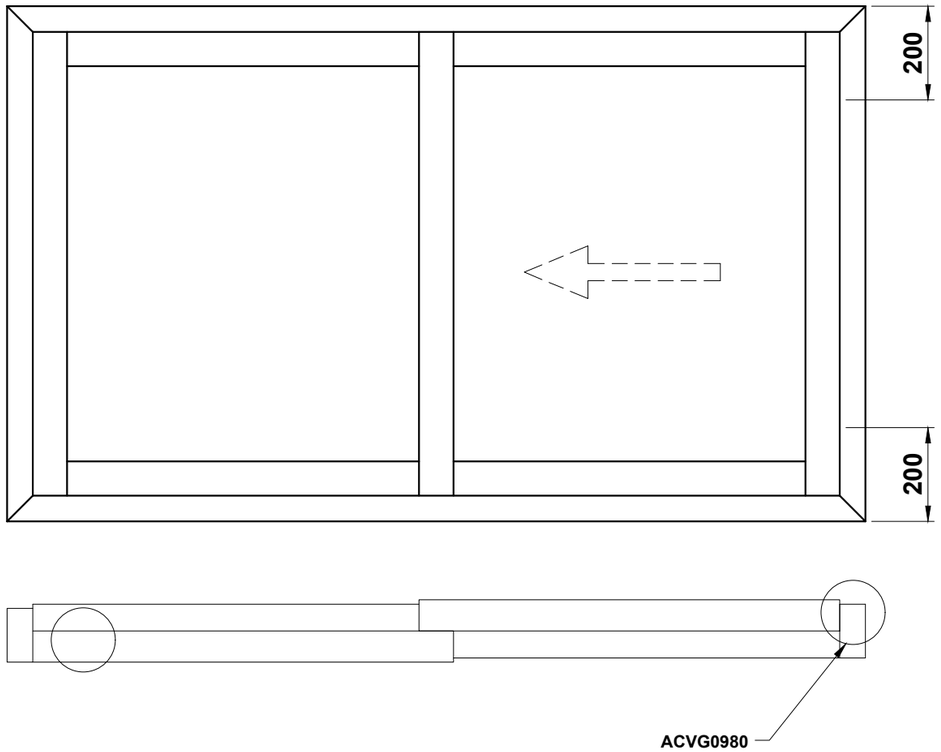

Do Not Scale From This Drawing

Section F

F VG

Sawing Tables

Two Pane, VG932 Interlock & BT Lock..... F03
Two Pane, VG935 Interlock & BT Lock..... F04
Three Pane, VG932 Interlock & BT Lock..... F05
Three Pane, VG935 Interlock & BT Lock..... F06
Four Pane, VG932 Interlock & BT Lock..... F07
Four Pane, VG935 Interlock & BT Lock..... F08

Section F

Cutting Information - 2 Pane Sliding door with VG932 Interlock & BT Lock

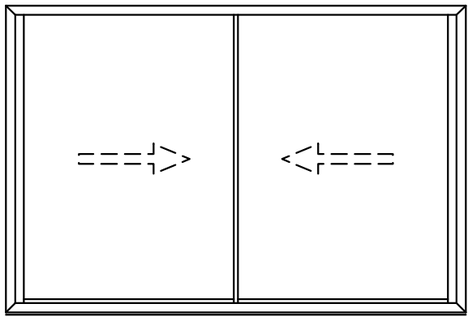

PROFILES

VG901		2		W
VG956		1		W
VG918		2		W - 35
VG53		2		W - 52
VG980		2		(W/2) - 140
VG980		2		(W/2) - 19
VG901		2		H
VG980		2		H - 75
VG914		2		H - 120
VG923		2		(W/2) - 105
VG928		2		(W/2) - 105
VG929		2		H - 89
IMP301		2		H - 89
VG932		2		H - 89
VG06		2		H - 89

GLASS SIZE	
2x	(W / 2) - 109
	H - 126.5

ACCESSORIES

ACGSL045	MAX 800 mm	Drainage Cap
ACET057	8	Outer Frame Cleat
WCA106	8	Outer Frame Chevron
ACUN3216	(8 X W) + (6 X H)	Woolpile
ACVG0934	2	Threshold BT Lock Keep
ACVG0935	2	Head BT Lock Keep
ACVG0980	4	Rubber Buffer
ACVG565	4	Fixed Roller
ACVG0925	12	BT Lock Fixing
ACVG0926	4	BT Lock Guide
ACVG0932	4	VG932 End Cap
ACVG0904	(4 X W) + (8 X H)	Gasket
ACSZ040/41/42	2	BT Lock

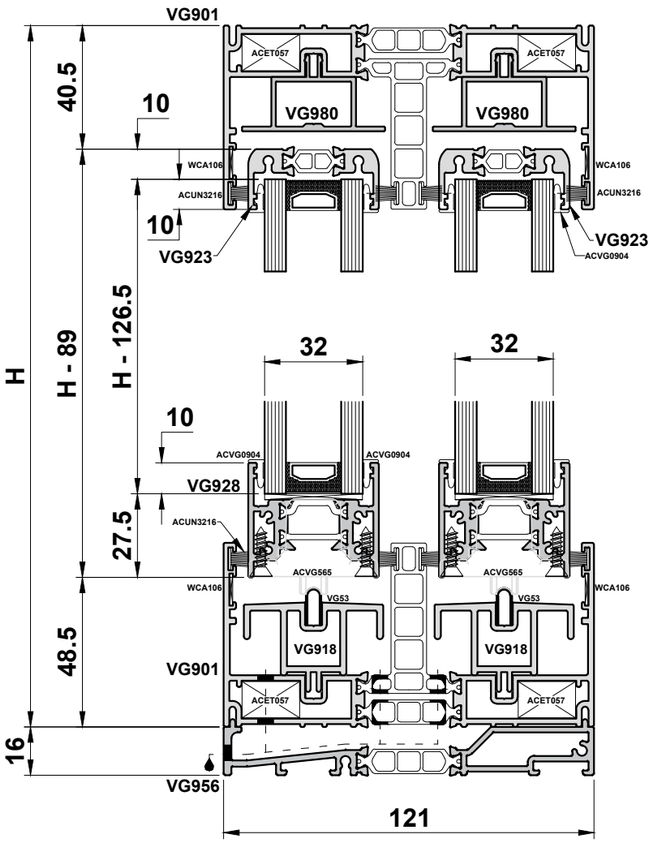

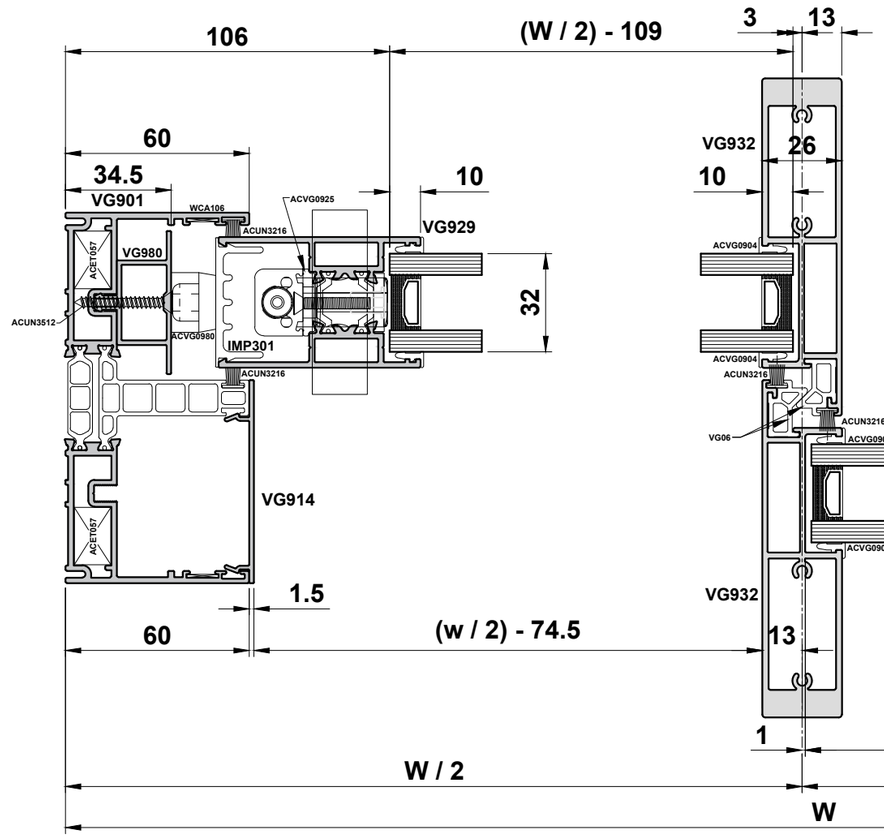

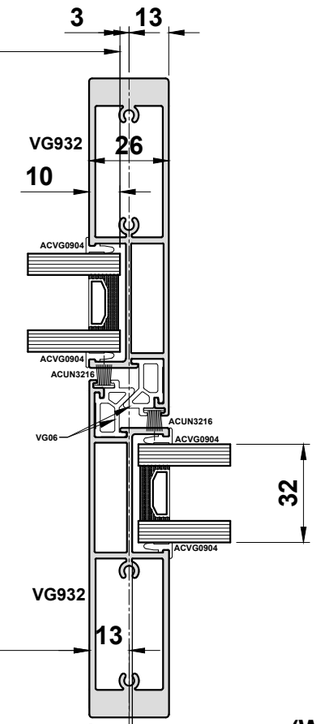

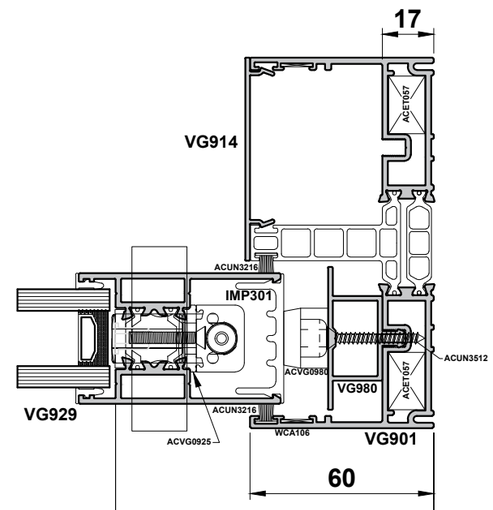

Cutting Information - 2 Pane sliding Door With VG935 Interlock & BT Lock

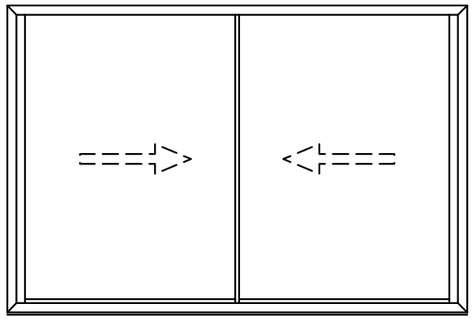

PROFILES

VG901		2		W
VG956		1		W
VG918		2		W - 35
VG53		2		W - 52
VG980		2		(W/2) - 140
VG980		2		(W/2) - 19
VG901		2		H
VG980		2		H - 75
VG914		2		H - 120
VG923		2		(W/2) - 102
VG928		2		(W/2) - 102
VG929		2		H - 89
IMP301		2		H - 89
VG935		2		H - 89
VG07		2		H - 89

GLASS SIZE	
2x	(W / 2) - 106
	H - 126.5

ACCESSORIES

ACGSL045	MAX 800 mm	Drainage Cap
ACET057	8	Outer Frame Cleat
WCA106	8	Outer Frame Chevron
ACUN3216	(8 X W) + (6 X H)	Woolpile
ACVG0934	2	Threshold BT Lock Keep
ACVG0935	2	Head BT Lock Keep
ACVG0980	4	Rubber Buffer
ACVG565	4	Fixed Roller
ACVG0925	12	BT Lock Fixing
ACVG0926	4	BT Lock Guide
ACVG0933	4	VG935 End Cap
ACVG0904	(4 X W) + (8 X H)	Gasket
ACSZ040/41/42	2	BT Lock

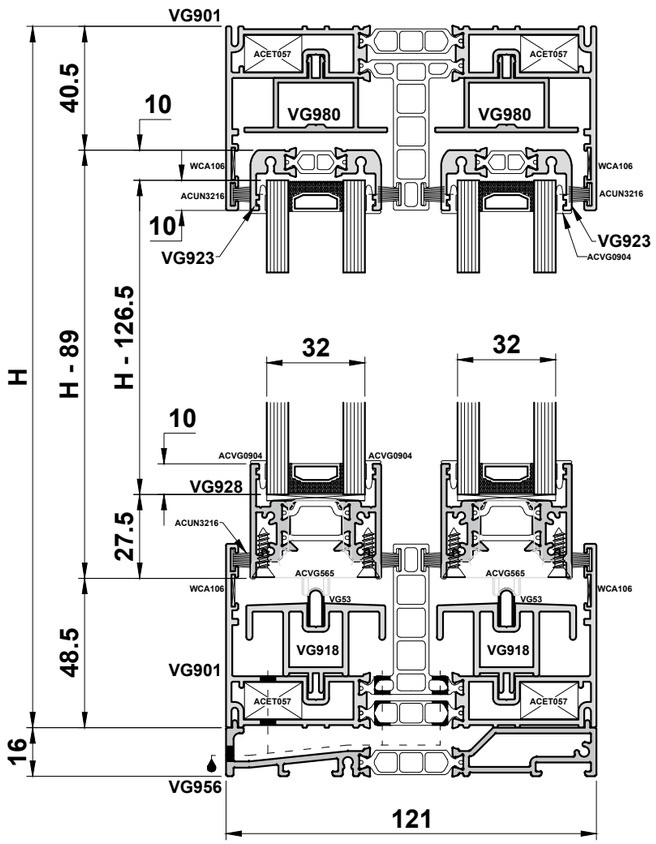

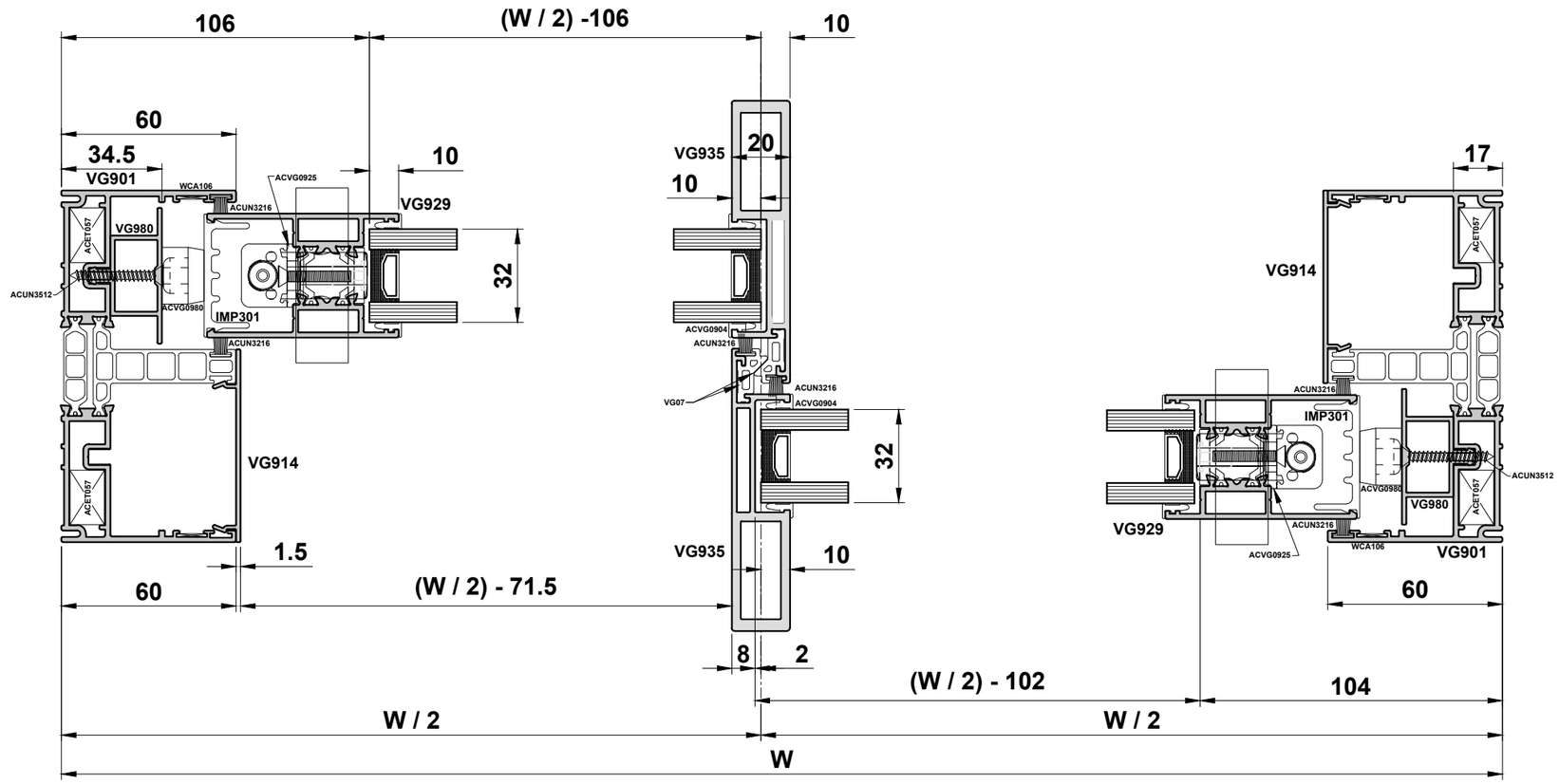

Cutting Information - 3 Pane Sliding door with VG932 Interlock & BT Lock

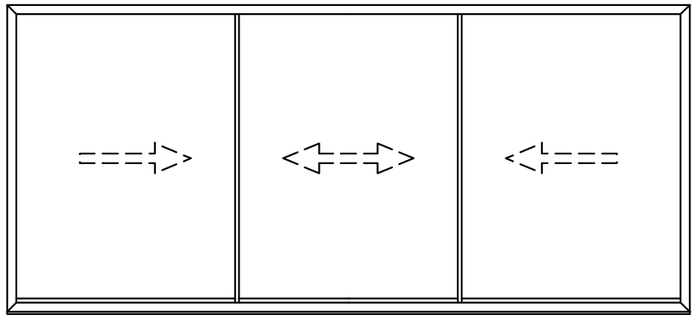

PROFILES

VG902	2		W
VG959	1		W
VG918	3		W - 35
VG53	3		W - 52
VG980	2		(W/3) - 108
VG980	2		(W/3 x 2) - 49
VG980	2		(W/3) + 15
VG980	1		(W/3) - 65
VG902	2		H
VG980	2		H - 75
VG914	2		H - 120
VG915	2		H - 120
VG923	3		(W/3) - 72
VG928	3		(W/3) - 72
VG932	4		H - 89
VG06	4		H - 89
VG929	2		H - 89
IMP301	2		H - 89

GLASS SIZE	
3x	(W / 3) - 74
	H - 126.5

ACCESSORIES

ACGSL045	MAX 800 mm	Drainage Cap
ACET057	8	Outer Frame Cleat
WCA106	8	Outer Frame Chevron
ACUN3216	(12 X W) + (8 X H)	Woolpile
ACVG0932	6	VG932 End Cap
ACVG0904	(6 X W) + (12 X H)	Gasket
ACVG0925	12	BT Lock Fixing
ACVG0926	4	BT Lock Guide
ACVG0934	2	Threshold BT Lock Keep
ACVG0935	2	Head BT Lock Keep
ACVG0980	4	Rubber Buffer
ACVG565	6	Fixed Roller

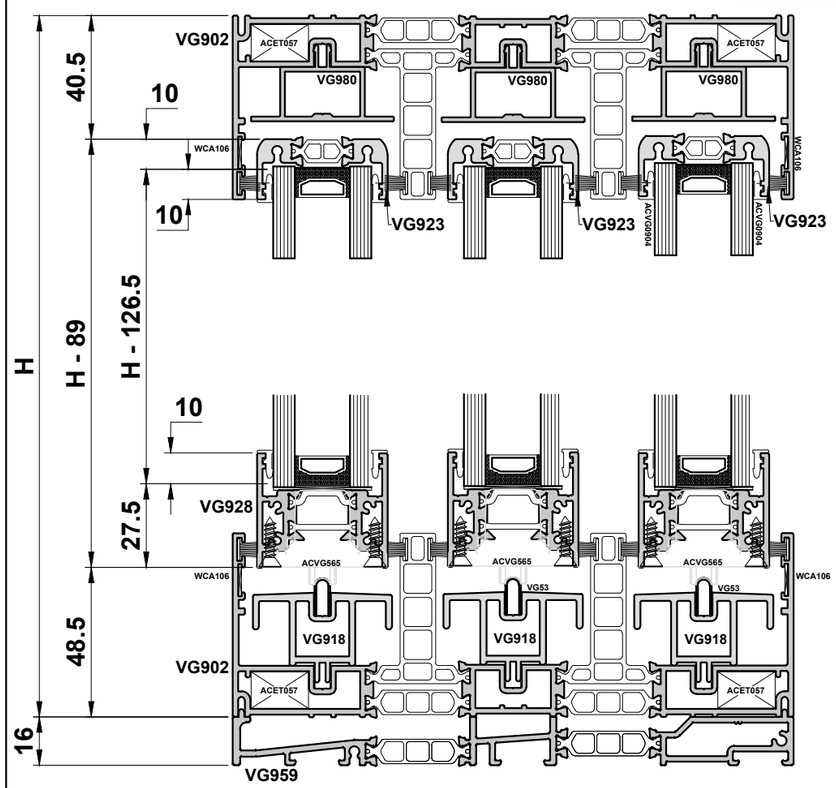

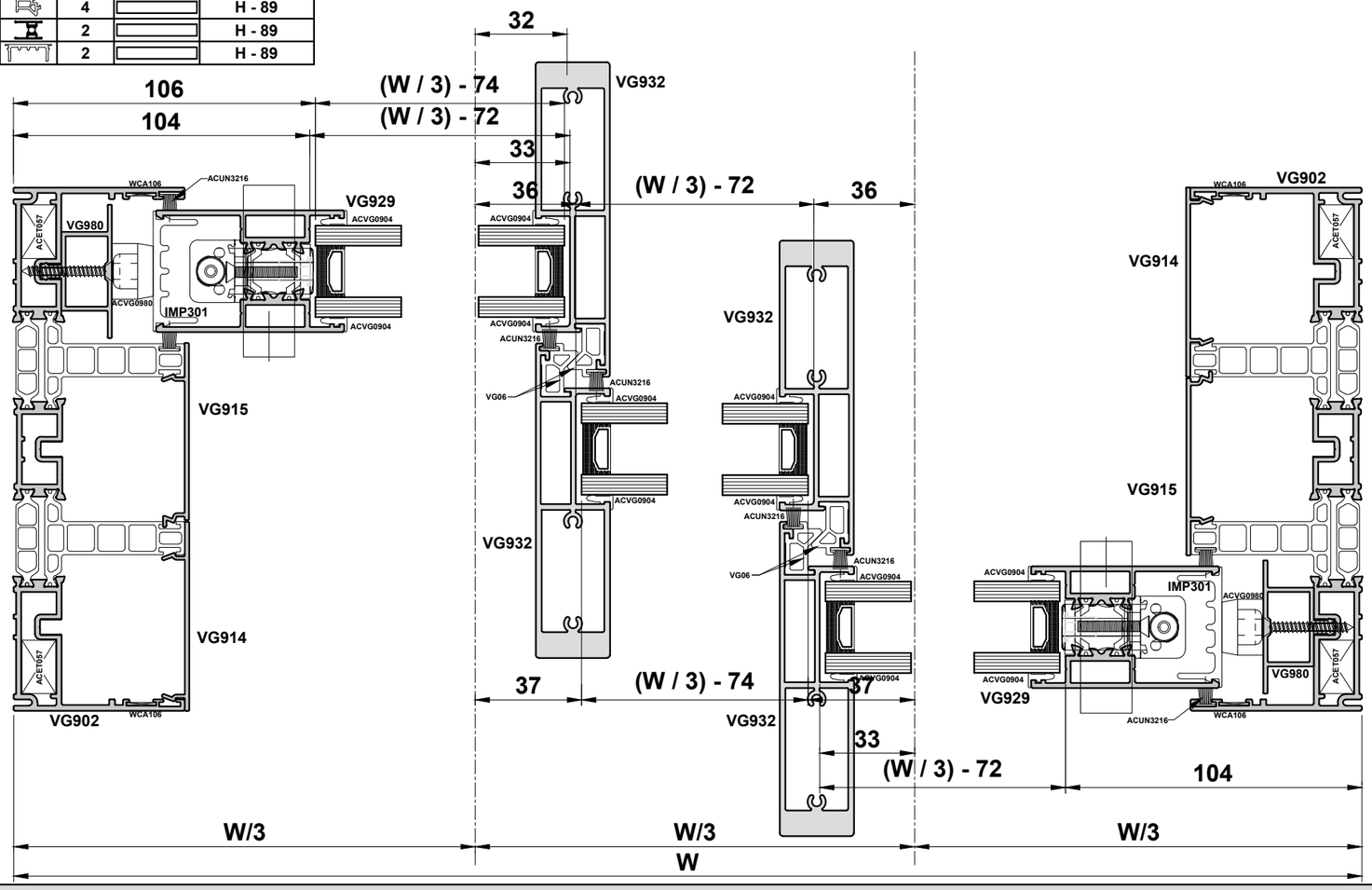

Cutting Information - 3 Pane sliding Door With VG935 Interlock & BT Lock

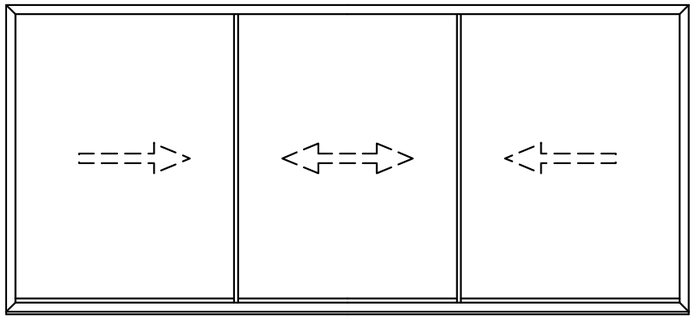

PROFILES

VG902	2		W
VG959	1		W
VG918	3		W - 35
VG53	3		W - 52
VG980	2		(W/3) - 108
VG980	2		(W/3 x 2) - 49
VG980	2		(W/3) + 15
VG980	1		(W/3) - 65
VG902	2		H
VG980	2		H - 75
VG914	2		H - 120
VG915	2		H - 120
VG923	3		(W/3) - 67
VG928	3		(W/3) - 67
VG935	4		H - 89
VG07	4		H - 89
VG929	2		H - 89
IMP301	2		H - 89

GLASS SIZE	
3x	(W / 3) - 74
	H - 126.5

ACCESSORIES

ACGSL045	MAX 800 mm	Drainage Cap
ACET057	8	Outer Frame Cleat
WCA106	8	Outer Frame Chevron
ACUN3216	(12 X W) + (8 X H)	Woolpile
ACVG0933	6	VG935 End Cap
ACVG0904	(6 X W) + (12 X H)	Gasket
ACVG0925	12	BT Lock Fixing
ACVG0926	4	BT Lock Guide
ACVG0934	2	Threshold BT Lock Keep
ACVG0935	2	Head BT Lock Keep
ACVG0980	4	Rubber Buffer
ACVG565	6	Fixed Roller

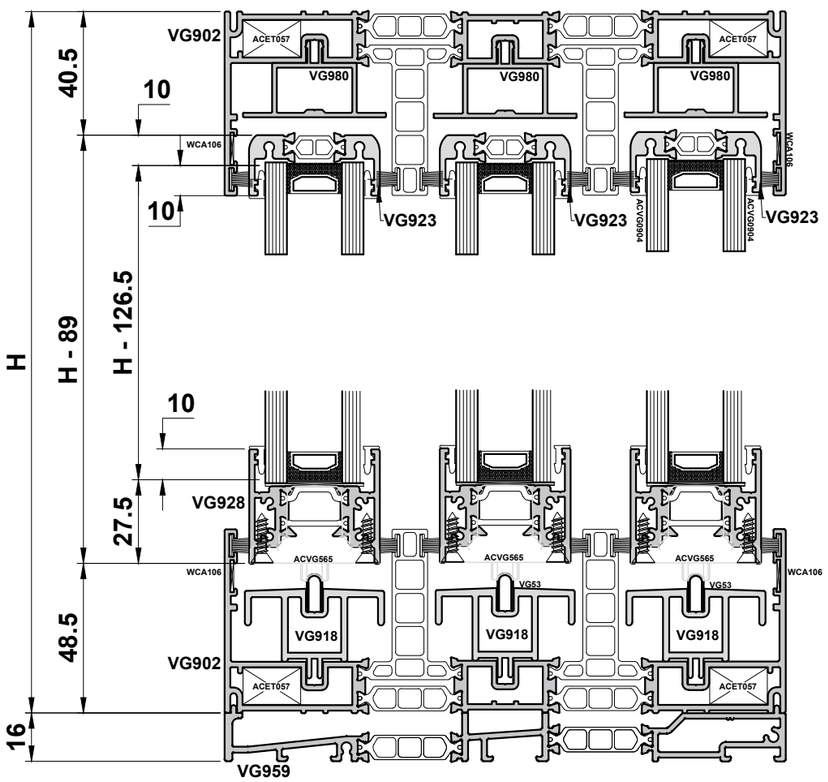

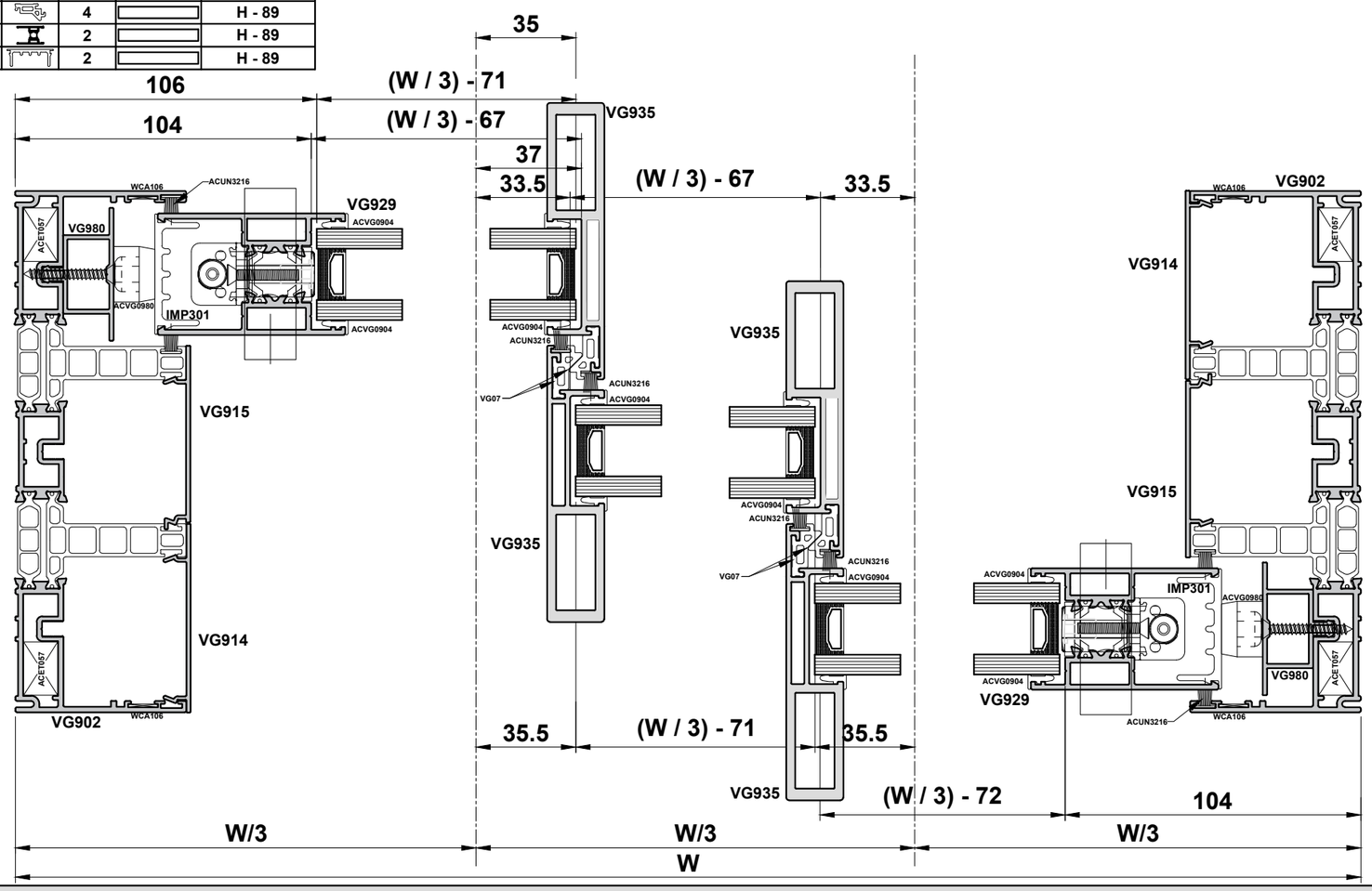

Do Not Scale From This Drawing

Cutting Information - 4 Pane Sliding door with VG932 Interlock & BT Lock

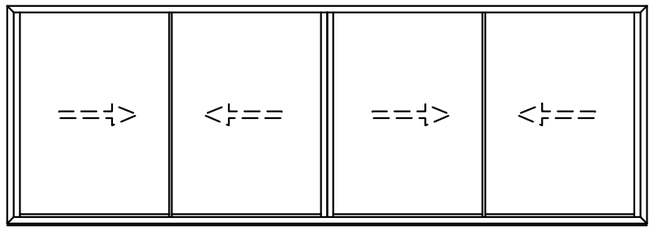

PROFILES

VG901		2		W
VG956		1		W
VG918		2		W - 35
VG53		2		W - 52
VG980		4		(W/4) - 119
VG980		1		(W/4 x2) - 43
VG980		2		(W/4) + 4
VG901		2		H
VG980		2		H - 75
VG914		2		H - 120
VG923		4		(W/4) - 82.5
VG928		4		(W/4) - 82.5
VG929		4		H - 89
IMP301		3		H - 89
VG942		1		H - 137
VG932		4		H - 89
VG06		4		H - 89

GLASS SIZE	
4x	(W / 4) - 86.5
	H - 126.5

ACCESSORIES

ACGSL045	MAX 800 mm	Drainage Cap
ACET057	8	Outer Frame Cleat
WCA106	8	Outer Frame Chevron
ACUN3216	(8 X W) + (10 X H)	Woolpile
ACVG0934	4	Threshold BT Lock Keep
ACVG0935	4	Head BT Lock Keep
ACVG0980	4	Rubber Buffer
ACVG565	8	Fixed Roller
ACVG0925	24	BT Lock Fixing
ACVG0926	8	BT Lock Guide
ACVG0932	8	VG932 End Cap
ACVG0942	2	VG942 End Cap
ACVG0904	(4 X W) + (16 X H)	Gasket
ACSZ040/41/42	4	BT Lock

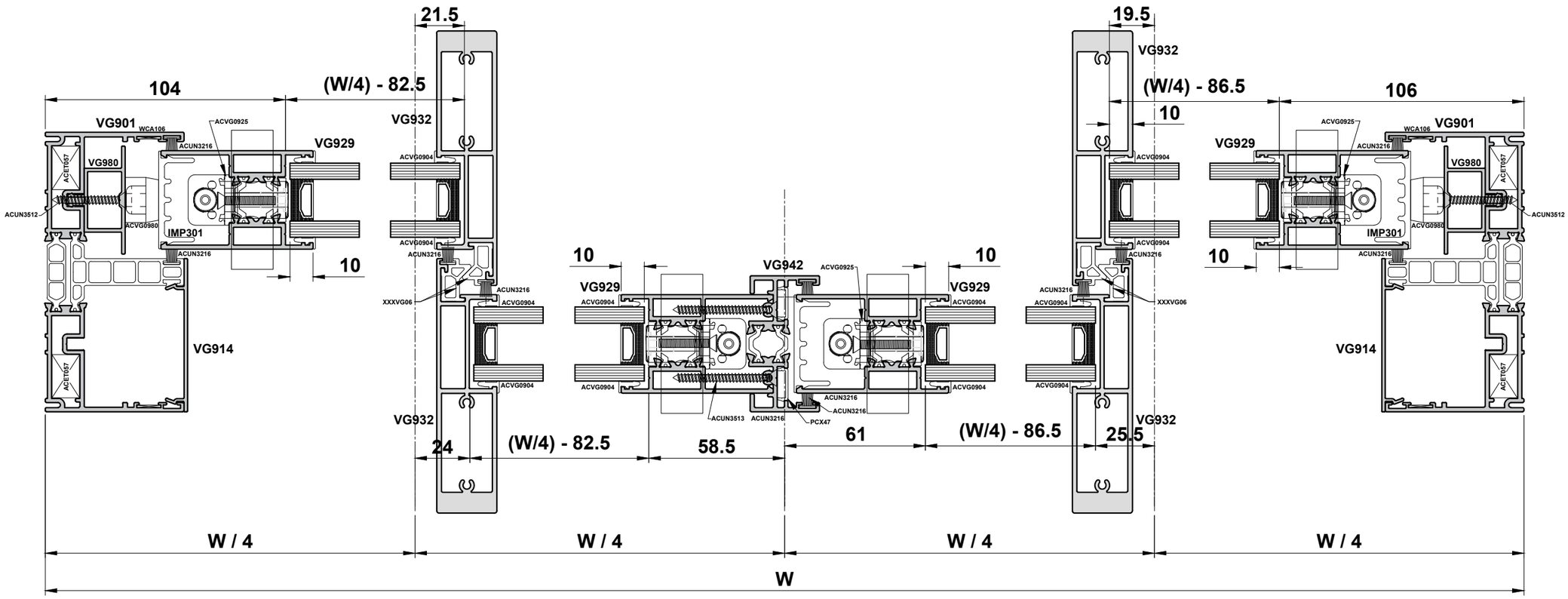

Do Not Scale From This Drawing

Cutting Information - 4 Pane sliding Door With VG935 Interlock & BT Lock

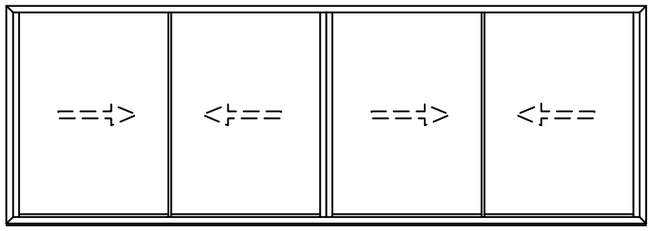

PROFILES

VG901		2		W
VG956		1		W
VG918		2		W - 35
VG53		2		W - 52
VG980		4		(W/4) - 119
VG980		1		(W/4 x2) - 43
VG980		2		(W/4) + 4
VG901		2		H
VG980		2		H - 75
VG914		2		H - 120
VG923		4		(W/4) - 79.5
VG928		4		(W/4) - 79.5
VG929		4		H - 89
IMP301		3		H - 89
VG942		1		H - 137
VG935		4		H - 89
VG07		4		H - 89

GLASS SIZE	
4x	(W / 4) - 83.5
	H - 126.5

ACCESSORIES

ACGSL045	MAX 800 mm	Drainage Cap
ACET057	8	Outer Frame Cleat
WCA106	8	Outer Frame Chevron
ACUN3216	(8 X W) + (10 X H)	Woolpile
ACVG0934	4	Threshold BT Lock Keep
ACVG0935	4	Head BT Lock Keep
ACVG0980	4	Rubber Buffer
ACVG565	8	Fixed Roller
ACVG0925	24	BT Lock Fixing
ACVG0926	8	BT Lock Guide
ACVG0933	8	VG935 End Cap
ACVG0942	2	VG942 End Cap
ACVG0904	(4 X W) + (16 X H)	Gasket
ACSZ040/41/42	4	BT Lock

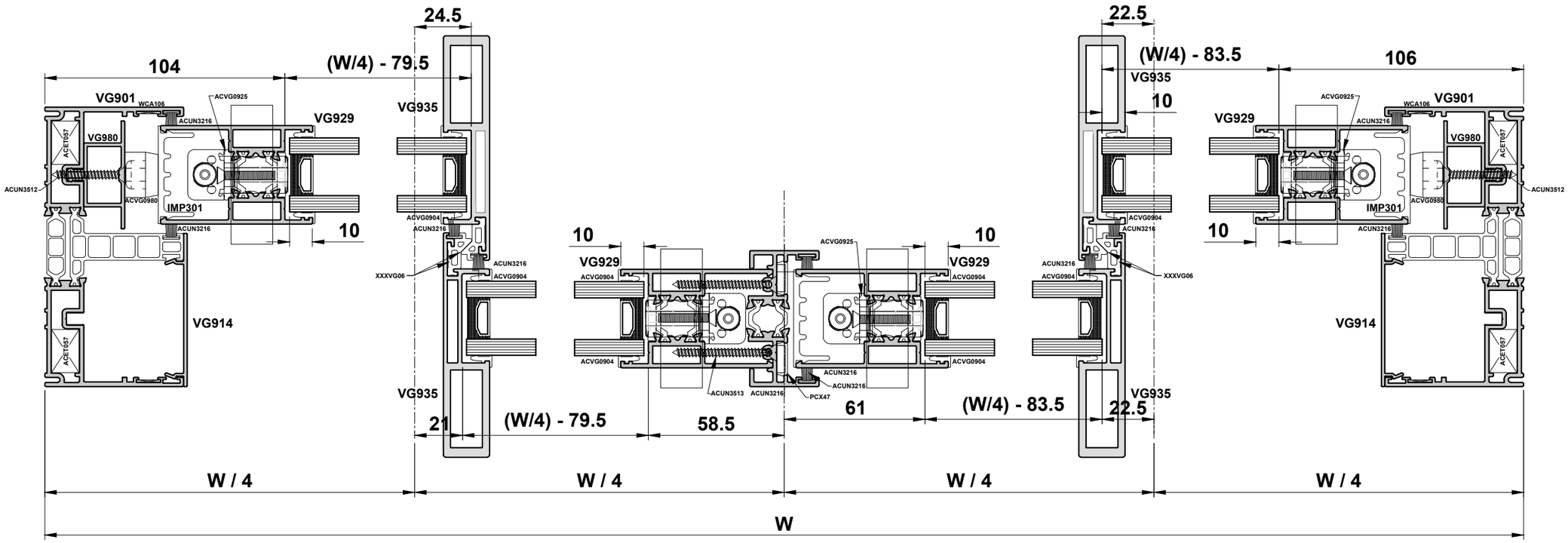

Do Not Scale From This Drawing