smart
architectural aluminium

visofold *2000*

SLIDE FOLDING DOORS

Smart Architectural Aluminium

Visofold **2000**

Technical Manual

August 2010

For further information visit **www.smartsystems.co.uk**

DV

Bulletin

New low threshold DV271 to be used as an alternative to DV171 on open out doors.

	Number	Perim. mm	Mec. mm	Ix(cm4) wx(cm3)	Iy(cm4) wy(cm3)	Length	Pack pr.	MF	SA	KL	HP	M
New	DV271	356	170	23.41 ----- 5.81	1.07 ----- 1.48	6.5	1		✓			

New
DV271
Open Out
Low Threshold

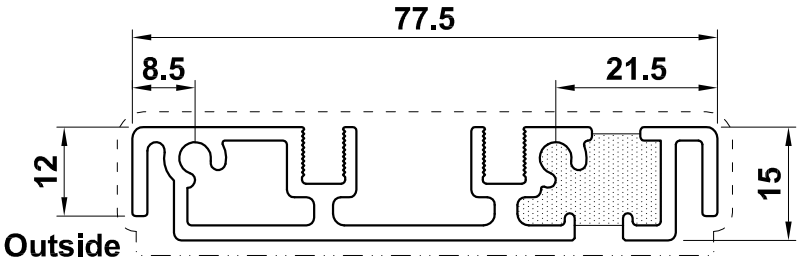

End Cap = ACDV171

Existing
DV171
Open In
Low Threshold

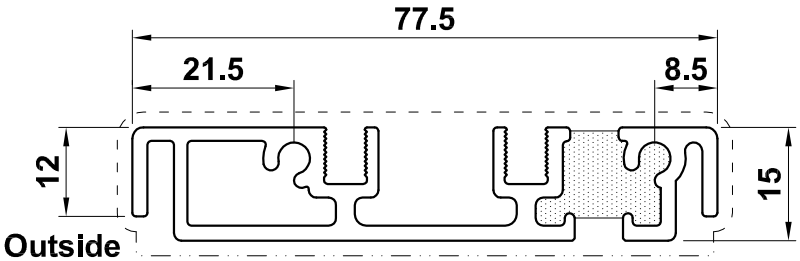

End Cap = ACDV171

Please Note: DV171 & DV271 are non-rebated. Please use rebated threshold where enhanced weather performance is required.

Bulletin

Due to a change in product from our supplier, the existing locks shown here are now handed.

Please specify the required handing when placing your order.

Part Code	Pack	Unit
ACDV715L/R Visofold Lock	1	set
ACVL415L/R Visoline Lock	1	set
ACVL642L/R Visoline Lock	1	set
ACVL707L/R Visoline Lock	1	set

OPEN IN

Viewed Externally

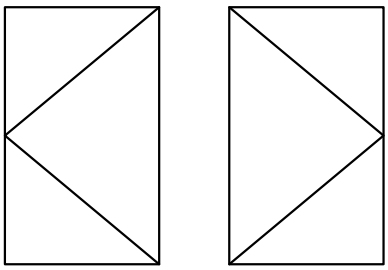

Inside

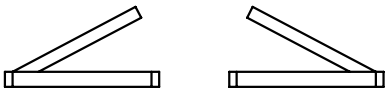

Right Hand Lock Set **Left Hand Lock Set**

Outside

OPEN OUT

Viewed Externally

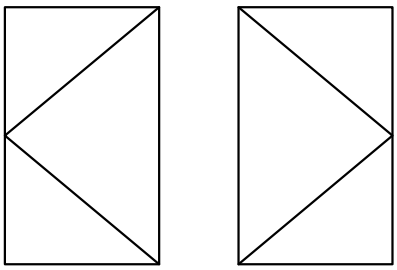

Inside

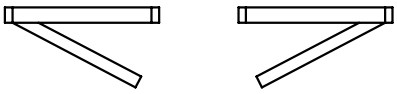

Left Hand Lock Set **Right Hand Lock Set**

Outside

Bulletin

DV14 has been modified to provide greater cover against the sash. The 'N' suffix has been removed to identify this amendment.
Cutting sizes are unaffected.

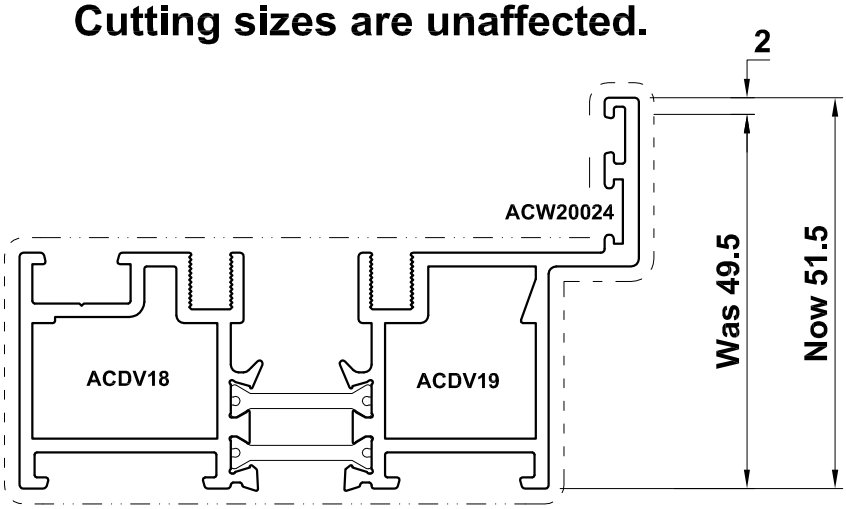

DV14

Now Available

	Image	Part Code	Pack	Unit
New	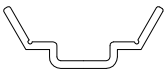	ACDV278 Optional DV14 Channel Infill Black Only	250	m

ACDV278

ACDV278 may be used at the head, cill & jambs as required.

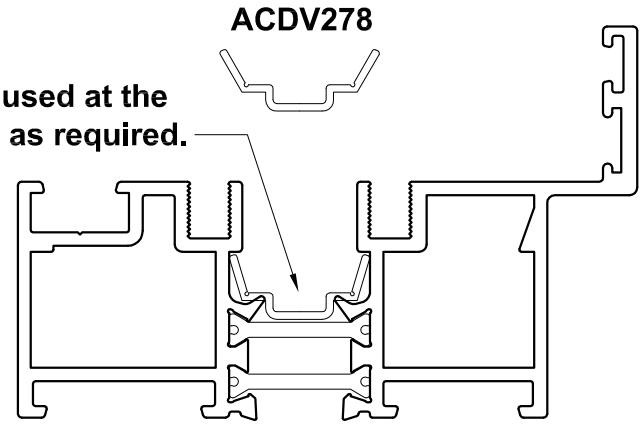

Bulletin

	Image	Part Code	Pack	Unit	Application
New		ACW20038 4-3mm Tear-away Low-line Wedge Gasket Black Only	200	m	Alitherm series, Evolution

ACW20038

New alternative wedge gasket to ACW20034 with tear-away strip to reduce from a 4mm wedge to 3mm wedge.

Bulletin

ACDV309 - Small Magnetic Catch

	Image	Part Code	Pack	Unit	Application
New		ACDV309 Magnetic Catch	1	each	Visofold 1000 2000 3000

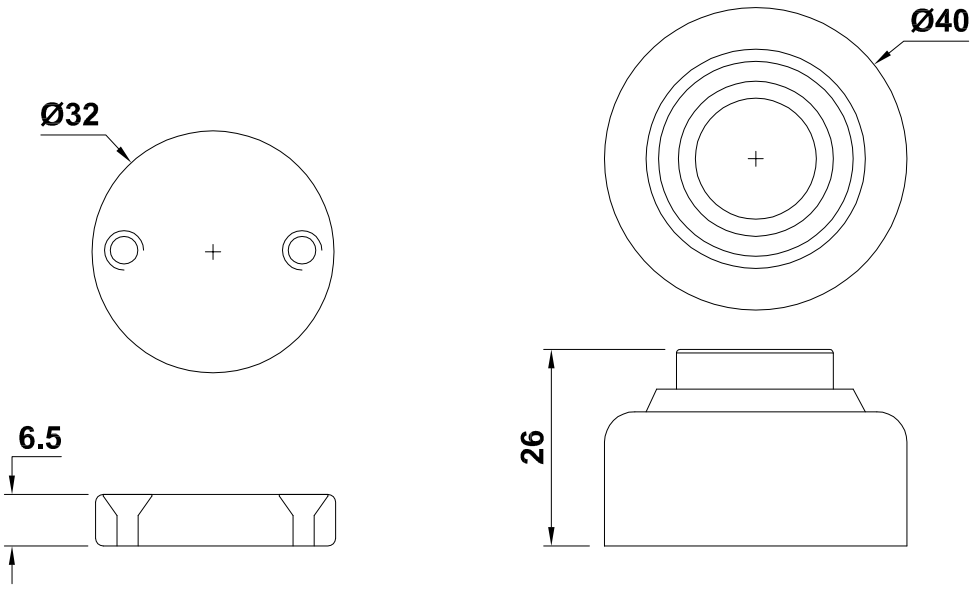

For use on swinging door leafs where lever handles are not present.

The fitting method is the same as ACDV308.

Main Index

Specification

GENERAL DESCRIPTION

The Visofold 2000 described in this manual is suitable for domestic or commercial applications and provides various opening options to increased dimension and weight limitations.

PROFILE SPECIFICATION

The frames are constructed of aluminium alloy extrusion to BS EN 755, extruded from 6063 T6 alloy.
The external aluminium alloy extrusion is pre-treated and finished either in :-

a) Anodised to BS 3987: 1987, grade AA25 to a natural self colour.

b) Polyester powder organic coating to BS 6496.

GENERAL MANUFACTURING

Frames are made by cutting the profiles with accurate 45° mitred ends or 90° square ends as required using Tunsten Carbide Tipped Saw Blades, operating at approximately 3000 rpm.

The joints of the screen are made using mechanically fixed corner cleats unless a low threshold is used which requires stainless steel self tapping screws to be fixed through the vertical members of the outerframe. Door joints are achieved with the use of cleats which fit to the jambs with dog pointed grub screws, the door rails are then fixed over the cleats using an off-set countersunk machine screw to ensure a strong and tight fit suitable for heavy use. Deep bottom rail door joints require stainless steel self tapping screws to be fixed through the vertical members. All joints should be sealed using and adequate sealant.

Care should be exercised when using products not supplied by Smart Systems Ltd as no responsibility can be accepted.

RECOMMENDED DESIGN LIMITATIONS

Minimum Sash Width: 700mm
Maximum Sash Width: 1000mm
Maximum Sash Height: 2500mm (dependant on site conditions)
Maximum Sash Weight: 80kg

Specification

DRAINAGE

As with all dry glazed systems, it is recommended that the system is drained and ventilated as shown in this manual. IF IN DOUBT ASK.

OUTER FRAME MANUFACTURING INFORMATION

The outer frame members are cut with 45° mitred ends to the overall size required.

The mitred ends are then prepared using the punch tool ACDV900 to provide the access for the fixing block and to the grub screw that secures it.

Holes for the low threshold are drilled to the dimensions shown in the manual. All joints should be sealed using ACSIL04

DOOR LEAF MANUFACTURING INFORMATION

The door stiles and rails are cut with 90° square ends to the overall size required.

Prior to assembly the position of any rails should be marked on the stiles. Rail positions should be marked out on both stiles in pairs to ensure accurate alignment of the sections. Cleats are then slid into position and fixed by tightening the dog-pointed grub screw until the end pierces the aluminium. Door rails should have an 5.5mm dia hole 25.5mm in from each end, which are then slid over the cleat and fixed into position using a countersunk machine screw. Deep bottom rail door joints require stainless steel self tapping screws to be fixed through the vertical members. All joints should be sealed using ACSIL04.

Specification

DOOR FITTINGS

Visofold 2000 offers multi-point locking for the primary leaf which is operated via lever/lever handles and locked using a europrofile cylinder.

Secondary doors are closed using a shootbolt which engages into the head and threshold using a rotating handle which operates 170 degrees to allow access to the optional europrofile half cylinder. There is no external access to the shootbolt locking.

The cylinders can be ordered as keyed alike.

GLAZING

All beads are cut to suit the glazing aperture on the fully assemble door for glazing either at factory or on site as required. Glazing is for 28mm double glazed units only

External gaskets are compatible with Pilkington Active sealed units.

Visofold 2000 Weather Performance

BS EN 1026: 2000 Air Permeability:	Class 2 - 300 Pa
BS EN 1027: 2000 Watertightness:	Class 7a - 300 Pa
BS EN 12211: 2000 Resistance to Wind Load:	Class 1800 - 1800Pa

Visofold 2000

Number	Picture	Page	Perim. mm	Mec. mm	Ix(cm4) wx(cm3)	Iy(cm4) wy(cm3)	Length	Pack pr.	MF	SA	KL	HP	M
DV14	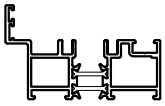	A08	473.7	99.2	37.0 ----- 8.9	7.8 ----- 4.3	6.5	1	X	X	X	X	X
DV23	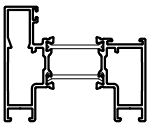	A08	422.1	140.0	43.0 ----- 10.6	16.2 ----- 5.8	6.5	1	X	X	X	X	X
DV24	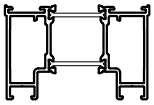	A09	412.7	121.7	41.1 ----- 10.8	14.0 ----- 6.1	6.5	1	X	X	X	X	X
DV25	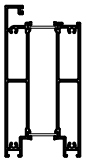	A10	823.9	309.4	105.3 ----- 27.2	279.4 ----- 38.9	6.5	1	X	X	X	X	X
DV51	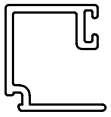	A11	132.09	66.81	0.487 ----- 0.439	3.268 ----- 0.361	6.5	1	X	X	X	X	
DV56	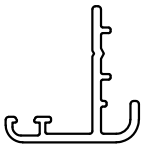	A11	124.91	45.43	0.423 ----- 0.245	3.07 ----- 0.218	6.5	1	X	X	X	X	
DV60	 PVC	A11	-	-	- ----- -	- ----- -	6	1					
DV62	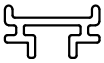	A11	58.91	X	0.007 ----- 0.011	0.488 ----- 0.078	4	1	X				
DV63	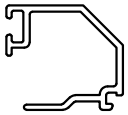	A11	139.07	48.63	0.409 ----- 0.386	4.222 ----- 0.417	6.5	1	X	X	X	X	

A = Outside B = Inside	GOZ = Gold W = White Z = Black	MF = Mill Finish SA = Silver Anodised KL = Basic Colour HP = Special Colour M = Dual Colour

Visofold 2000

Number	Picture	Page	Perim. mm	Mec. mm	Ix(cm4) wx(cm3)	Iy(cm4) wy(cm3)	Length	Pack pr.	MF	SA	KL	HP	M
DV67	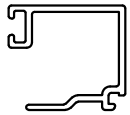	A11	144.27	49.85	0.4577 ----- 0.406	0.4586 ----- 0.499	6.5	1	X	X	X	X	
DV68		A11	98	4.00	- ----- -	- ----- -	6.5	1	X	X	X	X	
DV171	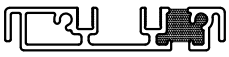	A12	409.30	112.84	1.062 ----- 1.360	23.51 ----- 6.154	6.5	1		X			
DV172	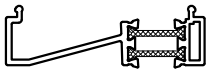	A14	385.73	47.70	0.896 ----- 0.687	17.298 ----- 5.414	6.5	1	X	X	X	X	X
DV173		A13	472.58	119.32	27.13 ----- 7.06	2.16 ----- 2.29	6.5	1		X			
DV174	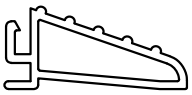	A13	187.42	47.02	0.296 ----- 0.309	16.655 ----- 1.1001	6.5	1		X			
EUD03		A12	112.85	38.59	0.0865 ----- 0.139	12.983 ----- 0.917	4	1	X	X			
PCX15	 PVC	A14	-	-	- ----- -	- ----- -	4	1					
PCX36	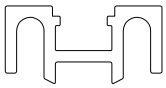 PVC	A14	-	-	- ----- -	- ----- -	3	1					

A = Outside B = Inside	GOZ = Gold W = White Z = Black	MF = Mill Finish SA = Silver Anodised KL = Basic Colour HP = Special Colour M = Dual Colour

Visofold 2000

Number	Picture	Page	Perim. mm	Mec. mm	Ix(cm4) wx(cm3)	Iy(cm4) wy(cm3)	Length	Pack pr.	MF	SA	KL	HP	M
VG52	 PVC 	A14	-	-	- ----- -	- ----- -	7	1	X				
VG53	 	A14	-	-	- ----- -	- ----- -	6.5	1	X				

A = Outside B = Inside	GOZ = Gold W = White Z = Black	MF = Mill Finish SA = Silver Anodised KL = Basic Colour HP = Special Colour M = Dual Colour

Primary Visible Side - - - - - - - - - - - - - - - - - - Secondary Visible Side

DV14

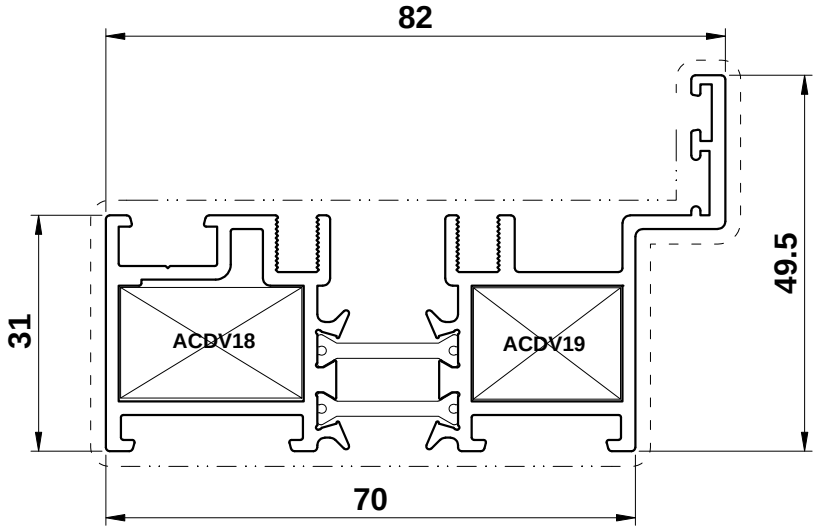

DV23

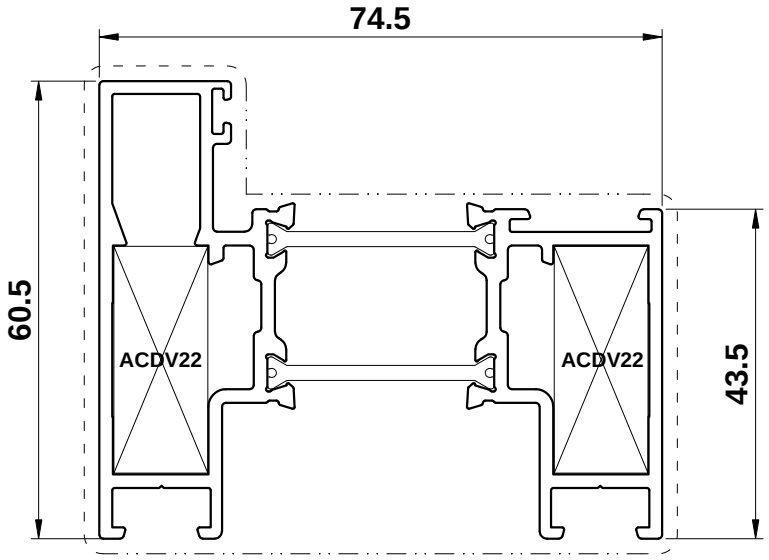

Scale 1:1

Primary Visible Side - - - - - - - - - - - - - - - - - - Secondary Visible Side

DV24

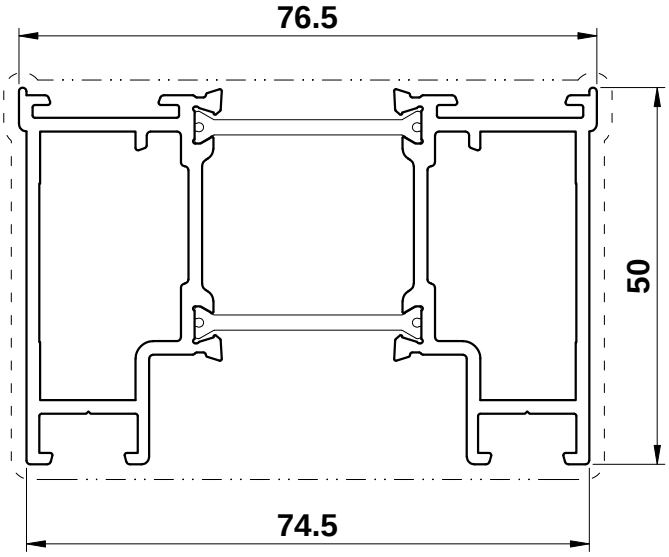

Scale 1:1

Primary Visible Side - - - - - - - - - - - - - - - - - - Secondary Visible Side — · · — · · — · · — · · — · · — · · — · · —

DV25

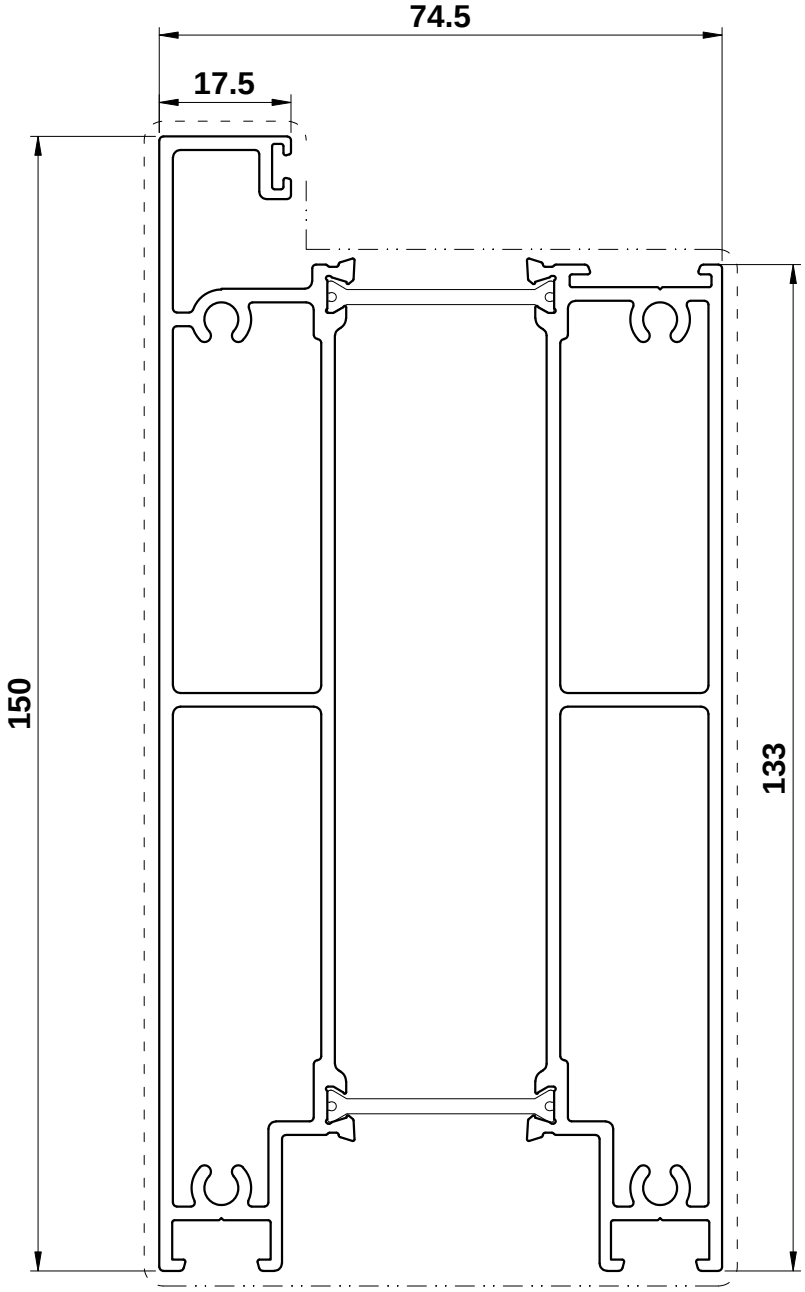

Scale 1:1

Primary Visible Side - - - - - - - - - - - - - - - - - - Secondary Visible Side — · · — · · — · · — · · — · · — · · —

DV51

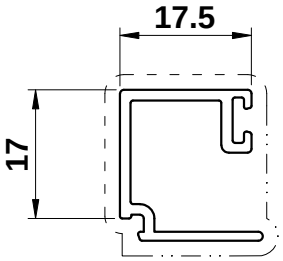

DV56

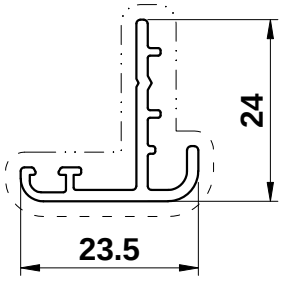

DV60

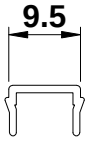

PVC

DV62

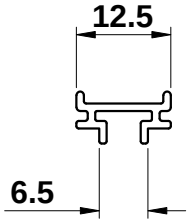

DV63

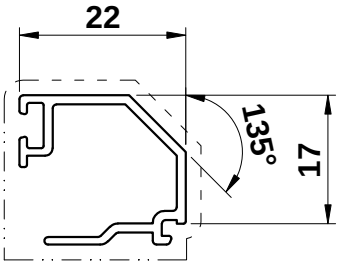

DV67

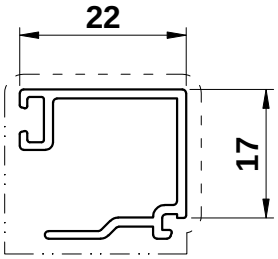

DV68

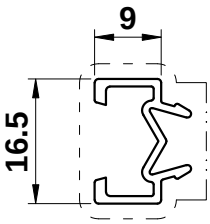

Scale 1:1

Primary Visible Side - - - - - - - - - - - - - - - - - - Secondary Visible Side — · · — · · — · · — · · — · · — · · — · · —

DV171*

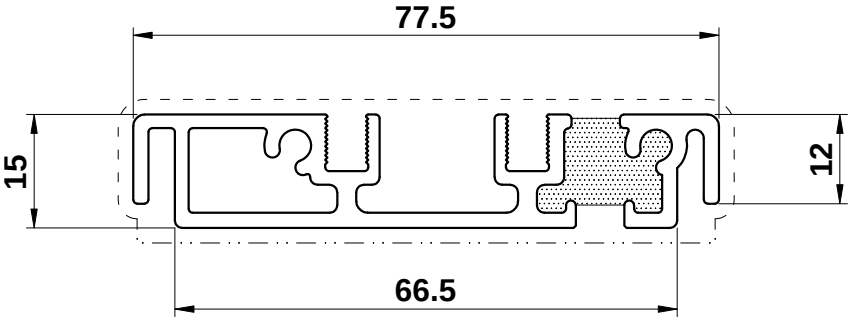

***DV171 is non-rebated. Please use rebated threshold where enhanced weather performance is required.**

EUD03

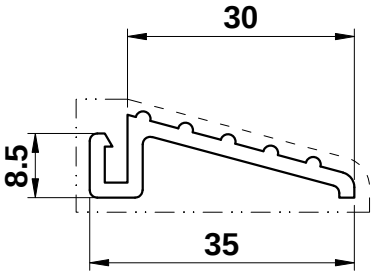

Scale 1:1

Primary Visible Side - - - - - - - - - - - - - - - - - - Secondary Visible Side — · · — · · — · · — · · — · · — · · — · · —

DV173*

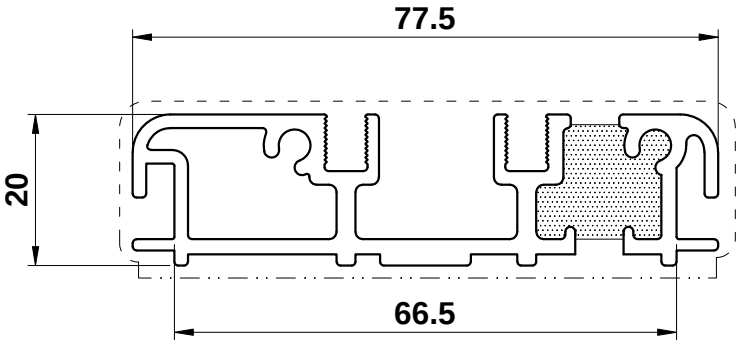

***DV173 is non-rebated. Please use rebated threshold where enhanced weather performance is required.**

DV174

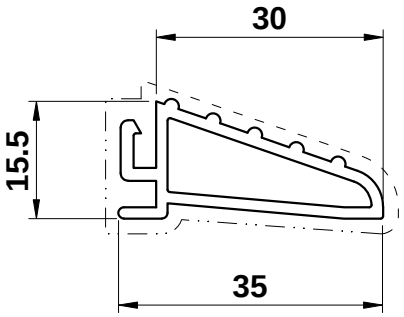

Scale 1:1

Primary Visible Side - - - - - - - - - - - - - - - - - - Secondary Visible Side — · · — · · — · · — · · — · · — · · — · · —

DV172

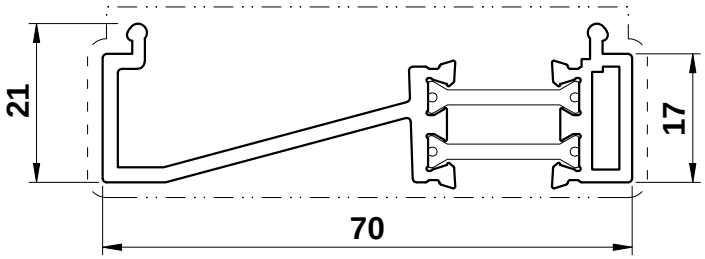

VG52

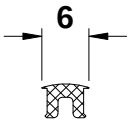

PVC

VG53

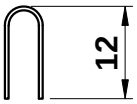

Stainless Steel

PCX15

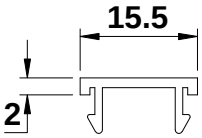

PVC

PCX36

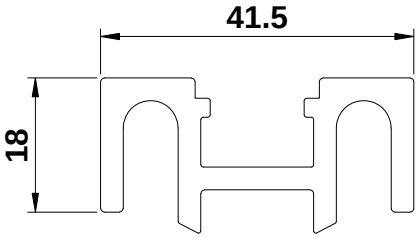

PVC

Scale 1:1

Section B

Visofold 2000

Image	Part Code	Pack	Unit	Application	Colour	
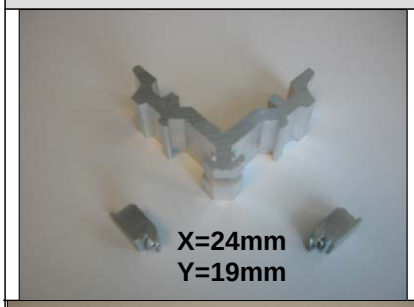 X=24mm Y=19mm	**ACDV18** Cleat	24	each	DV14	MF	X
					SA	
					KL	
					HP	
					M	
					GOZ	
					W	
					Z	
 X=20mm Y=15mm	**ACDV19** Cleat	24	each	DV14	MF	X
					SA	
					KL	
					HP	
					M	
					GOZ	
					W	
					Z	
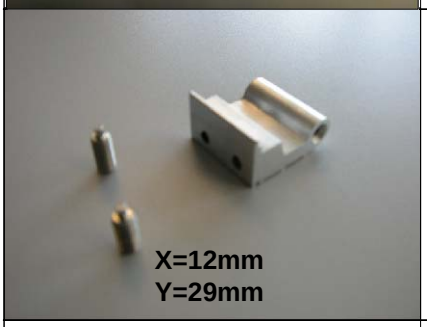 X=12mm Y=29mm	**ACDV22** Square Join Cleat	24	each	DV23	MF	X
					SA	
					KL	
					HP	
					M	
					GOZ	
					W	
					Z	
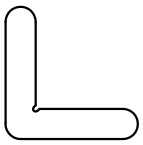	**ACDV24** Chevron	20	each	DV14	MF	X
					SA	
					KL	
					HP	
					M	
					GOZ	
					W	
					Z	
LEFT HAND 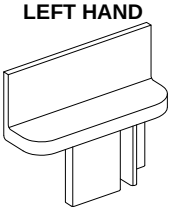 RIGHT HAND 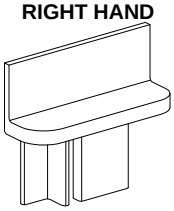	**ACDV56** End Caps	10	Pairs	DV56	MF	
					SA	
					KL	
					HP	
					M	
					GOZ	
					W	X
					Z	X


T-BARS
ACVG65=2.5mm
ACVG66=3.0mm
ACVL150=4.0mm


Screw (Grub)

MF = Mill Finish
SA = Silver Anodised
KL = Basic Colour
HP = Special Colour
M = Dual Colour

GOZ = Gold
W = White
Z = Black

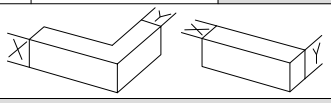

Visofold 2000

Image	Part Code	Pack	Unit	Application	Colour	
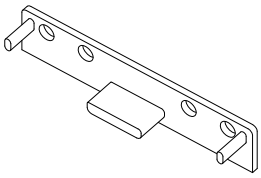	**ACDV171** **Threshold End Cap**	**10**	**each**	**DV171**	MF	
					SA	
					KL	
					HP	
					M	
					GOZ	
					W	
					Z	**X**
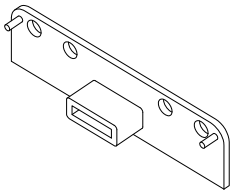	**ACDV173** **Threshold End Cap**	**10**	**each**	**DV173**	MF	
					SA	
					KL	
					HP	
					M	
					GOZ	
					W	
					Z	**X**
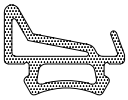	**ACDV202N** **Intermediate Gasket**	**25**	**m**	**DV24**	MF	
					SA	
					KL	
					HP	
					M	
					GOZ	
					W	
					Z	
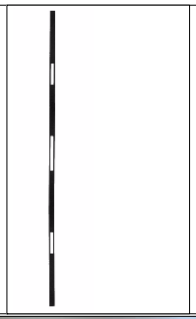	**ACDV220** **38 x 8 x 2000mm Support Plate**	**1**	**each**	**DV24**	MF	
					SA	
					KL	
					HP	
					M	
					GOZ	
					W	
					Z	**X**
	**ACDV225** **Shootbolt Operating Handle with Escutcheon**	**1**	**each**	**DV24** **ACDV227** **ACMX1603**	MF	
					SA	
					KL	
					HP	
					M	
					GOZ	
					W	**X**
					Z	**X**
					PC	**X**

T-BARS
ACVG65=2.5mm
ACVG66=3.0mm
ACVL150=4.0mm

Screw (Grub)

MF = Mill Finish
SA = Silver Anodised
KL = Basic Colour
HP = Special Colour
M = Dual Colour

GOZ = Gold
W = White
Z = Black
PC = Chrome

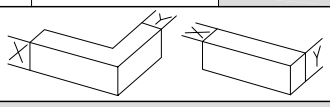

Visofold 2000

Image	Part Code	Pack	Unit	Application	Colour	
	**ACDV226** **Shootbolt Operating Handle for use without cylinder**	**1**	**each**	**DV24** **ACDV227**	MF SA KL HP M GOZ W Z PC	 **X** **X** **X**
	**ACDV227** **Shootbolt Gearbox**	**1**	**each**	**DV24** **ACDV228**	MF SA KL HP M GOZ W Z	**X**
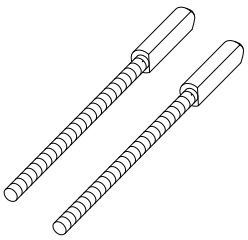	**ACDV228** **Shootbolt Locking Rods - Length 1300mm**	**1**	**pair**	**DV24** **ACDV227**	MF SA KL HP M GOZ W Z	**X**
	**ACDV230** **Gearbox Cover Plate** **Black Only**	**1**	**each**	**DV24**	MF SA KL HP M GOZ W Z	 **X**
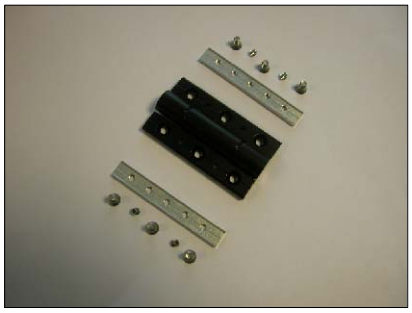	**ACDV231** **Intermediate Hinge Assembly** **Black & White**	**1**	**each**	**DV24**	MF SA KL HP M GOZ W **z**	 **X**

T-BARS
ACVG65=2.5mm
ACVG66=3.0mm
ACVL150=4.0mm

Screw (Grub)

MF = Mill Finish
SA = Silver Anodised
KL = Basic Colour
HP = Special Colour
M = Dual Colour

GOZ = Gold
W = White
Z = Black

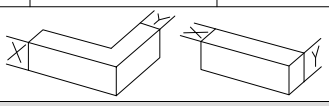

Visofold 2000

Image	Part Code	Pack	Unit	Application	Colour	
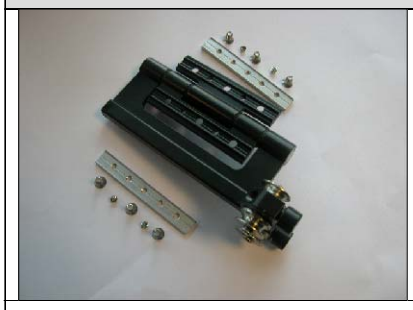	**ACDV232** **Bottom Roller Carrier** **Includes Hinges** **Black & White**	**1**	**each**	**DV24**	MF SA KL HP M GOZ W Z	 **X**
	**ACDV233** **Top Guide Carrier** **Includes Hinges** **Black & White**	**1**	**each**	**DV24**	MF SA KL HP M GOZ W Z	 **X**
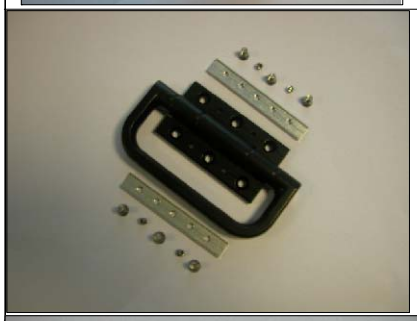	**ACDV234** **D Handle Hinge Assembly** **Note: The chrome version** **of ACDV234 has a black hinge** **& chrome 'D'** **For Open Out Doors** **Black, White & Chrome**	**1**	**each**	**DV24**	MF SA KL HP M GOZ W Z PC	 **X** **X**
	**ACDV241** **Fixing Plate**	**50**	**each**	**DV14** **DV24**	MF SA KL HP M GOZ W Z	**X**
	**ACDV244** **Flipper Gasket**	**100**	**m**	**DV14**	MF SA KL HP M GOZ W Z	 **X**

T-BARS
ACVG65=2.5mm
ACVG66=3.0mm
ACVL150=4.0mm

Screw (Grub)

MF = Mill Finish
SA = Silver Anodised
KL = Basic Colour
HP = Special Colour
M = Dual Colour

GOZ = Gold
W = White
Z = Black
PC = Chrome

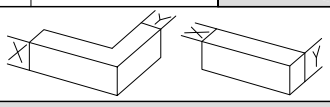

Visofold 2000

Image	Part Code	Pack	Unit	Application	Colour	
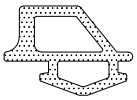	**ACDV245** **Bubble Seal** **Perimeter Only**	**50**	**m**	**DV14**	MF SA KL HP M GOZ W Z	 **X**
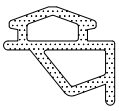	**ACDV246** **Bubble Seal with 'Fin'** **Perimeter Only**	**50**	**m**	**DV24**	MF SA KL HP M GOZ W Z	 **X**
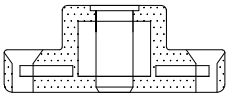	**ACDV248** **Full Height Keep Packer** **Length: 2170mm** **Grey - Keep Packer**	**1**	**each**	**DV24** **ACET060** **ACDV717**	MF SA KL HP M GOZ W Z	**X**
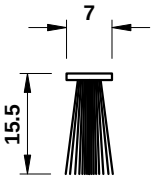	**ACDV249** **Brush Pile (Black)**	**250**	**m**	**DV171** **DV173**	MF SA KL HP M GOZ W Z	 **X**
	**ACDV251** **Lever/Lever Handles**	**1**	**pair**	**DV24** **ACDV717** **ACDV718** **ACDV719**	MF SA KL HP M GOZ W Z PC	 **X** **X** **X**

T-BARS
ACVG65=2.5mm
ACVG66=3.0mm
ACVL150=4.0mm

Screw (Grub)

MF = Mill Finish
SA = Silver Anodised
KL = Basic Colour
HP = Special Colour
M = Dual Colour

GOZ = Gold
W = White
Z = Black
PC = Chrome

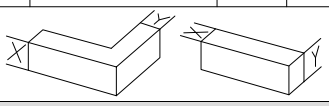

Visofold 2000

Image	Part Code	Pack	Unit	Application		
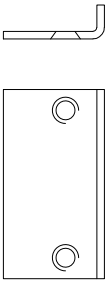	**ACDV252** **Stainless Steel Keep Guide**	**10**	**each**	**DV14** **DV24** **ACDV717** **ACDV718** **ACDV719**	MF SA KL HP M GOZ W Z	**X**
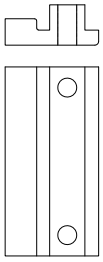	**ACDV253** **Keep Guide Packer**	**5**	**each**	**DV14** **DV24** **ACDV252**	MF SA KL HP M GOZ W Z	**X**
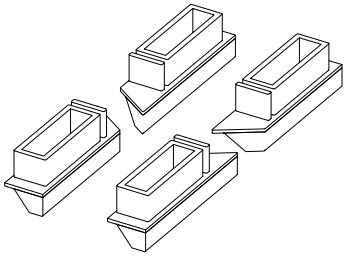	**ACDV257** **Infill Blocks**	**10**	**sets**	**DV24**	MF SA KL HP M GOZ W Z	**X** **X**
	**ACDV258** **50/50 Euro Cylinder for use with ACDV251 only** **<u>For Keyed Alike Order ACDV258 SL</u>**	**1**	**each**	**DV24** **ACDV251** **ACDV717** **ACDV718** **ACDV719**	MF SA KL HP M GOZ W Z	**X**
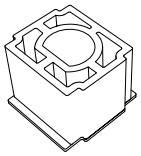	**ACDV259** **Shootbolt Guide**	**10**	**each**	**DV24** **ACDV228**	MF SA KL HP M GOZ W **Z**	**X**

T-BARS
ACVG65=2.5mm
ACVG66=3.0mm
ACVL150=4.0mm

Screw (Grub)

MF = Mill Finish
SA = Silver Anodised
KL = Basic Colour
HP = Special Colour
M = Dual Colour

GOZ = Gold
W = White
Z = Black

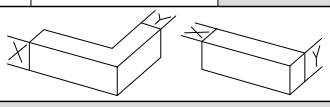

Visofold 2000

Image	Part Code	Pack	Unit	Application	Colour	
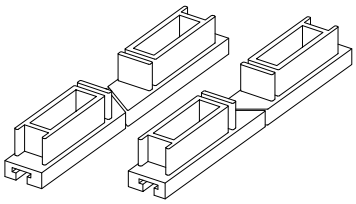	**ACDV261** **End Caps with Wool Pile Channel** **For Low Threshold**	**10**	**sets**	**DV24** **DV171** **DV173** **ACDV249**	MF SA KL HP M GOZ W Z	 **X** **X**
	**ACDV262** **M4 x 50 CSK S/S Screw**	**100**	**each**	**DV24** **ACDV717**	MF SA KL HP M GOZ W Z	**X**
	**ACDV264** **M4 x 35 CSK S/S Screw**	**100**	**each**	**DV24** **ACDV718** **ACDV719**	MF SA KL HP M GOZ W Z	**X**
	**ACDV265** **M4 x 60 CSK S/S Screw**	**100**	**each**	**DV24** **ACDV718** **ACDV719**	MF SA KL HP M GOZ W Z	**X**
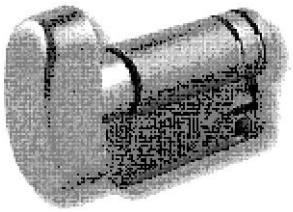	**ACDV267** **Half Cylinder with Thumb Turn**	**1**	**each**	**ACDV225** **ACDV227**	MF SA KL HP M GOZ W Z	**X**

T-BARS
ACVG65=2.5mm
ACVG66=3.0mm
ACVL150=4.0mm

Screw (Grub)

MF = Mill Finish
SA = Silver Anodised
KL = Basic Colour
HP = Special Colour
M = Dual Colour

GOZ = Gold
W = White
Z = Black
PC = Chrome

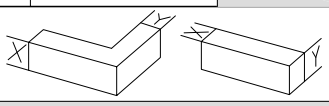

Visofold 2000

Image	Part Code	Pack	Unit	Application	Colour	
	**ACDV274** **D Handle Hinge Assembly** **Note: The chrome version of ACDV234 has a black hinge & chrome 'D'** **For Open In Doors** **Black, White & Chrome**	**1**	**each**	**DV24**	MF SA KL HP M GOZ W Z PC	 **X** **X** **X**
	**ACDV308** **Magnetic Door Holder**	**1**	**each**	**DV23**	MF SA KL HP M GOZ W Z PC	 **X**
	**ACDV717** **Multi Point Lock Kit** **Includes Lock & Keep Only**	**1**	**each**	**DV24** **ACMX108** **ACMX109** **ACMX120** **ACIM442** **ACDV251**	MF SA KL HP M GOZ W Z	**X**

T-BARS
ACVG65=2.5mm
ACVG66=3.0mm
ACVL150=4.0mm

Screw (Grub)

MF = Mill Finish
SA = Silver Anodised
KL = Basic Colour
HP = Special Colour
M = Dual Colour

GOZ = Gold
W = White
Z = Black
PC = Chrome

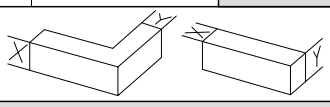

Visofold 2000

Image	Part Code	Pack	Unit	Application	Colour
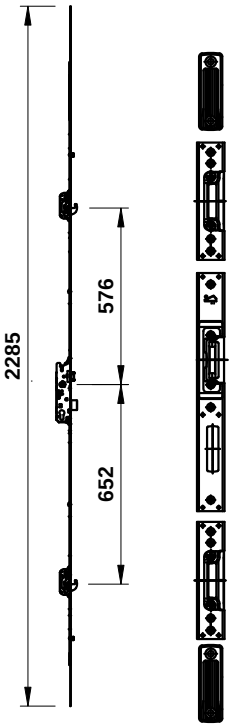	**ACDV718** **Multi Point Lock Kit with LEFT HAND Centre Keep** **Viewed Externally** 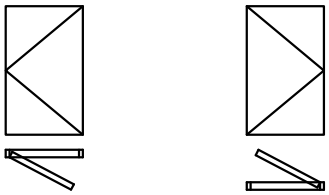 **Left Hand Open Out** **Right Hand Open In**	1	each	DV24 ACDV251 PCX36	MF X SA KL HP M GOZ W Z
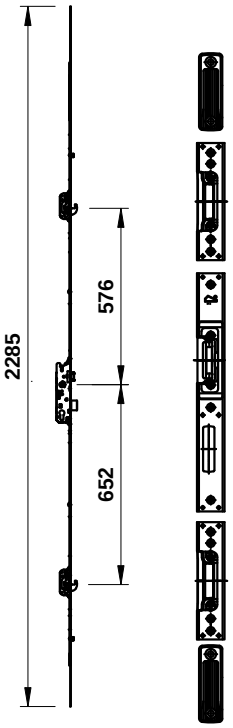	**ACDV719** **Multi Point Lock Kit with RIGHT HAND Centre Keep** **Viewed Externally** 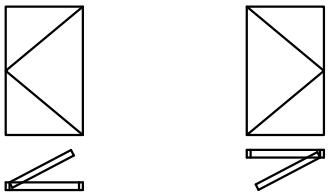 **Left Hand Open In** **Right Hand Open Out**	1	each	DV24 ACDV251 PCX36	MF X SA KL HP M GOZ W Z

T-BARS
ACVG65=2.5mm
ACVG66=3.0mm
ACVL150=4.0mm

Screw (Grub)

MF = Mill Finish
SA = Silver Anodised
KL = Basic Colour
HP = Special Colour
M = Dual Colour

GOZ = Gold
W = White
Z = Black

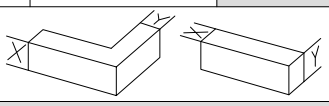

Visofold 2000

Image	Part Code	Pack	Unit	Application	Colour	
	**ACDV900** **Punch Tool**	**1**	**each**	**DV14**	MF	X
					SA	
					KL	
					HP	
					M	
					GOZ	
					W	
					Z	
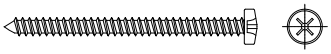	**ACDR052** **No. 10 x 50 Pan Head S/S Self Tapper**	**200**	**pack**	**DV25** **DV171** **DV173**	MF	X
					SA	
					KL	
					HP	
					M	
					GOZ	
					W	
					Z	
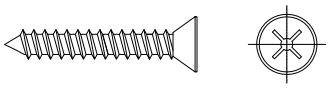	**ACET060** **No. 7 x 1 CSK S/S Self Tapper**	**100**	**pack**	**ACDV248** **ACDV252**	MF	X
					SA	
					KL	
					HP	
					M	
					GOZ	
					W	
					Z	
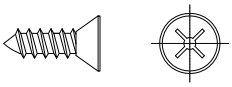	**ACET067** **No. 7 x $\frac{1}{2}$ CSK S/S Self Tapper**	**100**	**pack**	**DV56**	MF	X
					SA	
					KL	
					HP	
					M	
					GOZ	
					W	
					Z	
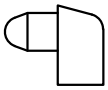	**ACET131** **Drainage Cap**	**100**	**pack**	**DV23** **DV25** **DV171** **DV173**	MF	
					SA	
					KL	
					HP	
					M	
					GOZ	
					W	X
					Z	X

T-BARS
ACVG65=2.5mm
ACVG66=3.0mm
ACVL150=4.0mm

Screw (Grub)

MF = Mill Finish
SA = Silver Anodised
KL = Basic Colour
HP = Special Colour
M = Dual Colour

GOZ = Gold
W = White
Z = Black

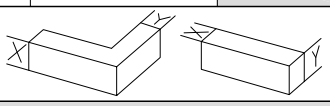

Visofold 2000

Image	Part Code	Pack	Unit	Application		
	**ACIM442** **40/40 Cylinder** **For Keyed Alike Order** **ACMX01603SL**	**1**	**each**	**DV24** **ACMX120** **ACDV717** **ACDV718** **ACDV719**	MF SA KL HP M GOZ W Z	X
	**ACMX01603** **40 Half Cylinder** **For Keyed Alike Order** **ACMX01603SL**	**1**	**each**	**ACDV225** **ACDV227**	MF SA KL HP M GOZ W Z	X
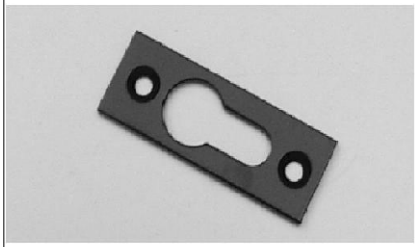	**ACMX108** **Escutcheon**	**1**	**each**	**ACMX120**	MF SA KL HP M GOZ W Z	X X X X
	**ACMX120** **Lever Handle**	**1**	**each**	**DV24** **ACDV717**	MF SA KL HP M GOZ W Z	X X X X X X
	**ACMX309** **130mm x 8 x 8 Spindle**	**1**	**each**	**ACMX120**	MF SA KL HP M GOZ W Z	

T-BARS
ACVG65=2.5mm
ACVG66=3.0mm
ACVL150=4.0mm

Screw (Grub)

MF = Mill Finish
SA = Silver Anodised
KL = Basic Colour
HP = Special Colour
M = Dual Colour

GOZ = Gold
W = White
Z = Black

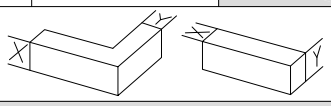

Visofold 2000

Image	Part Code	Pack	Unit	Application	Colour	
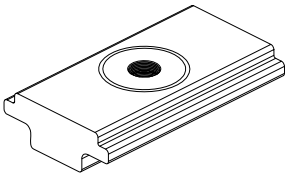	**ACSG023** **M4 Fixing Plate**	**50**	**each**	**DV14** **ACDV717** **ACDV718** **ACDV719** **ACSG071**	MF	X
					SA	
					KL	
					HP	
					M	
					GOZ	
					W	
					Z	
	**ACVG31** **3mm Retained Gasket**	**200**	**m**	**DV23** **DV24** **DV25**	MF	
					SA	
					KL	
					HP	
					M	
					GOZ	
					W	
					Z	
	**ACVG34** **5mm Wedge Gasket**	**100**	**m**	**DV23** **DV24** **DV25**	MF	
					SA	
					KL	
					HP	
					M	
					GOZ	
					W	
					Z	X
	**ACVL032** **Flipper Gasket**	**100**	**m**	**DV56**	MF	
					SA	
					KL	
					HP	
					M	
					GOZ	
					W	
					Z	X
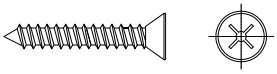	**MUA025SSZ** **No. 6 x 1" CSK S/S Self Tapper**	**100**	**each**	**ACDV308**	MF	X
					SA	
					KL	
					HP	
					M	
					GOZ	
					W	
					Z	

T-BARS
ACVG65=2.5mm
ACVG66=3.0mm
ACVL150=4.0mm

Screw (Grub)

MF = Mill Finish
SA = Silver Anodised
KL = Basic Colour
HP = Special Colour
M = Dual Colour

GOZ = Gold
W = White
Z = Black

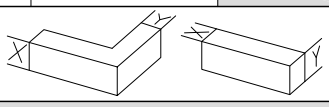

Visofold 2000

Image	Part Code	Pack	Unit	Application	Colour	
	**ACMX09700** **Alu. Polish**	**1**	**each**		MF	**X**
					SA	
					KL	
					HP	
					M	
					GOZ	
					W	
					Z	
	**ACMX09761** **Maxi Gloss**	**1**	**each**		MF	
					SA	
					KL	
					HP	
					M	
					GOZ	
					W	
					Z	
	**ACMX09762** **Alu. Bright**	**1**	**each**		MF	
					SA	
					KL	
					HP	
					M	
					GOZ	
					W	
					Z	
	**ACMX09763** **Teflon Spray**	**1**	**each**		MF	
					SA	
					KL	
					HP	
					M	
					GOZ	
					W	
					Z	
	**ACMX09764** **Maxi Clean**	**1**	**each**		MF	
					SA	
					KL	
					HP	
					M	
					GOZ	
					W	
					Z	

T-BARS
ACVG65=2.5mm
ACVG66=3.0mm
ACVL150=4.0mm

Screw (Grub)

MF = Mill Finish
SA = Silver Anodised
KL = Basic Colour
HP = Special Colour
M = Dual Colour
GOZ = Gold
W = White
Z = Black

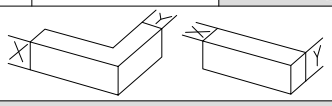

Visofold 2000

Image	Part Code	Pack	Unit	Application	Colour
	**ACMX09765** **Alu. Cleaner**	**1**	**each**		MF SA KL HP M GOZ W Z
	**ACMX09770** **Roll & Wrap 100mm**	**1**	**each**		MF SA KL HP M GOZ W Z
	**ACMX09775** **Grip Handwrap**	**1**	**each**		MF SA KL HP M GOZ W Z
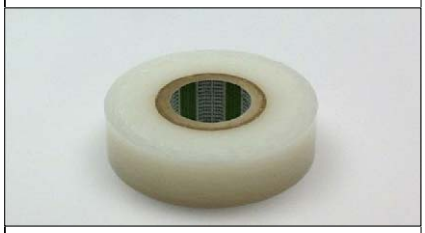	**ACMX09801** **Protective Tape 50mm**	**1**	**each**		MF SA KL HP M GOZ W Z
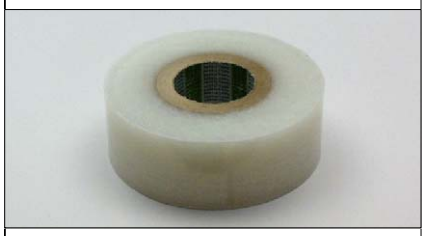	**ACMX09802** **Protective Tape 70mm**	**1**	**each**		MF SA KL HP M GOZ W **Z**

T-BARS
ACVG65=2.5mm
ACVG66=3.0mm
ACVL150=4.0mm

Screw (Grub)

MF = Mill Finish
SA = Silver Anodised
KL = Basic Colour
HP = Special Colour
M = Dual Colour
GOZ = Gold
W = White
Z = Black

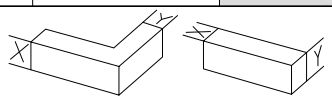

Visofold 2000

Image	Part Code	Pack	Unit	Application	Colour	
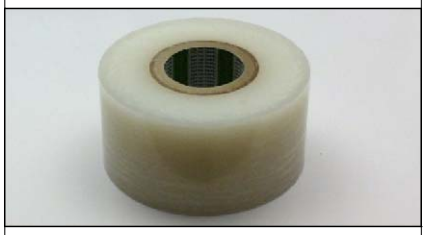	**ACMX09803** **Protective Tape 100mm**	**1**	**each**		MF	
					SA	
					KL	
					HP	
					M	
					GOZ	
					W	
					Z	
	**ACMX09830** **Rubber Sealant**	**1**	**each**		MF	
					SA	
					KL	
					HP	
					M	
					GOZ	
					W	
					Z	
	**ACSIL04** **Sealing Glue**	**1**	**each**		MF	
					SA	
					KL	
					HP	
					M	
					GOZ	
					W	**X**
					Z	**X**
	**ACSIL08** **Silicon Gun**	**1**	**each**		MF	
					SA	
					KL	
					HP	
					M	
					GOZ	
					W	
					Z	
	**ACSIL013** **Glue for Mitre**	**1**	**each**		MF	
					SA	
					KL	
					HP	
					M	
					GOZ	
					W	
					Z	

T-BARS
ACVG65=2.5mm
ACVG66=3.0mm
ACVL150=4.0mm

Screw (Grub)

MF = Mill Finish
SA = Silver Anodised
KL = Basic Colour
HP = Special Colour
M = Dual Colour
GOZ = Gold
W = White
Z = Black

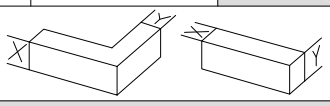

Section C

Open Out

Type 2e

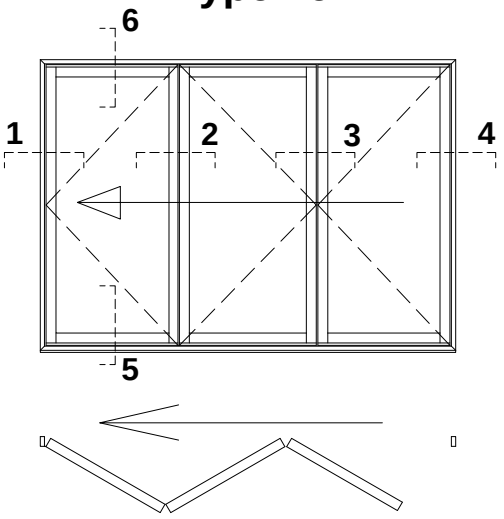

Type 4e

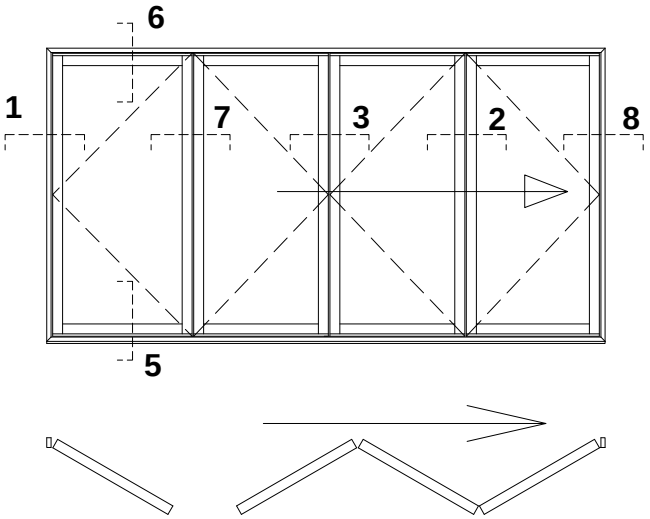

Do Not Scale From This Drawing

Open Out

Type 6e

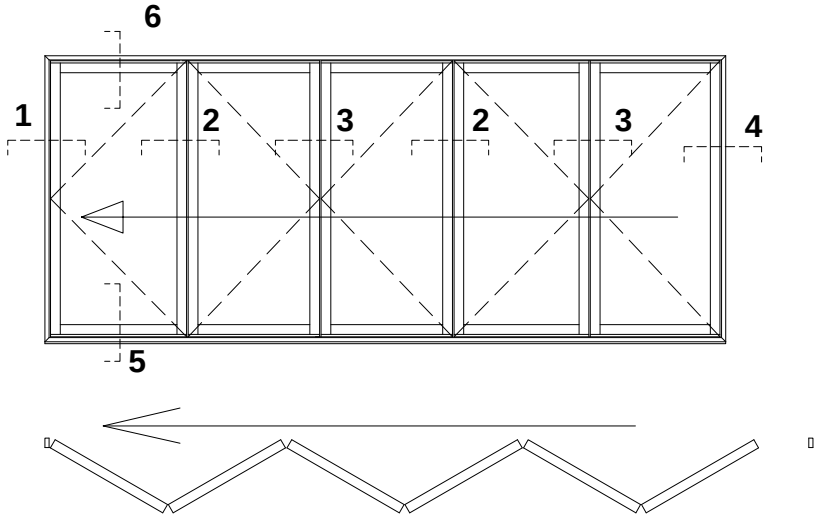

Type 7e

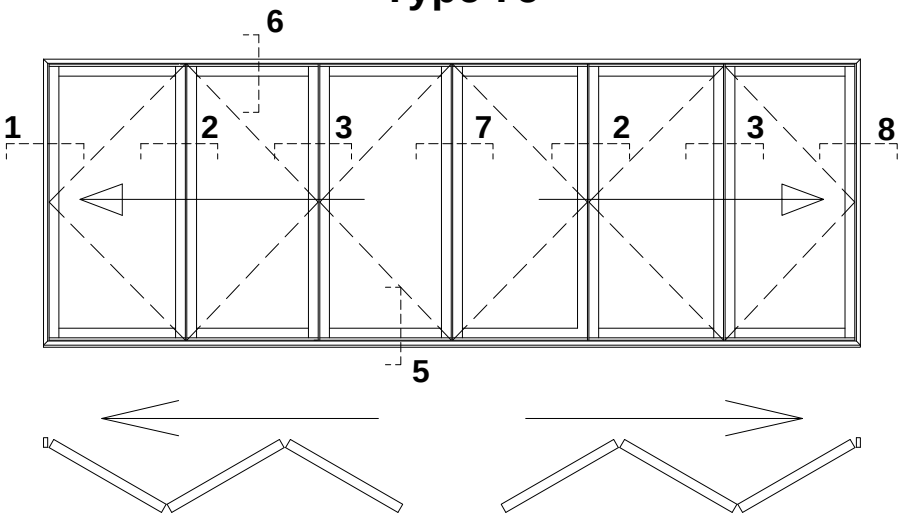

Do Not Scale From This Drawing

Open Out

Single Door

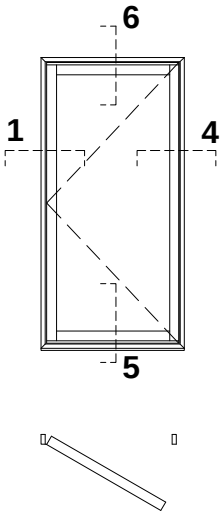

Double Door

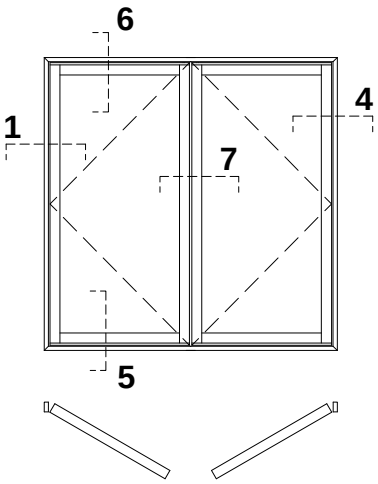

Do Not Scale From This Drawing

Open Out - Detail 1

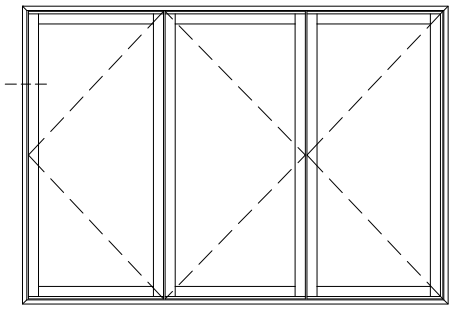

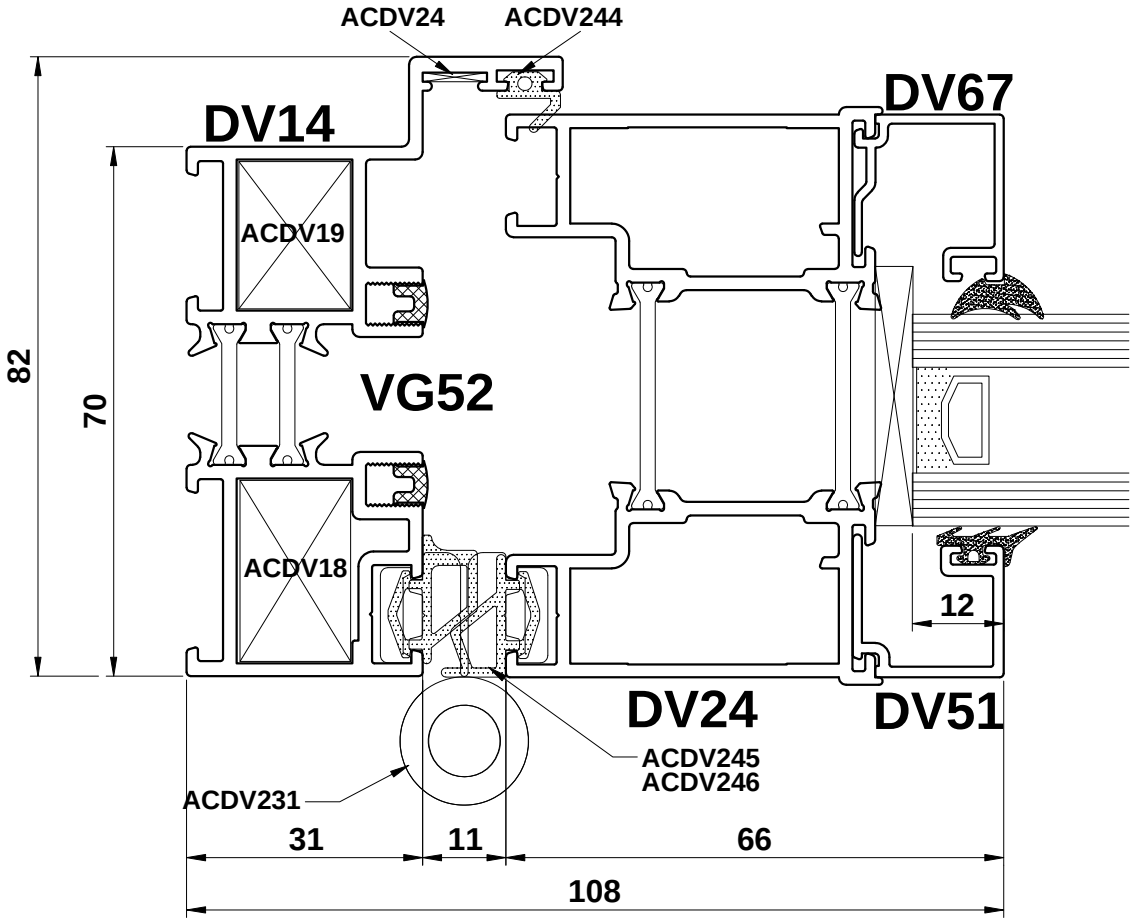

Do Not Scale From This Drawing

Visofold 2000

Open Out - Detail 2

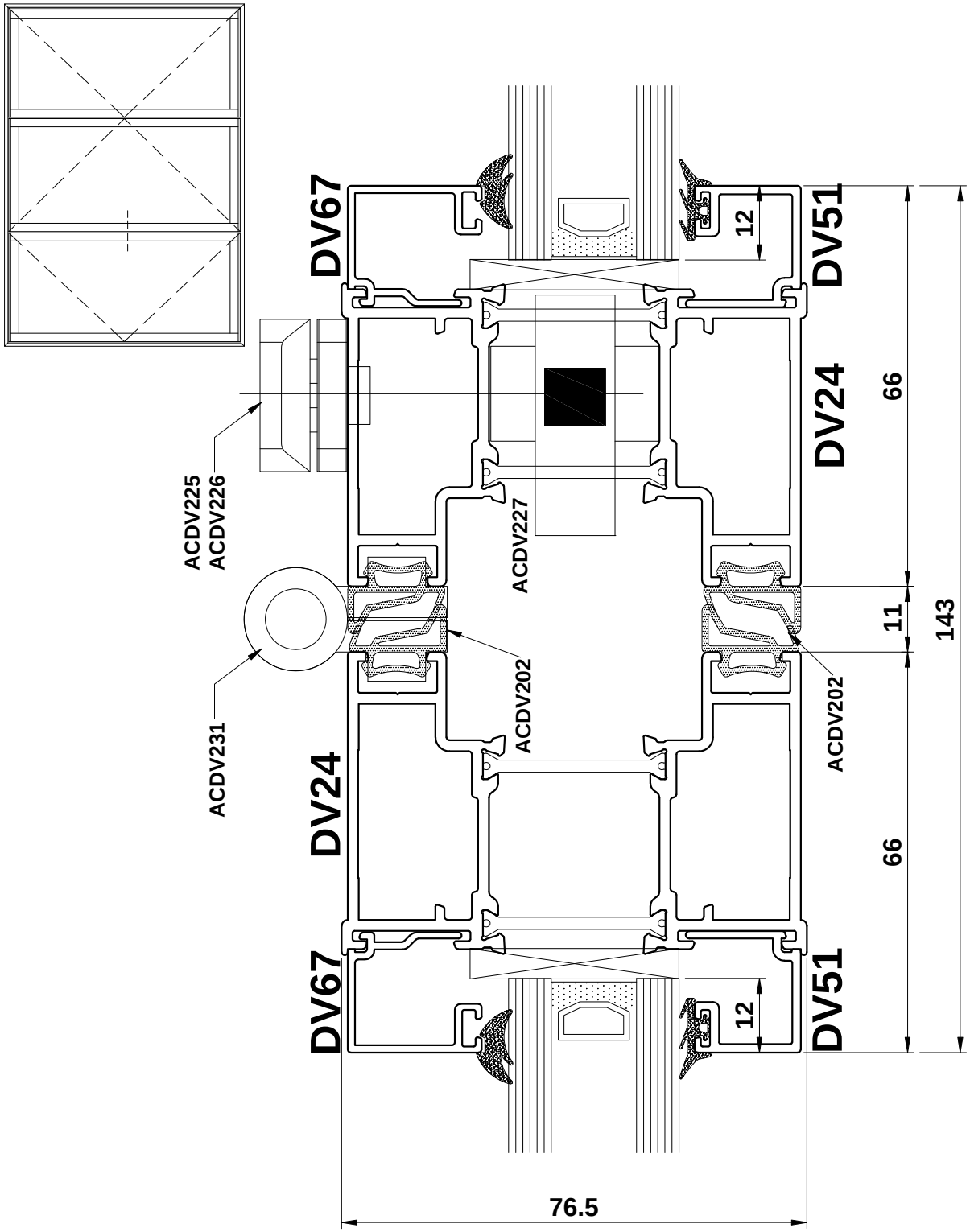

Do Not Scale From This Drawing

Open Out - Detail 3

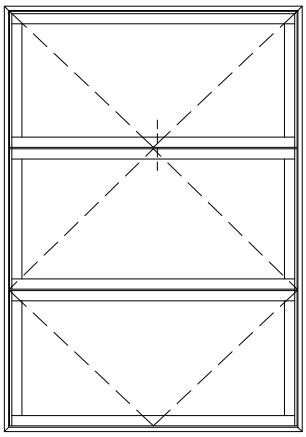

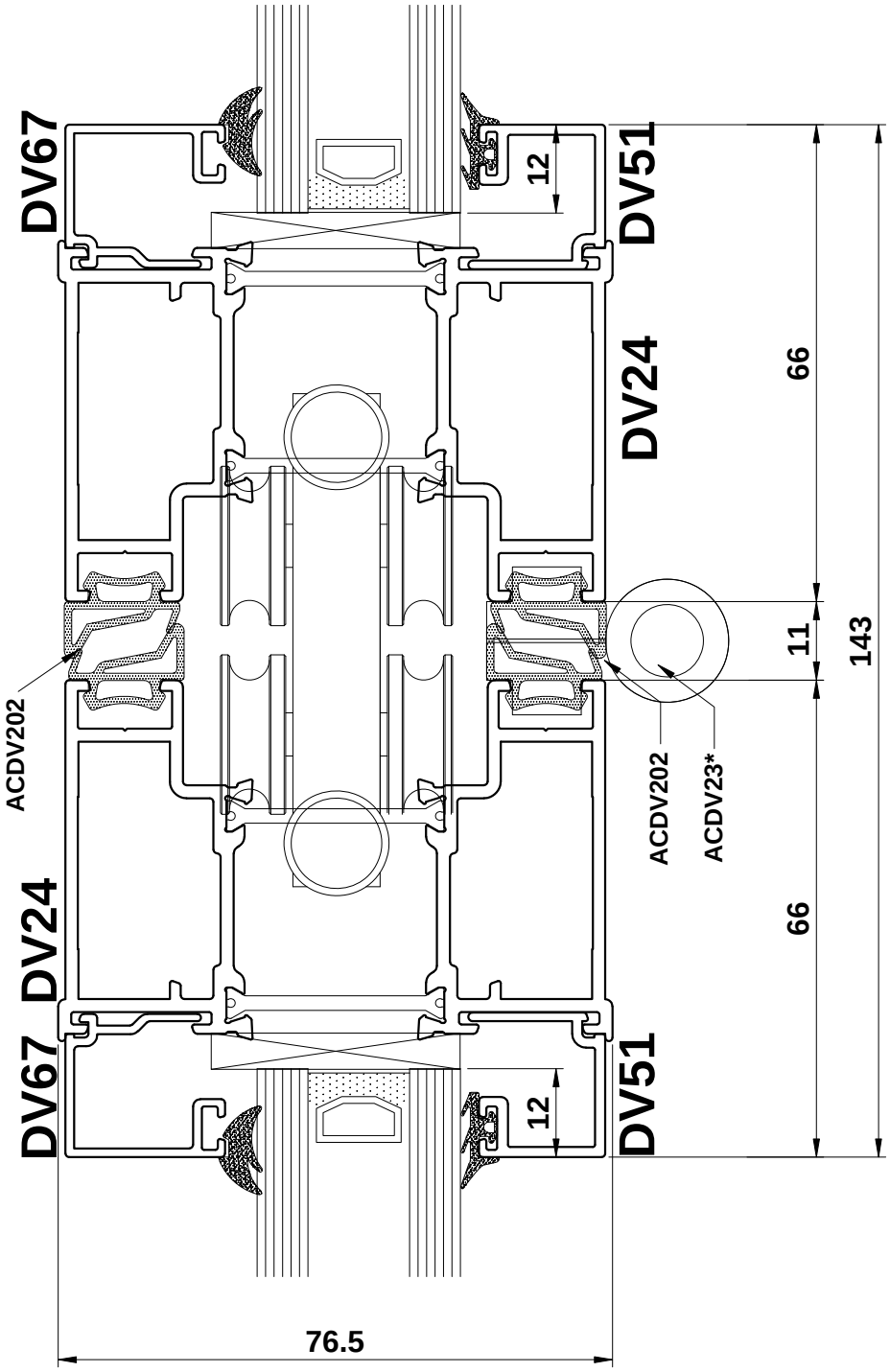

Do Not Scale From This Drawing

Open Out - Detail 4

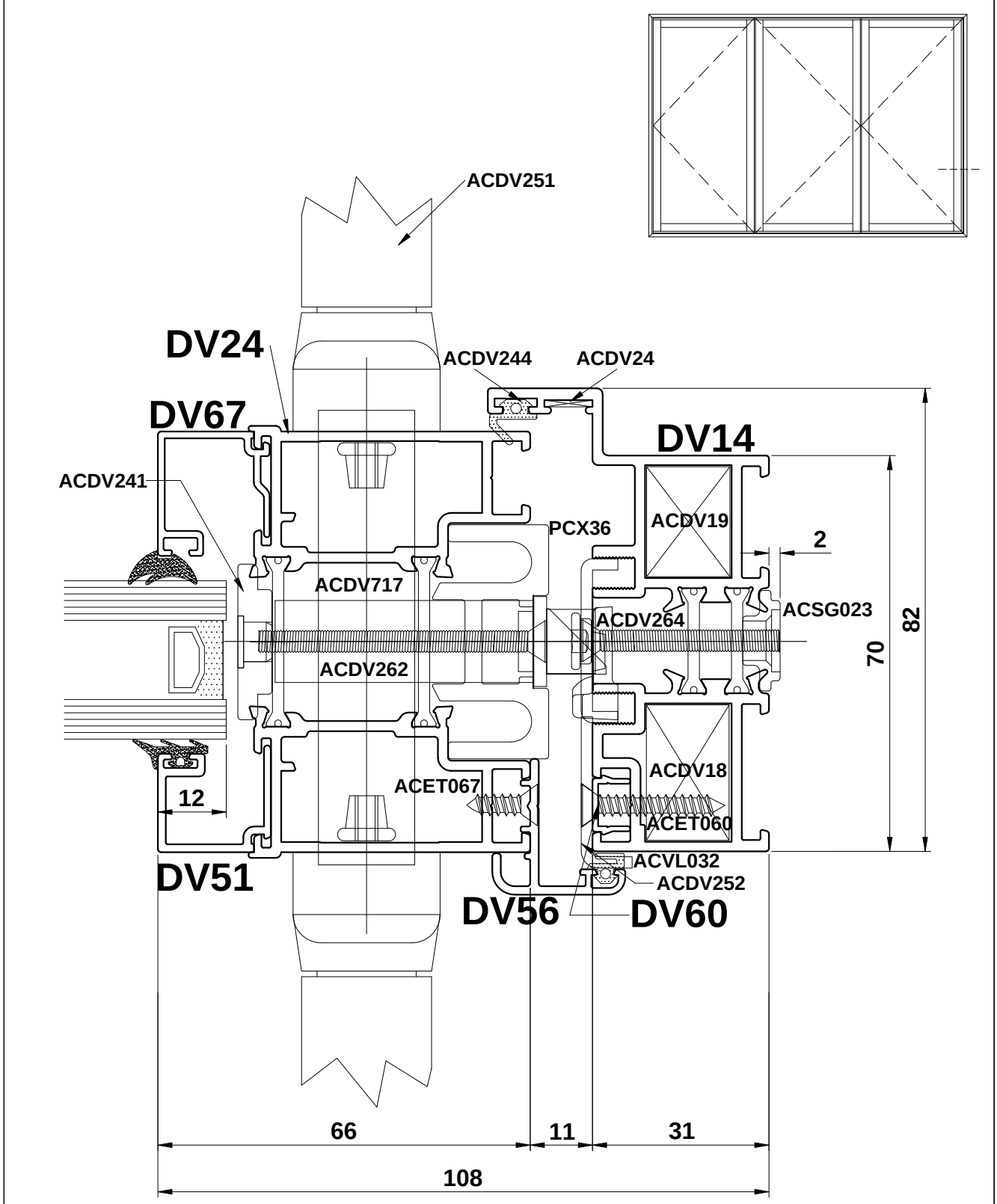

Do Not Scale From This Drawing

Open Out - Detail 5A

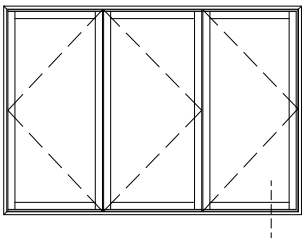

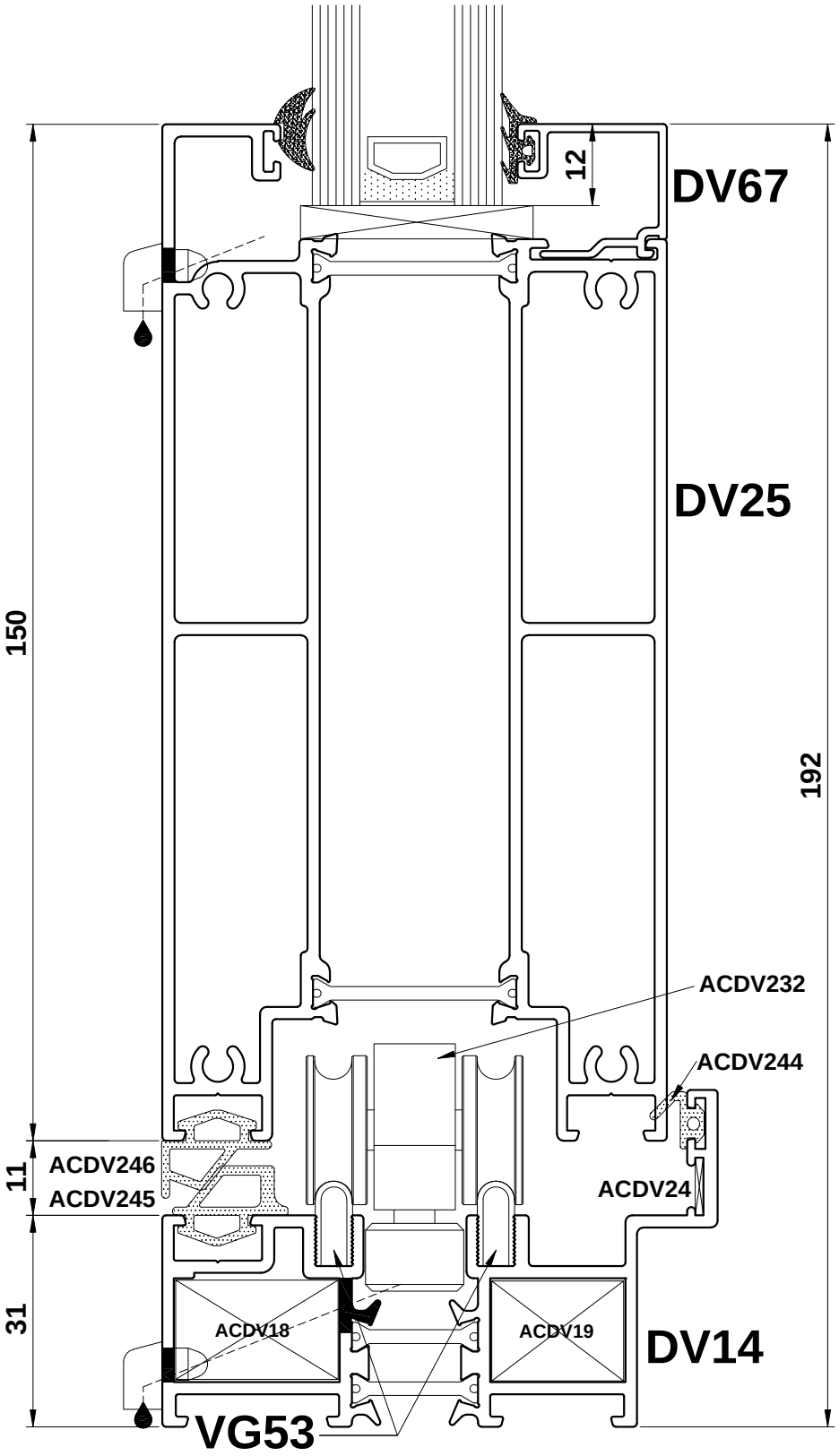

Do Not Scale From This Drawing

Open Out - Detail 5B

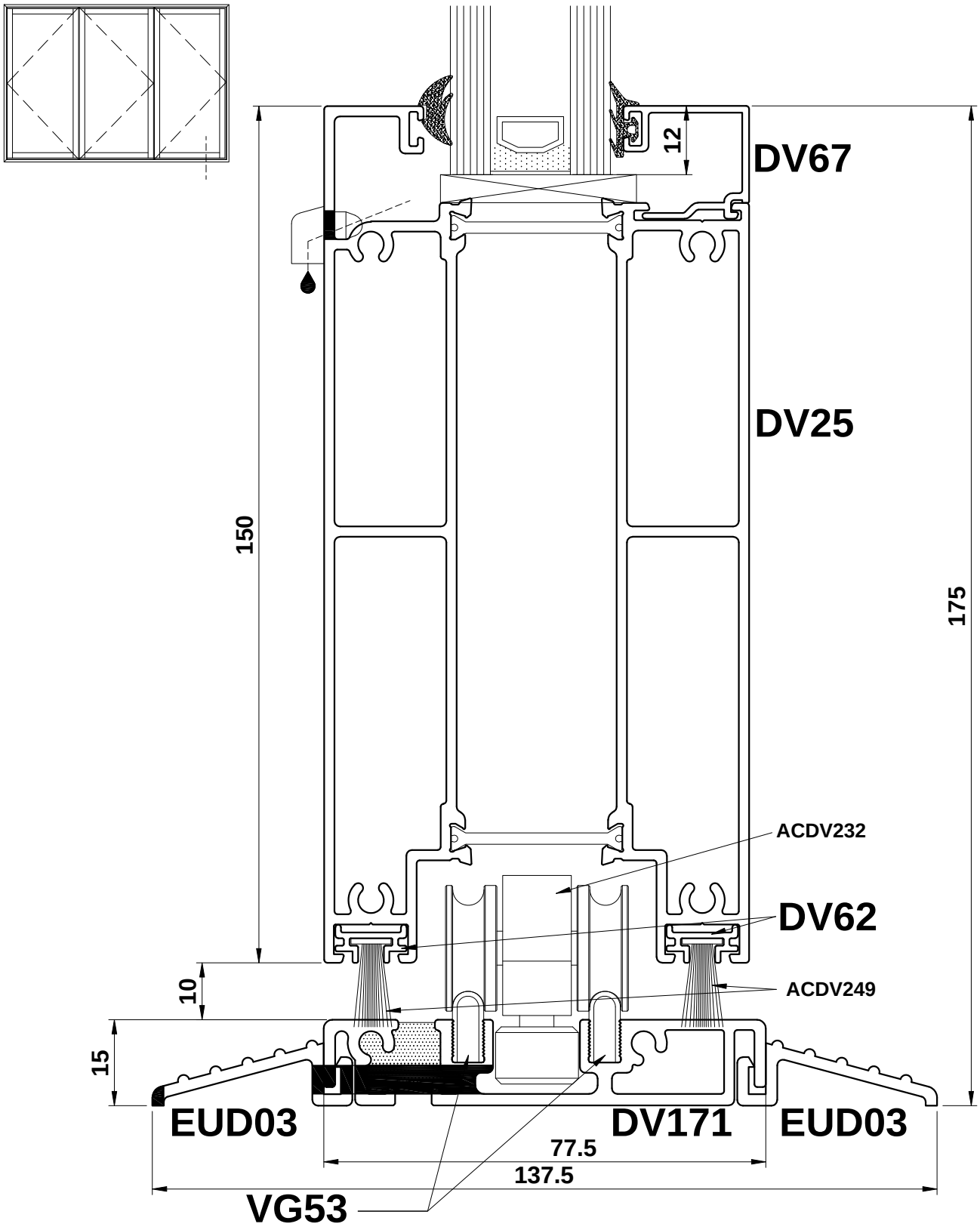

Do Not Scale From This Drawing

Open Out - Detail 5C

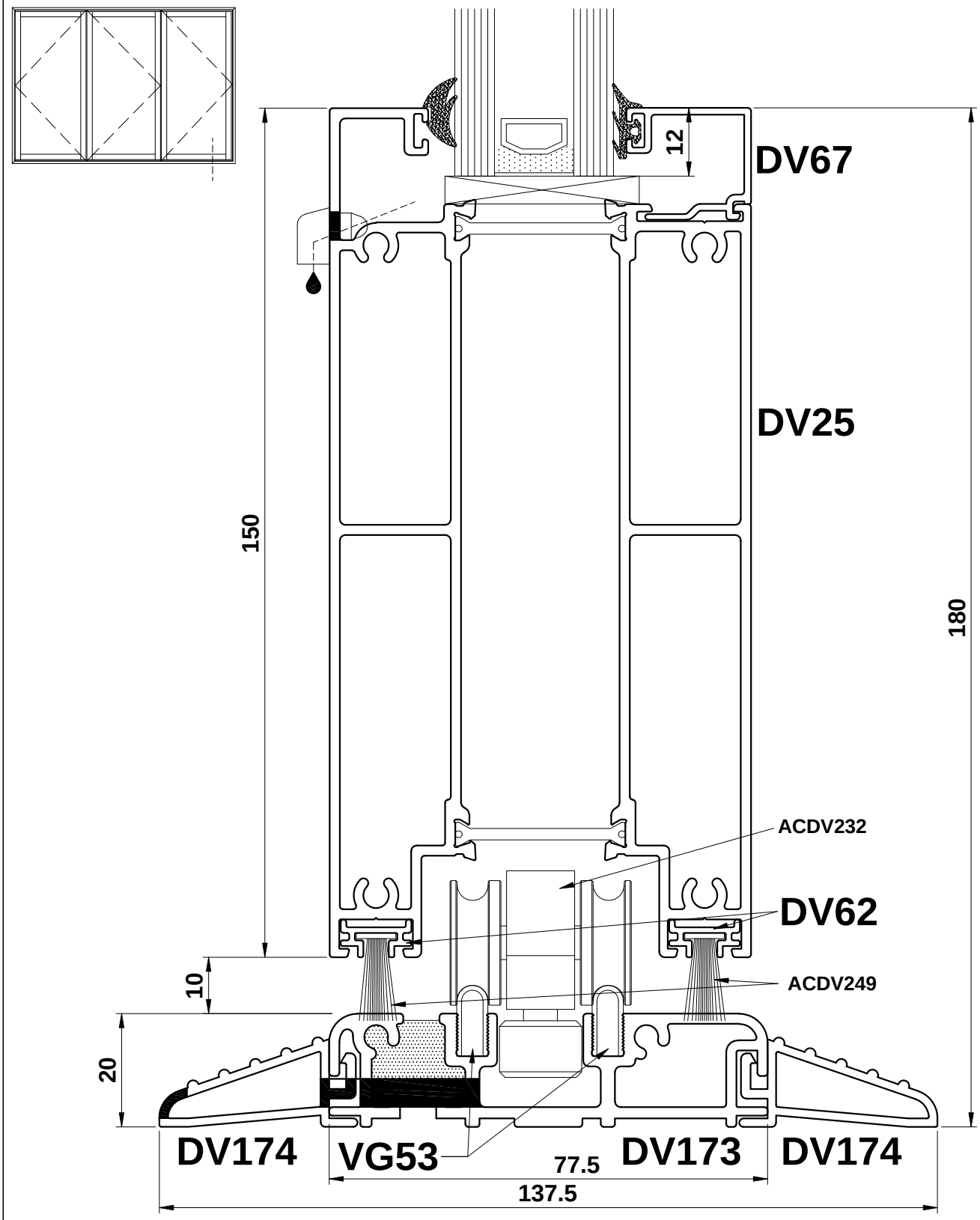

Do Not Scale From This Drawing

Open Out - Detail 5D

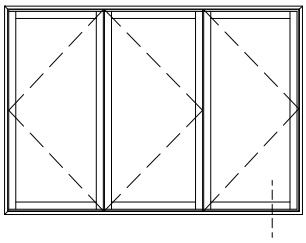

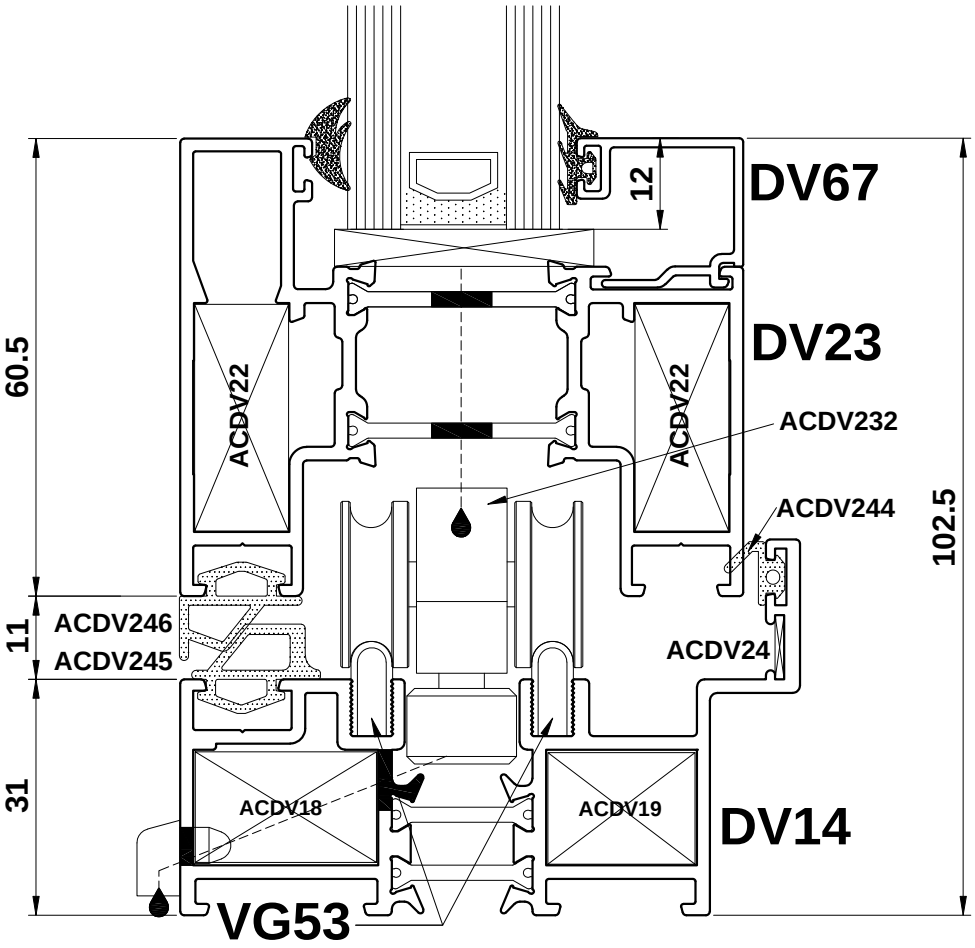

Do Not Scale From This Drawing

Open Out - Detail 5E

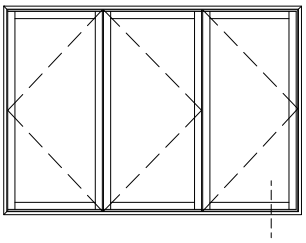

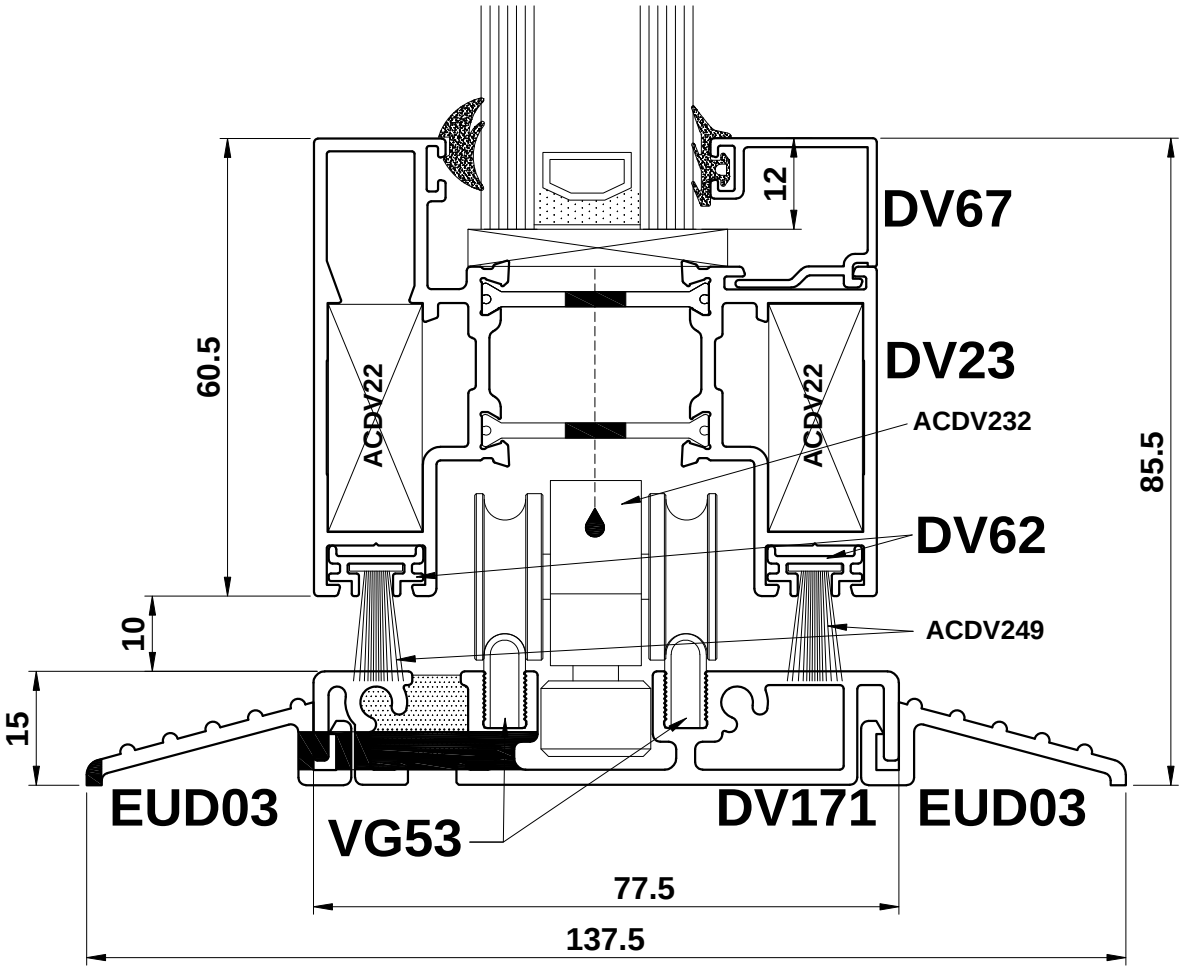

Do Not Scale From This Drawing

Open Out - Detail 5F

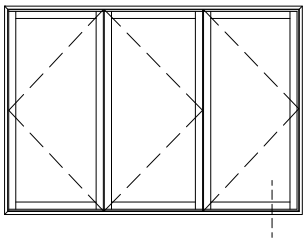

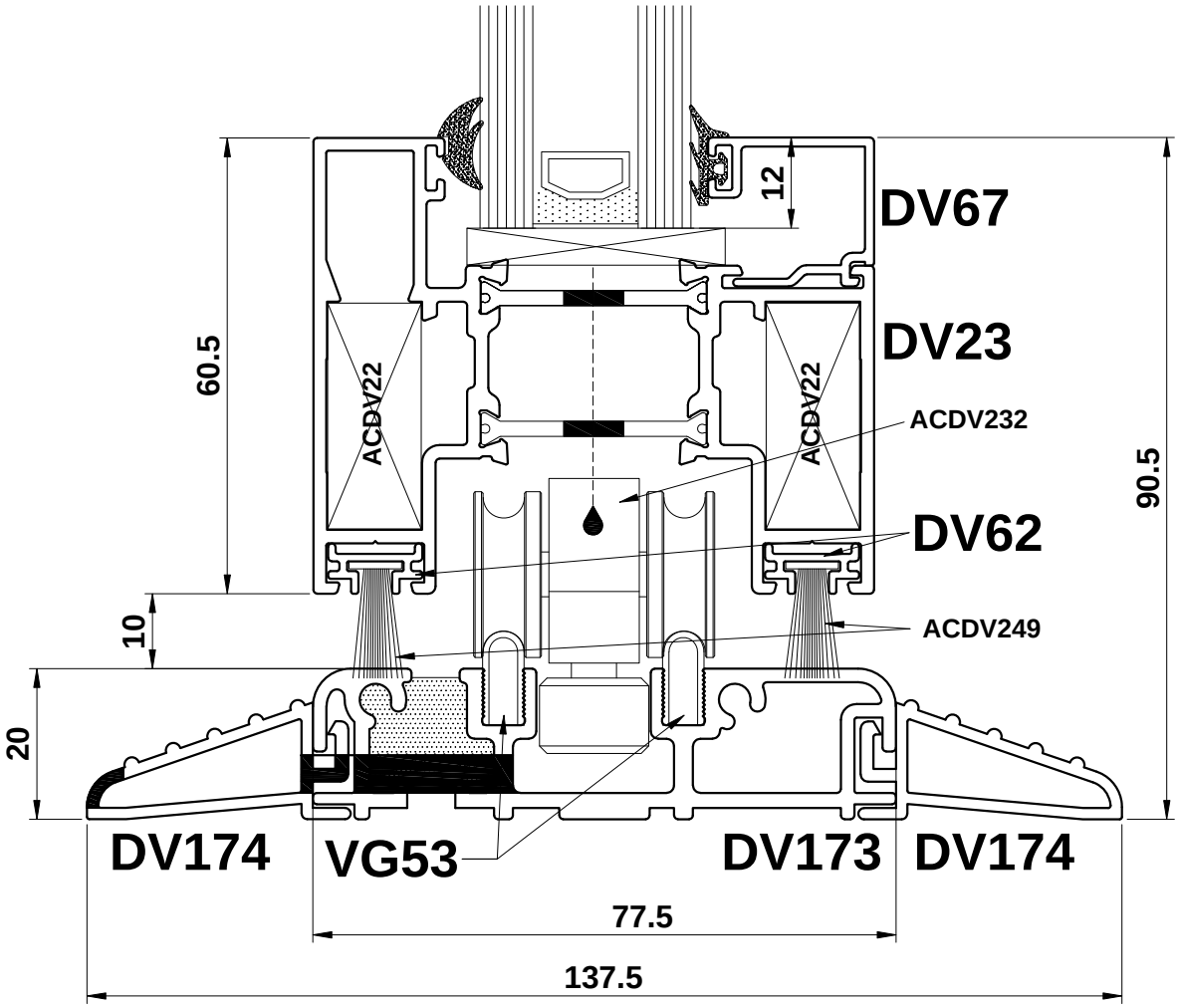

Do Not Scale From This Drawing

Open Out - Detail 6

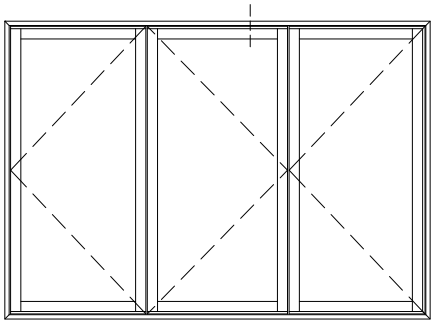

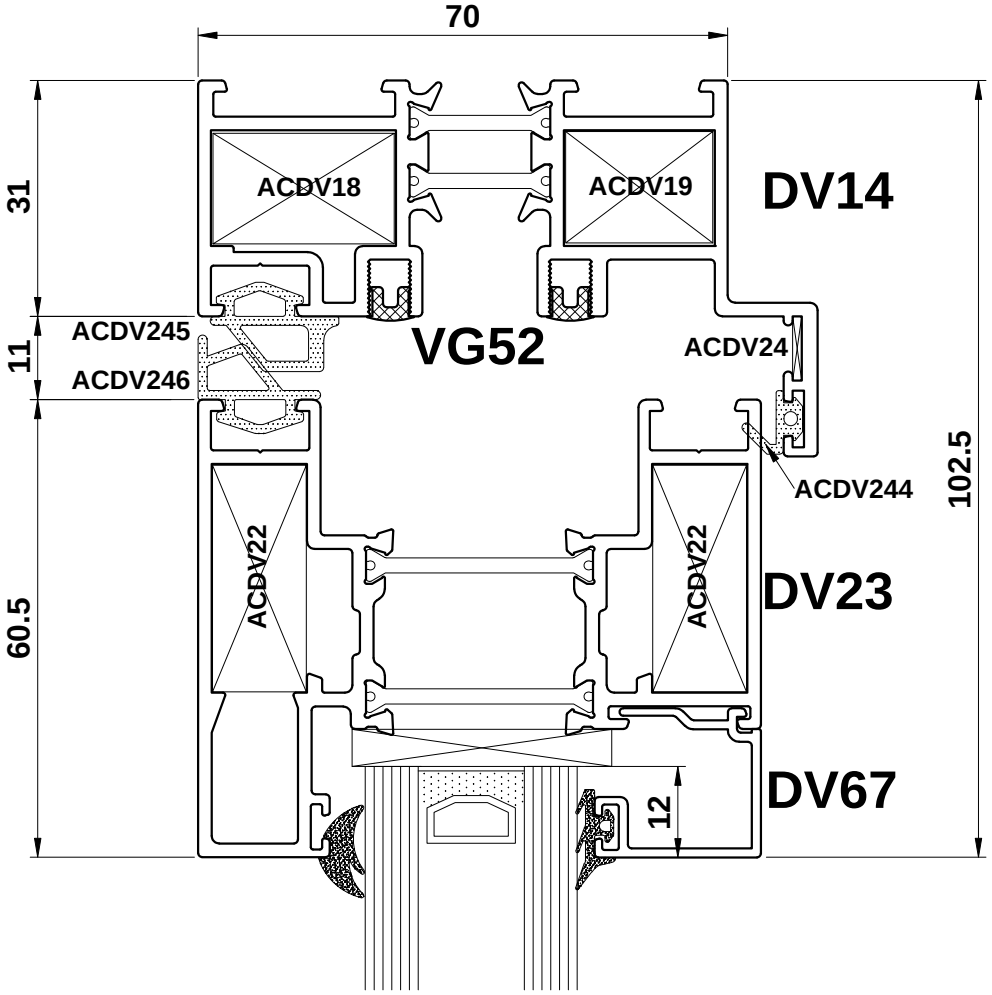

Do Not Scale From This Drawing

Open Out - Detail 7

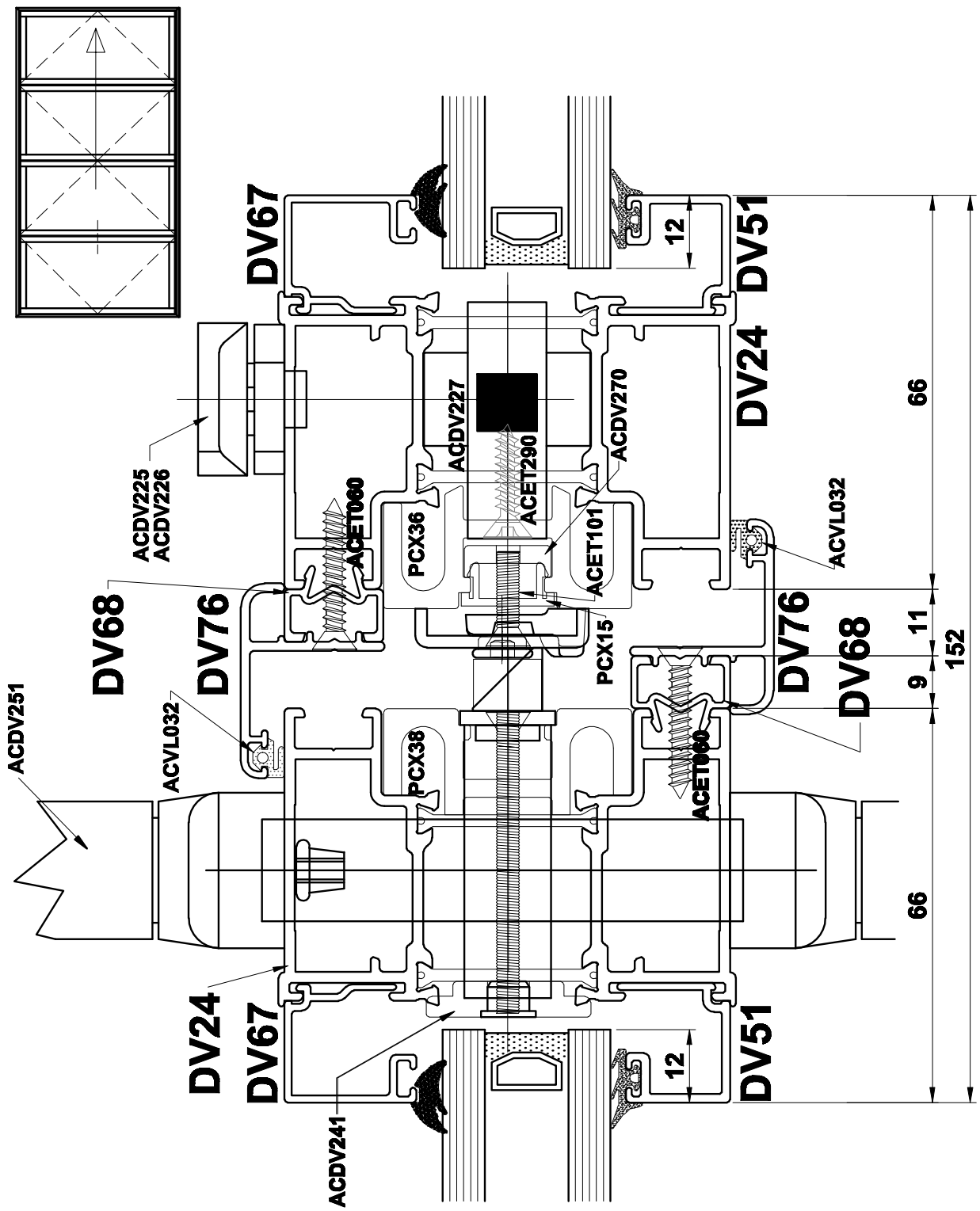

Do Not Scale From This Drawing

Open Out - Detail 8

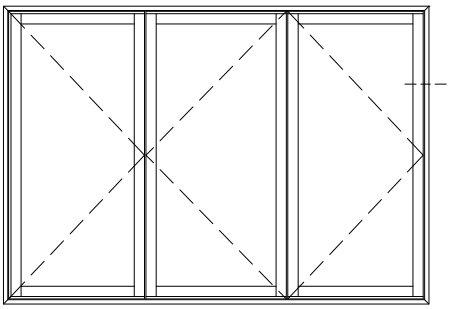

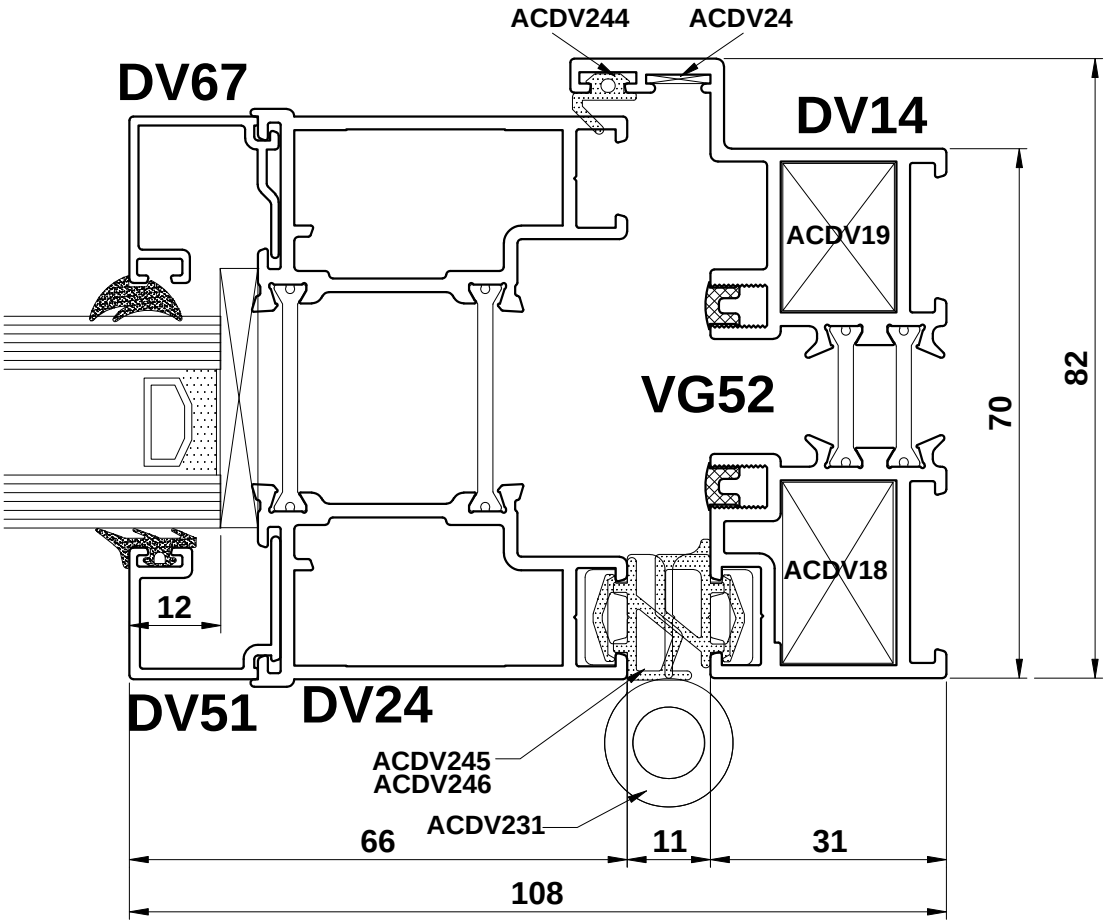

Do Not Scale From This Drawing

Open In

Type 2i

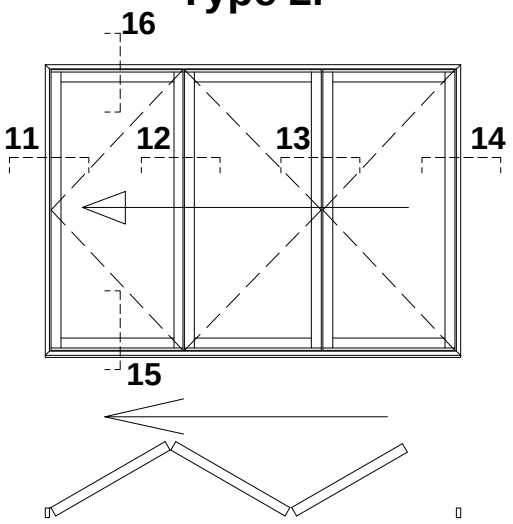

Type 4i

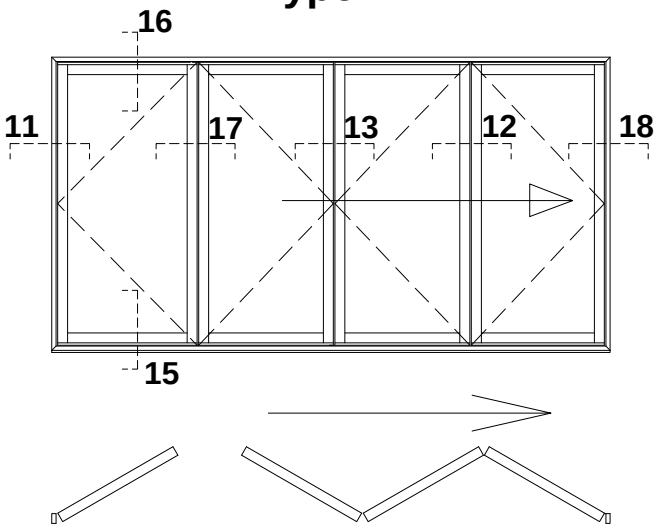

Do Not Scale From This Drawing

Open In

Type 6i

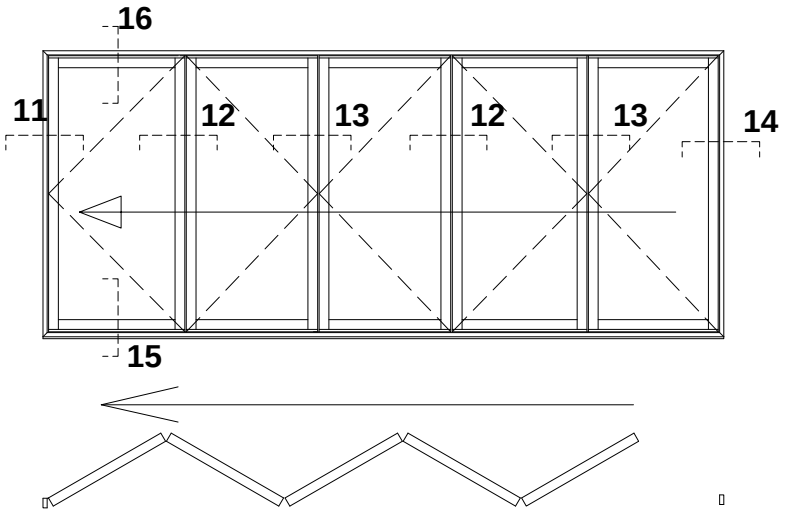

Type 7i

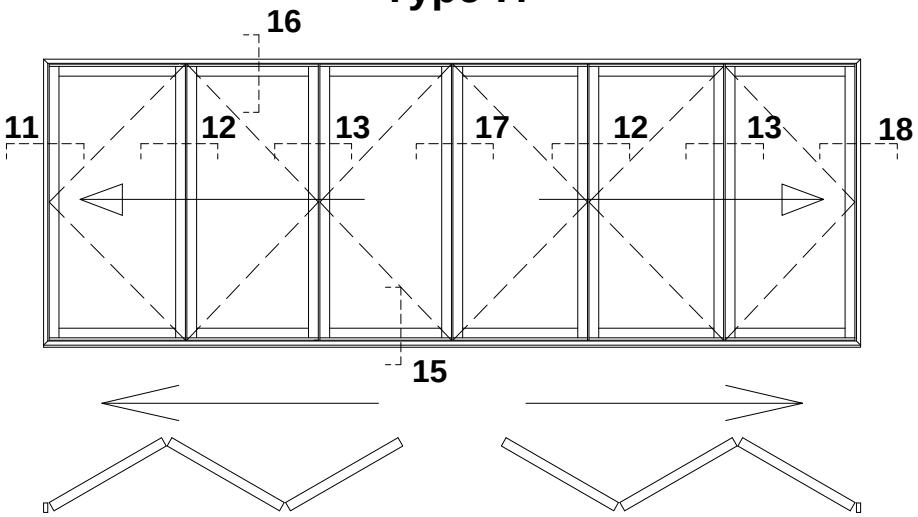

Do Not Scale From This Drawing

Visofold 3000

Open In

Single Door

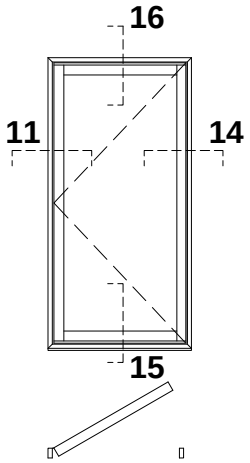

Double Door

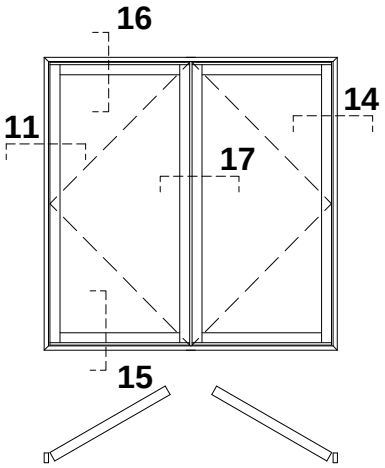

Do Not Scale From This Drawing

Open In - Detail 11

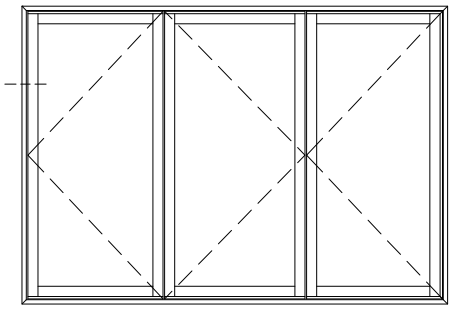

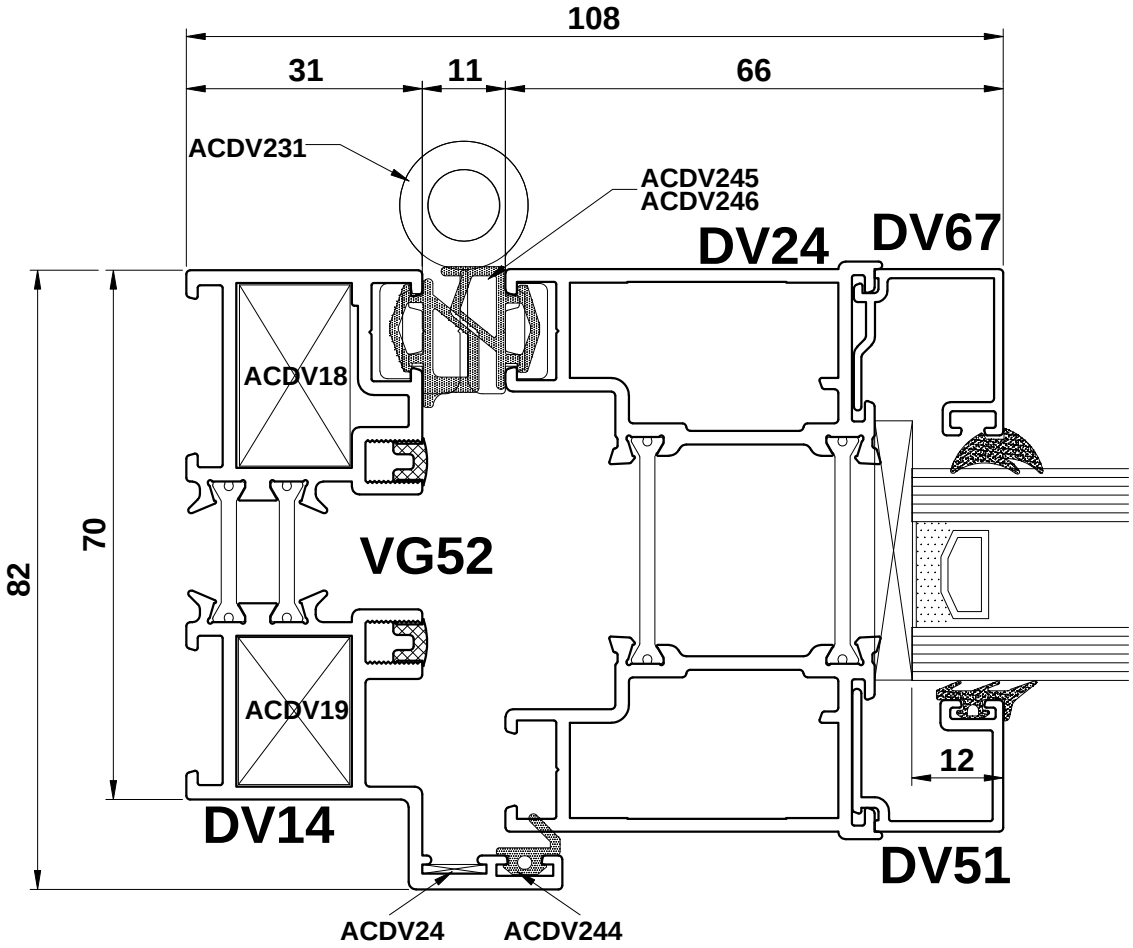

Do Not Scale From This Drawing

Open In - Detail 12

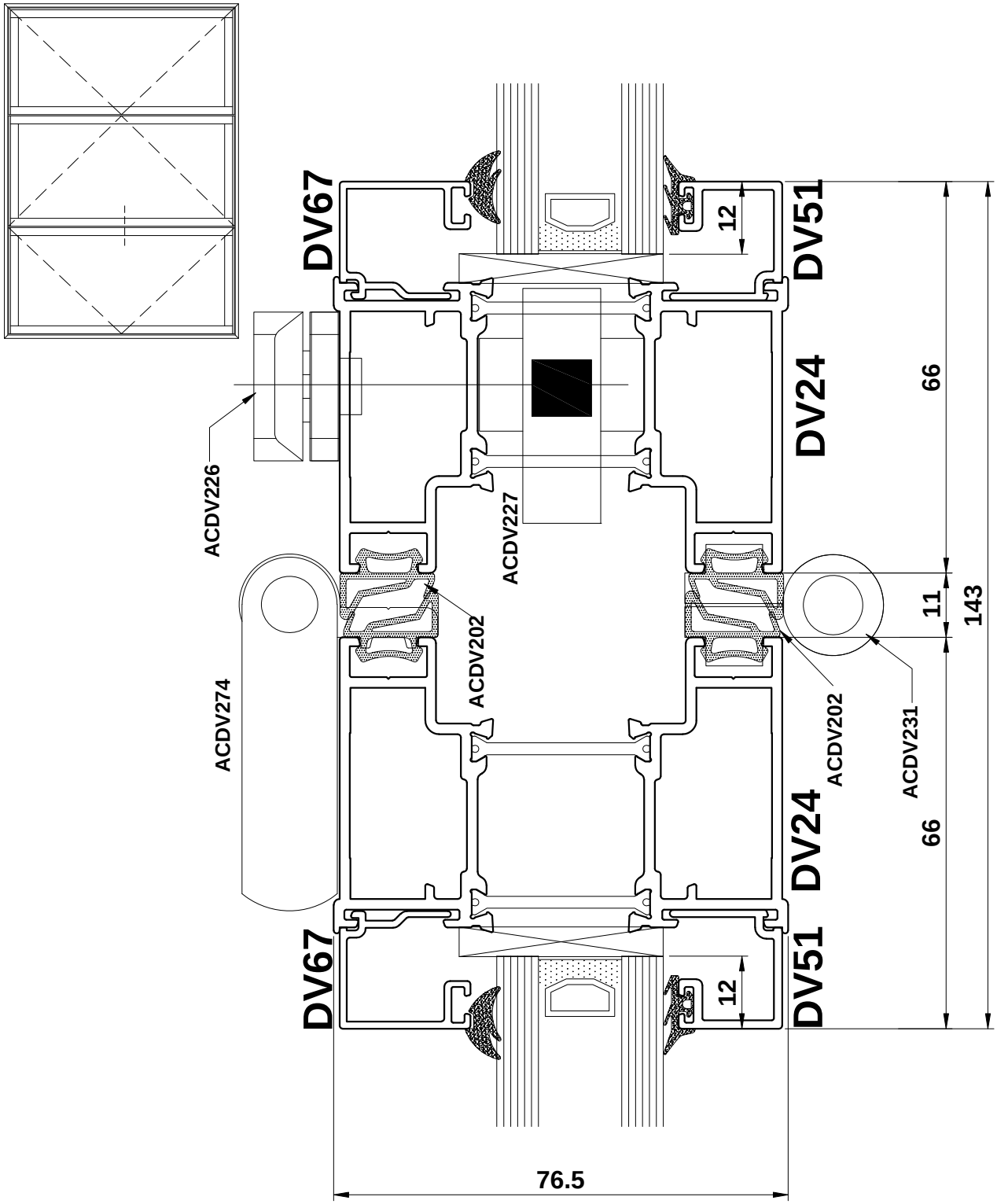

Do Not Scale From This Drawing

Open In - Detail 13

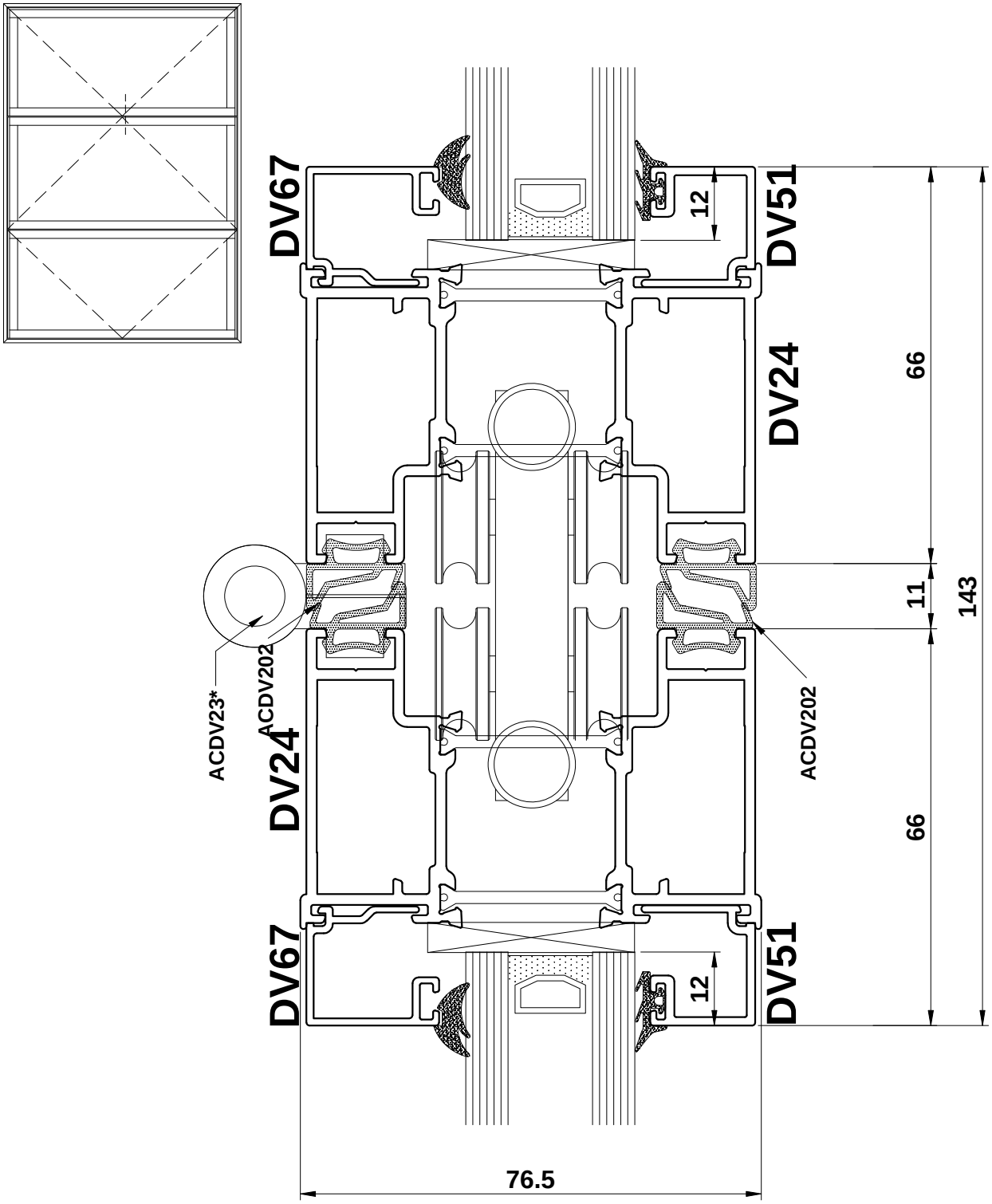

Do Not Scale From This Drawing

Open In - Detail 14

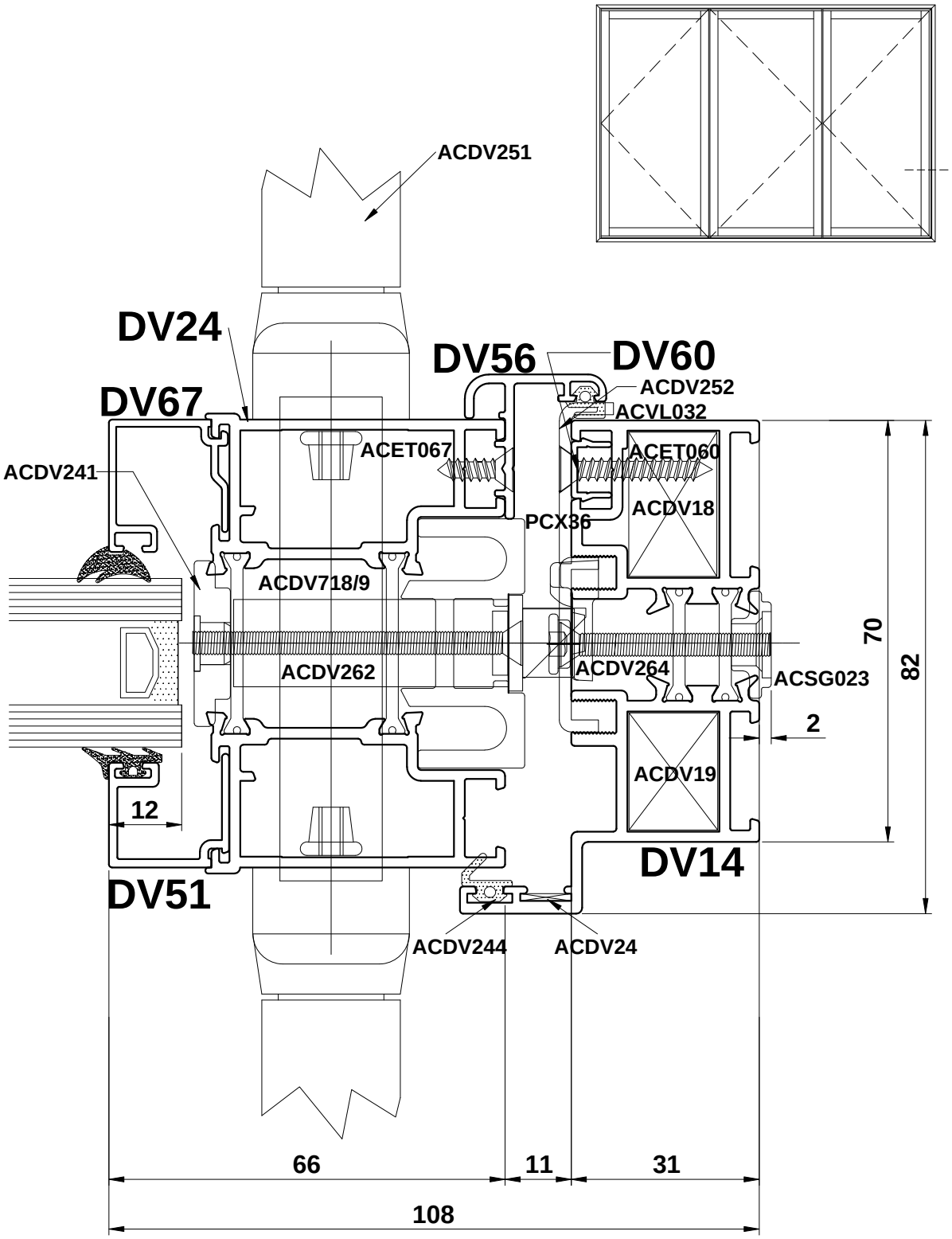

Do Not Scale From This Drawing

Open In - Detail 15A

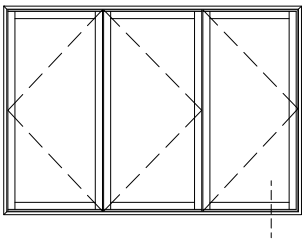

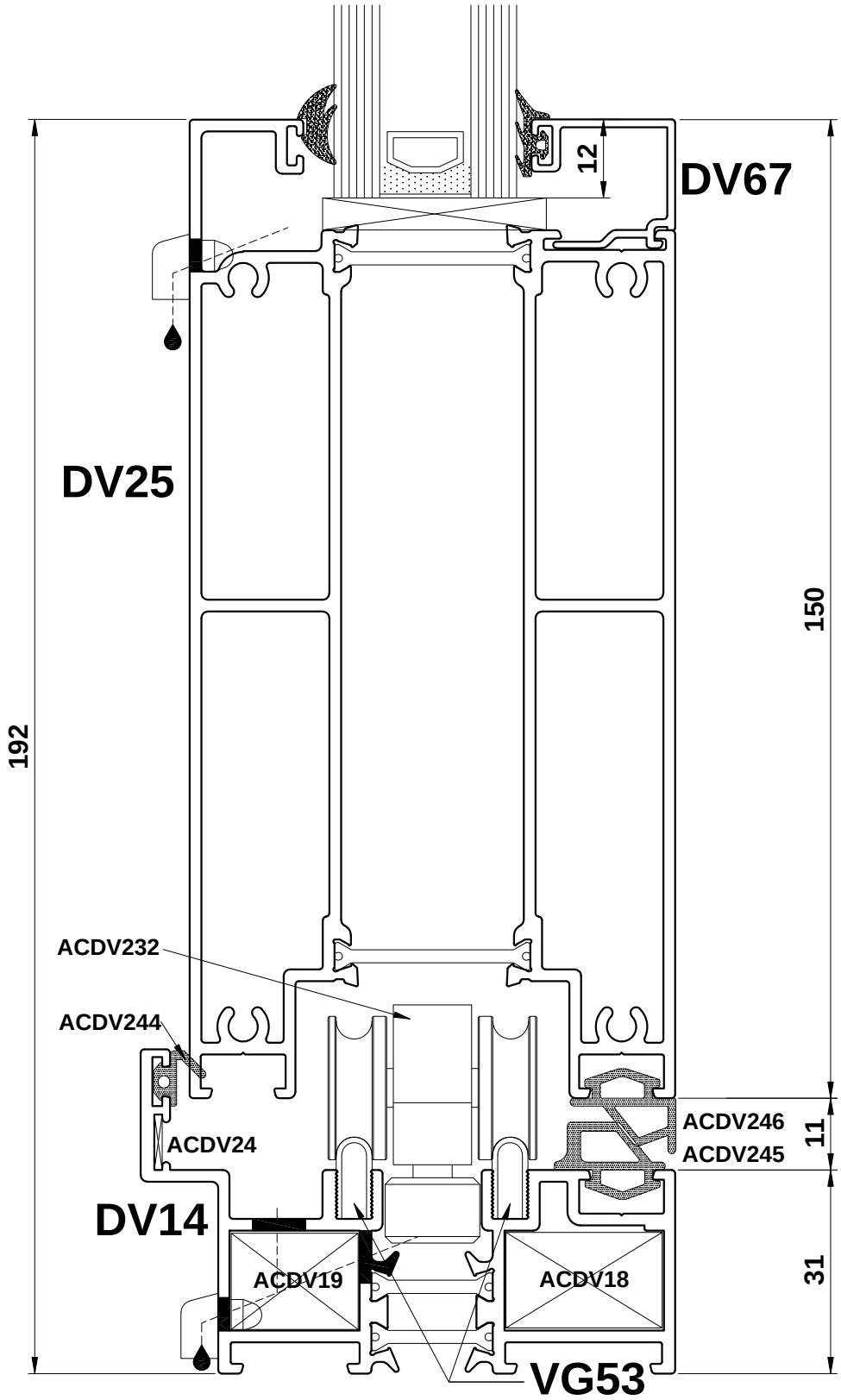

Do Not Scale From This Drawing

Open In - Detail 15B

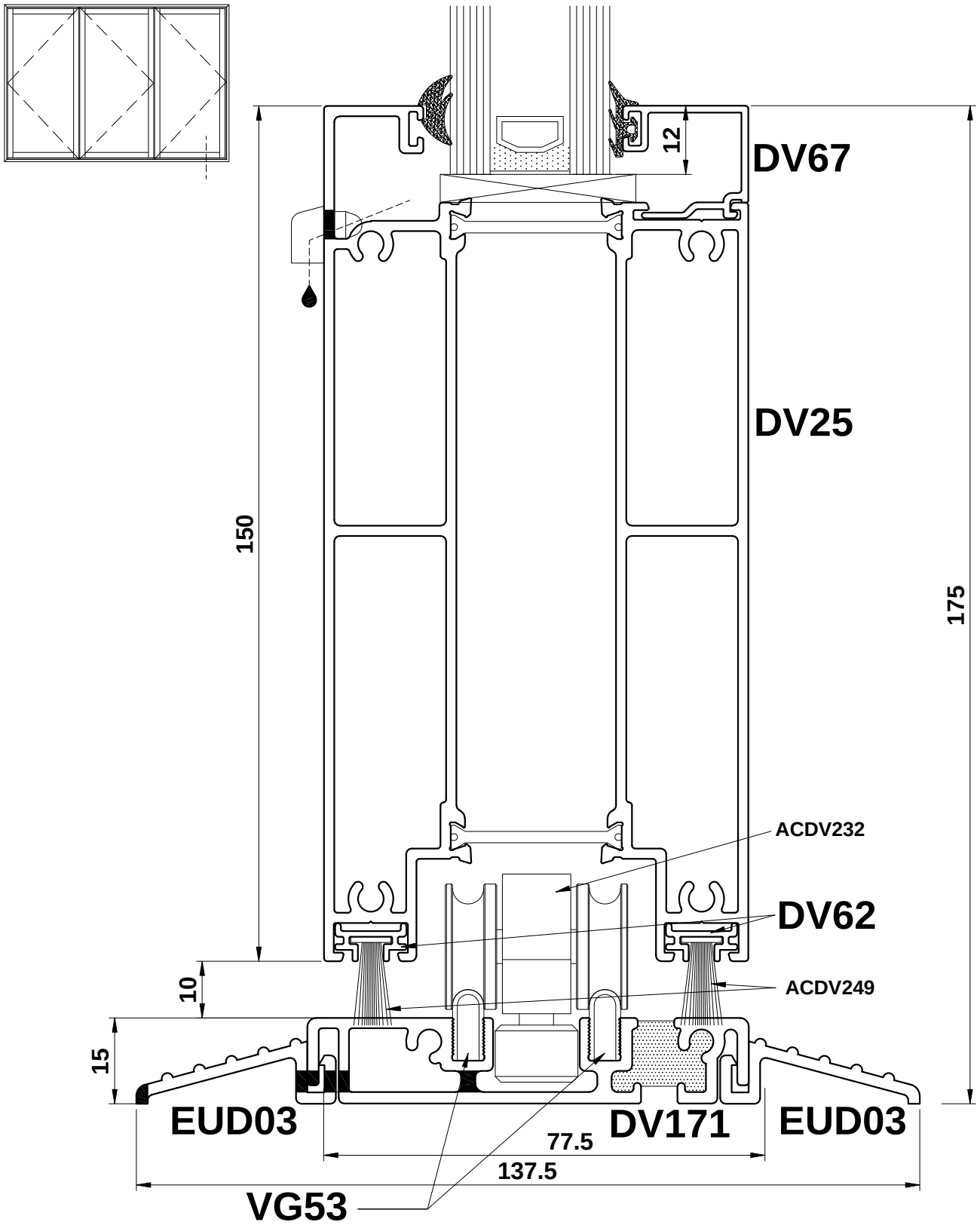

Do Not Scale From This Drawing

Open In - Detail 15C

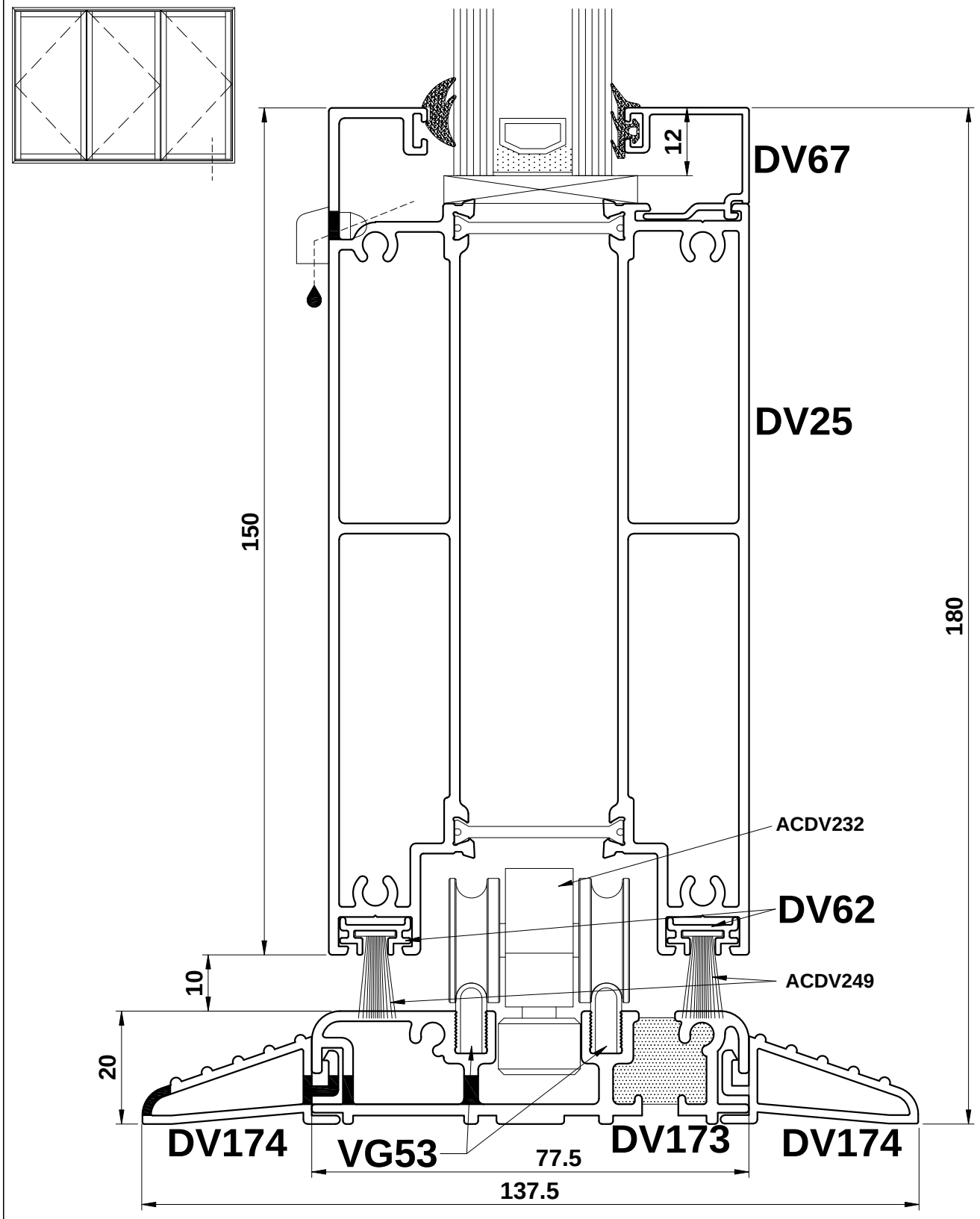

Do Not Scale From This Drawing

Open In - Detail 15D

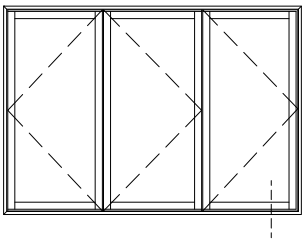

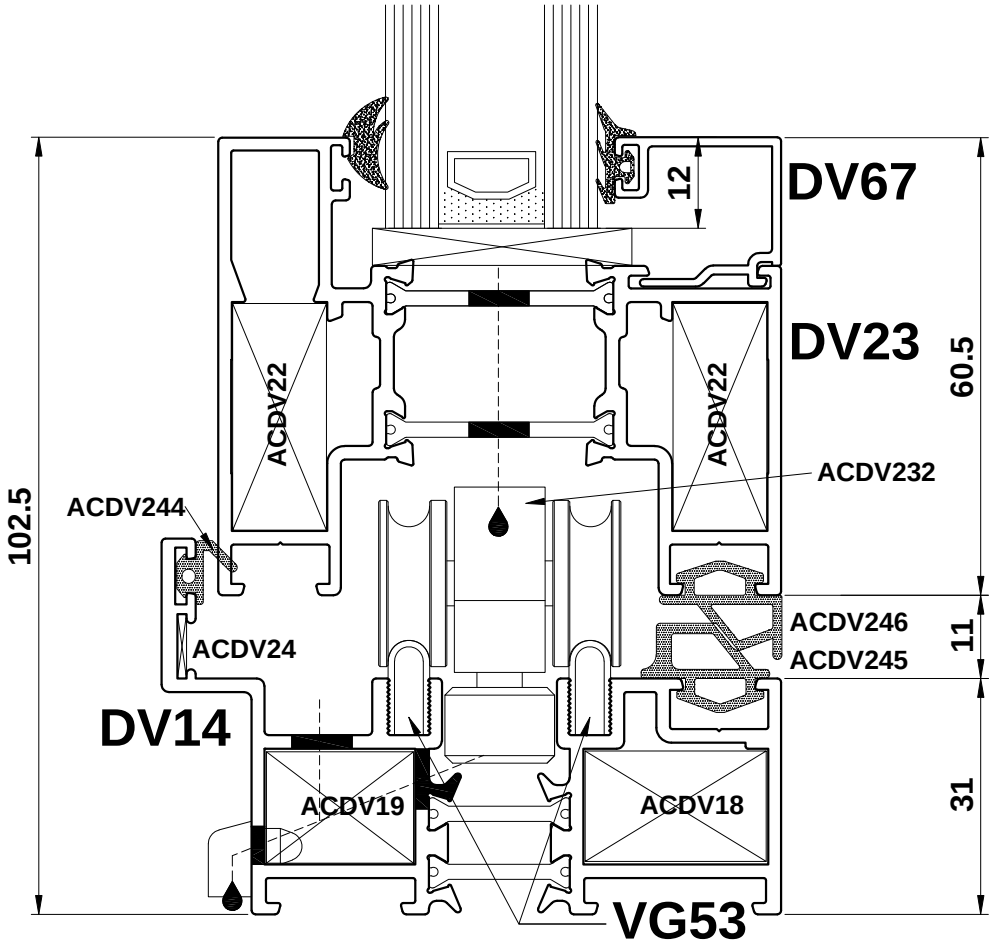

Do Not Scale From This Drawing

Open In - Detail 15E

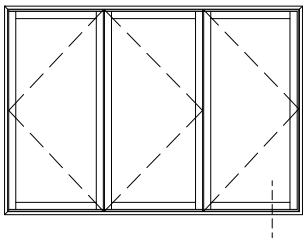

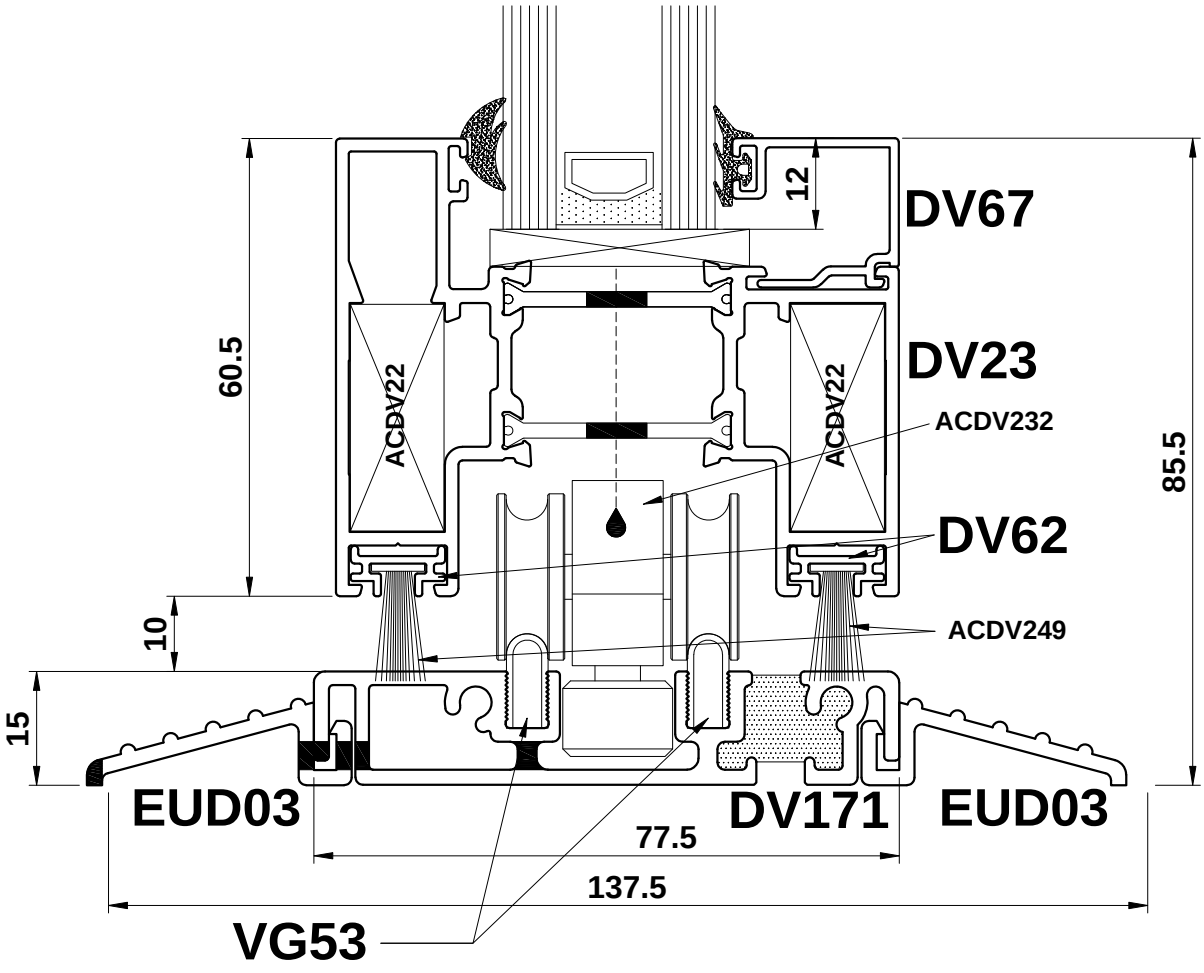

Do Not Scale From This Drawing

Open In - Detail 15F

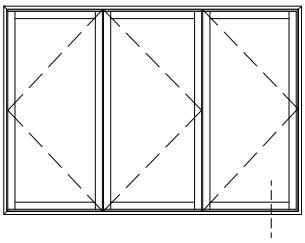

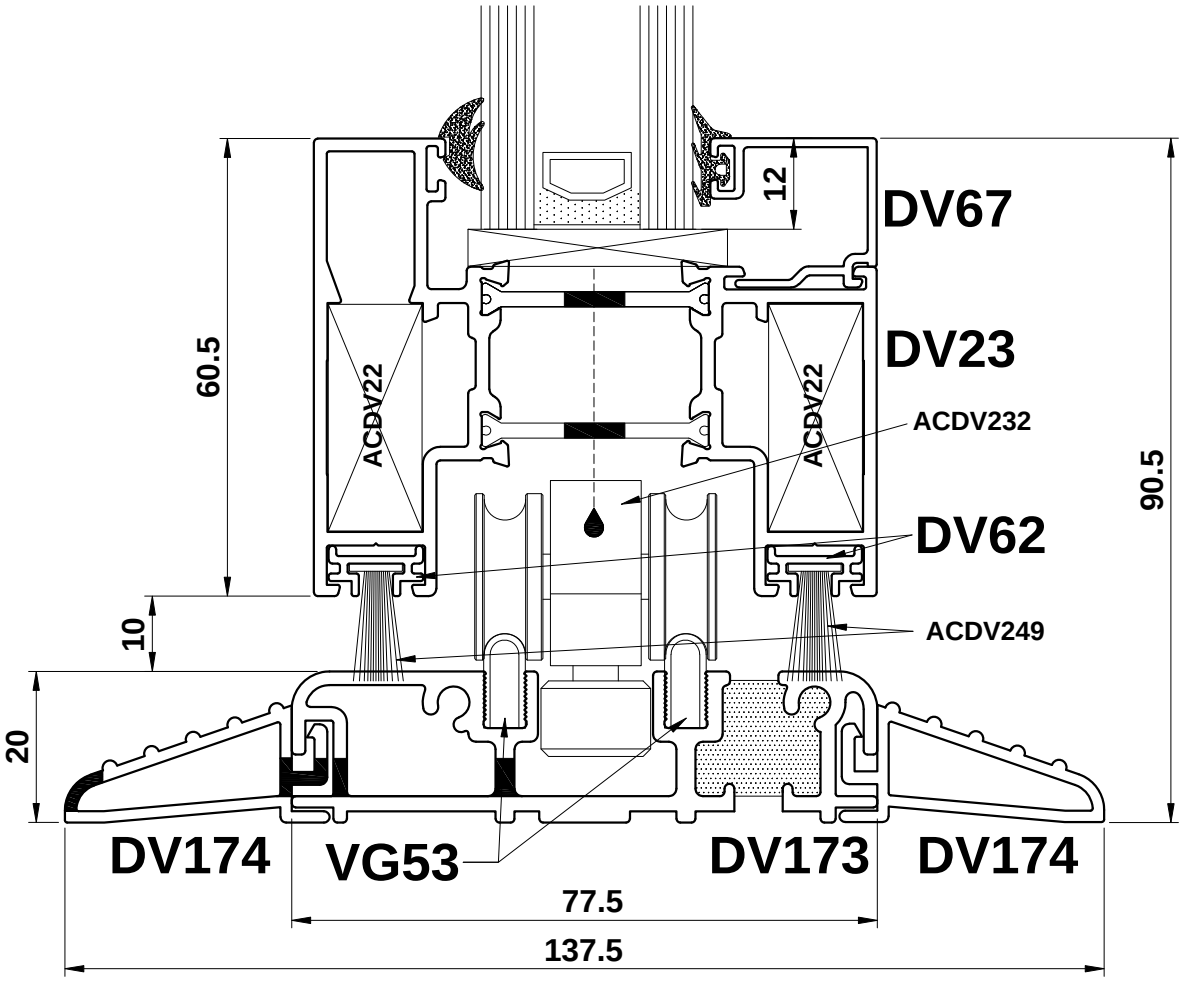

Do Not Scale From This Drawing

Open In - Detail 16

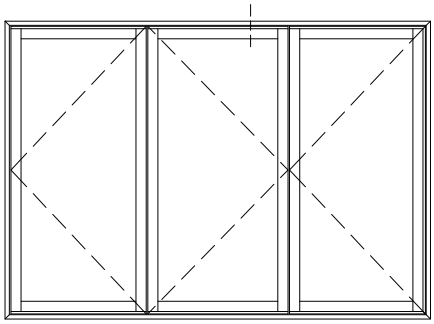

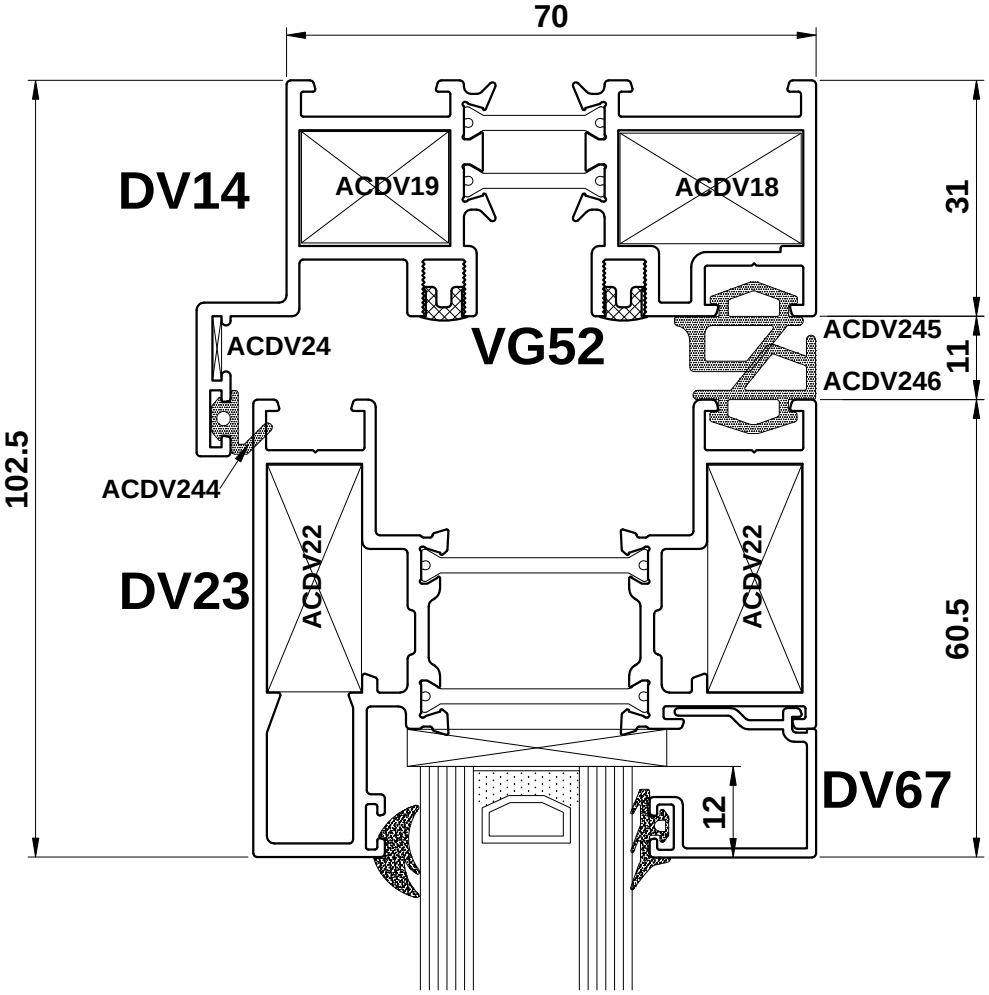

Do Not Scale From This Drawing

Open In - Detail 17

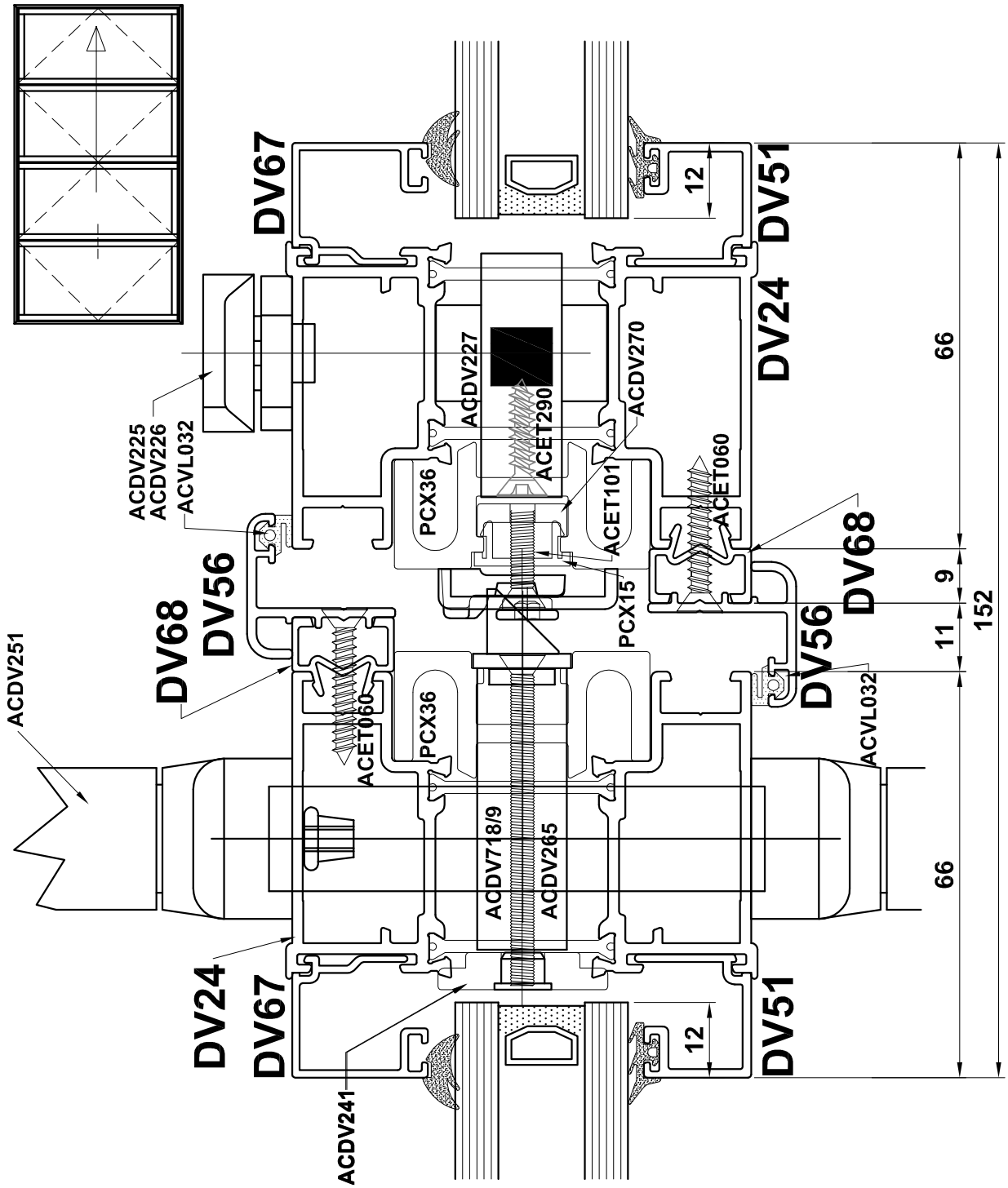

Do Not Scale From This Drawing

Open In - Detail 18

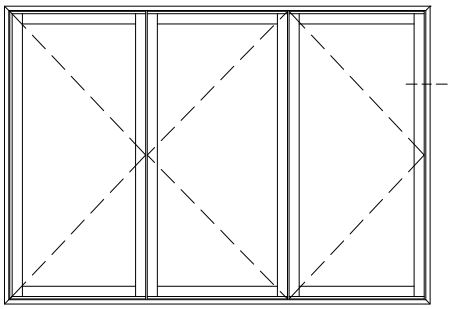

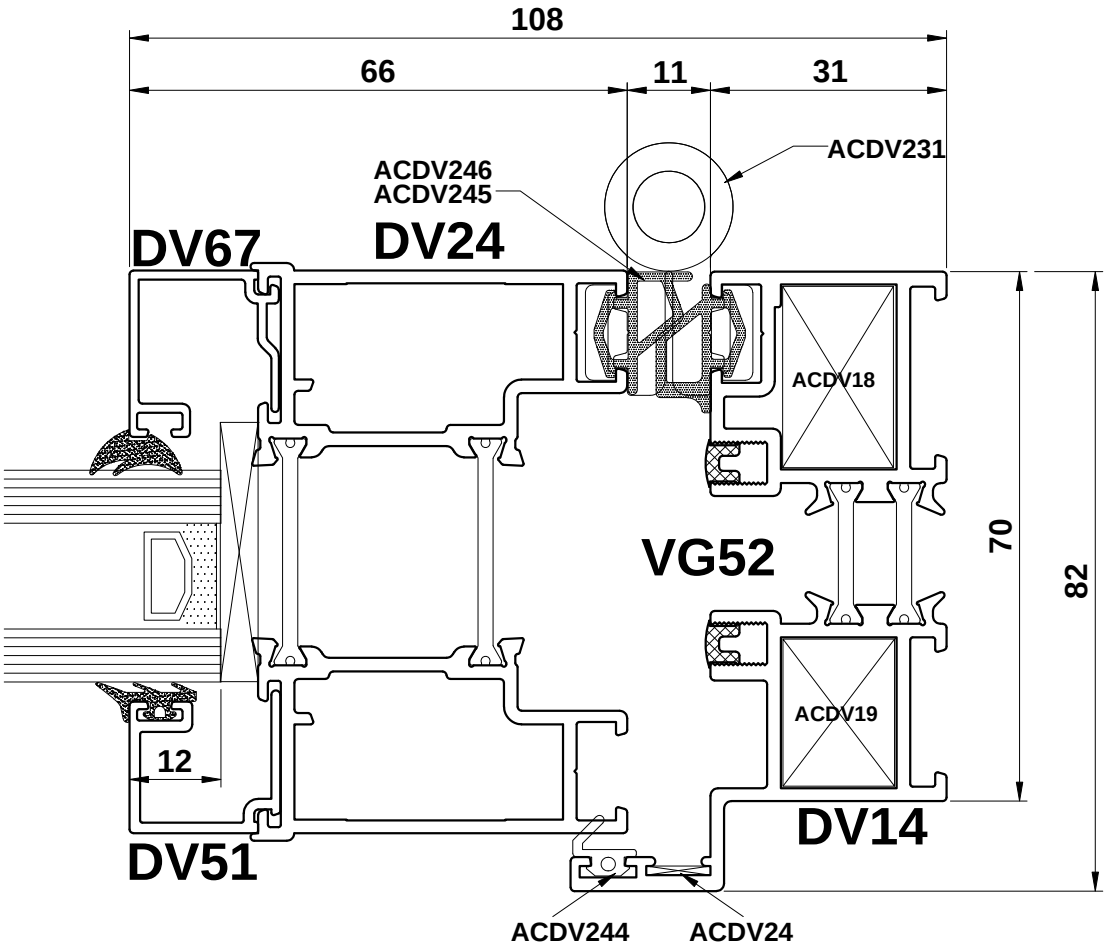

Do Not Scale From This Drawing

Visofold 2000

Do Not Scale From This Drawing

Section D

Doors-Open In & Out

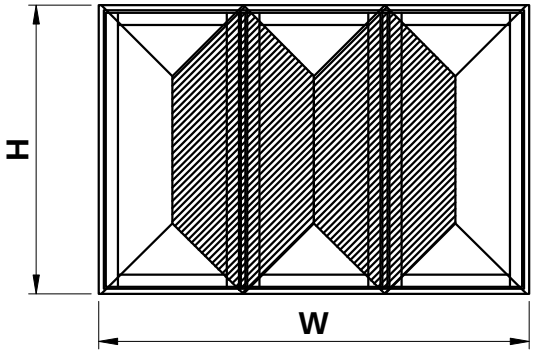

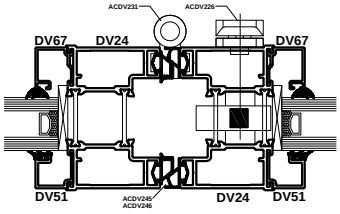

ixx = 82cm^4
fmax = B/200 < 15mm
max sash weight = 80kg
max sash width = 1000mm
max sash height = 2500mm

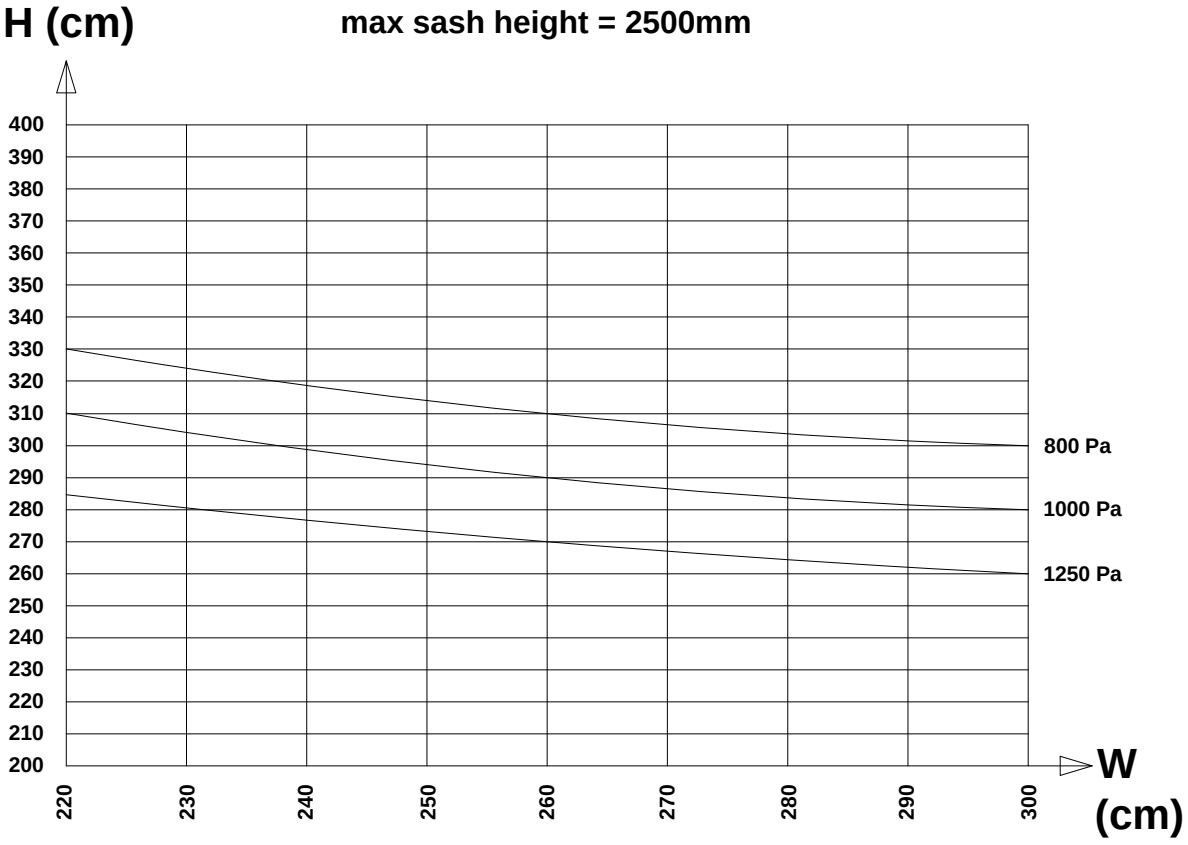

Do Not Scale From This Drawing

Doors-Open In & Out

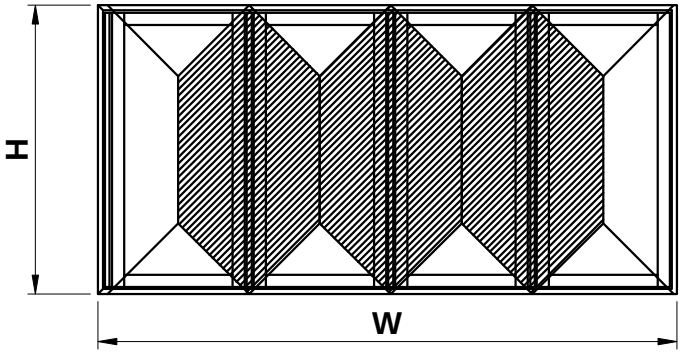

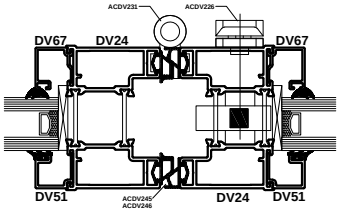

ixx = 82cm^4
fmax = B/200 < 15mm
max sash weight = 80kg
max sash width = 1000mm
max sash height = 2500mm

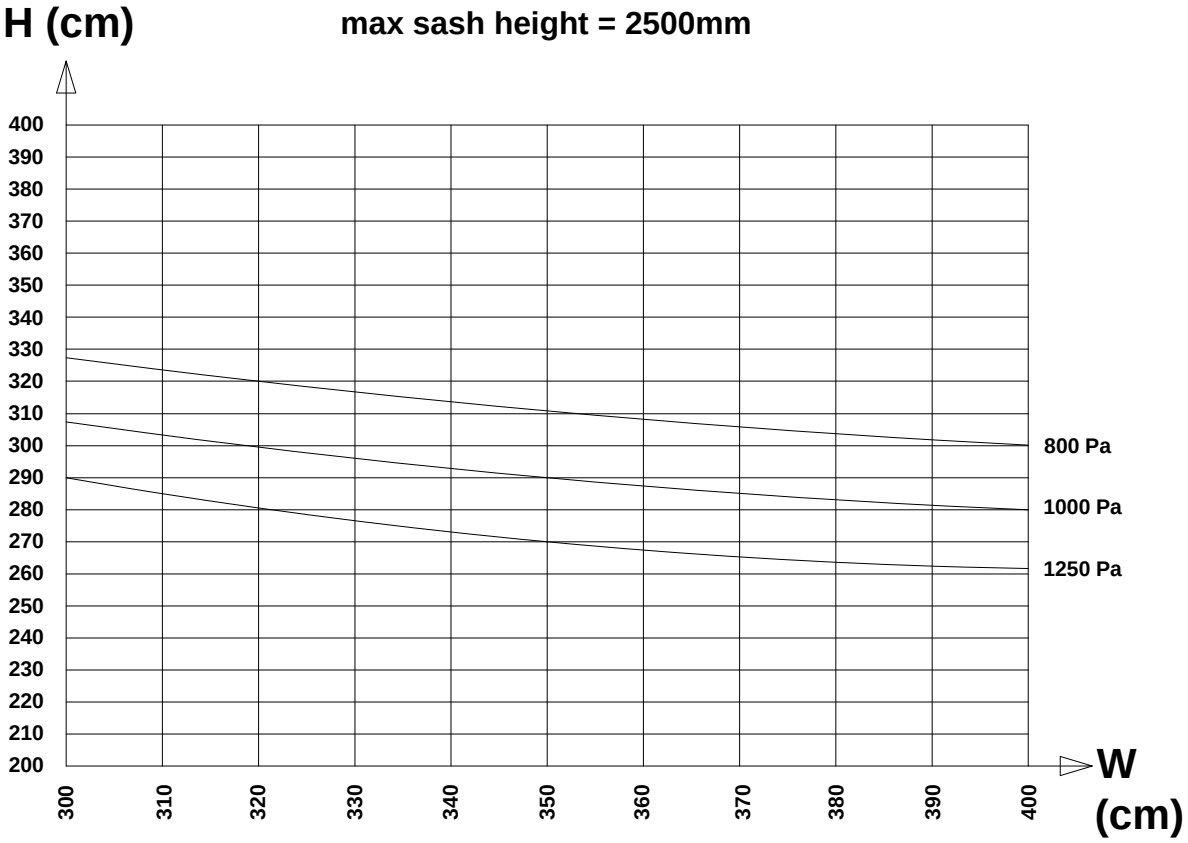

Do Not Scale From This Drawing

Doors-Open In & Out

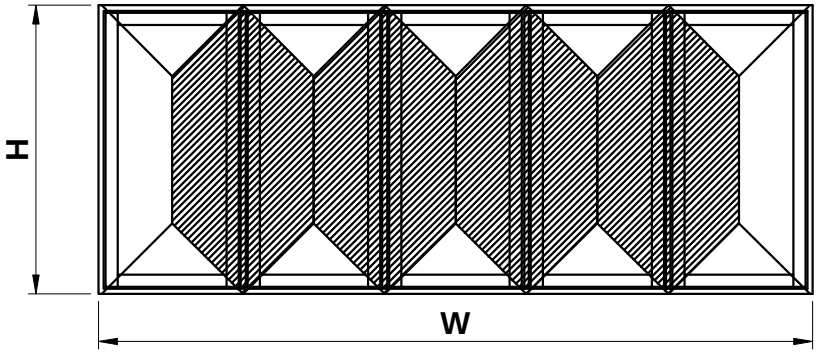

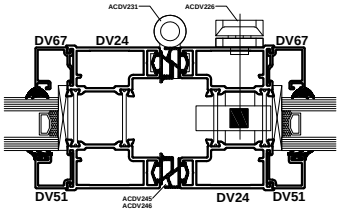

ixx = 82cm^4
fmax = B/200 < 15mm
max sash weight = 80kg
max sash width = 1000mm
max sash height = 2500mm

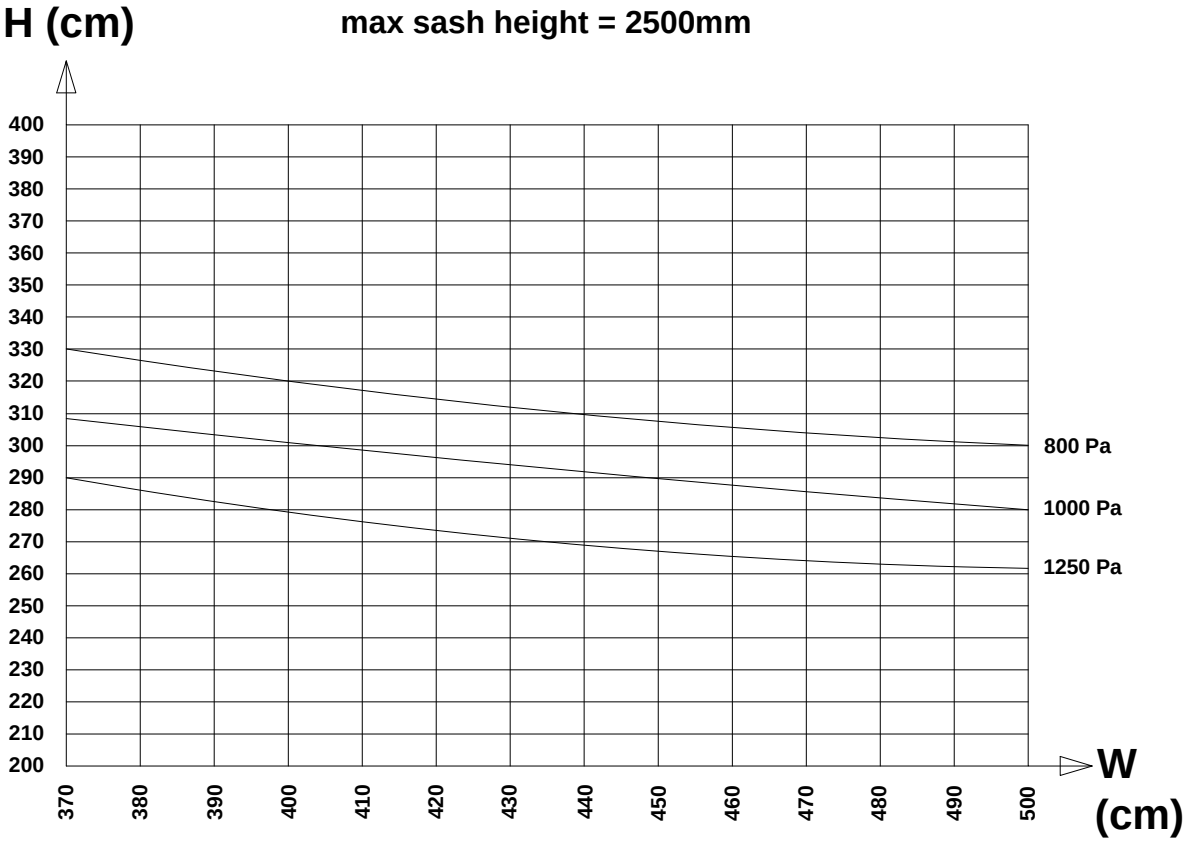

Do Not Scale From This Drawing

Doors-Open In & Out

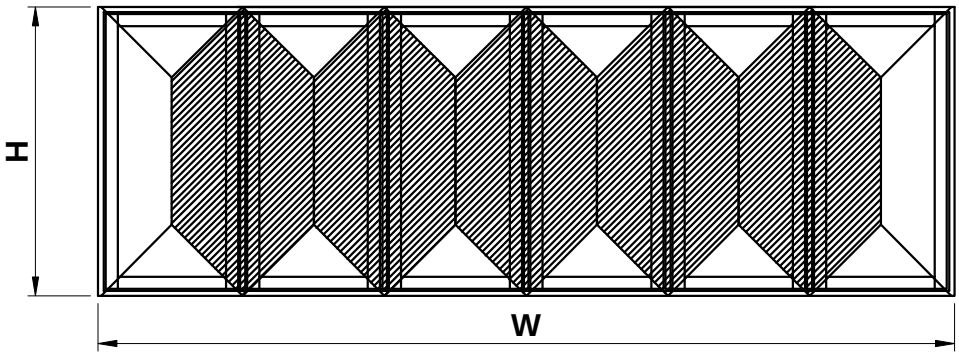

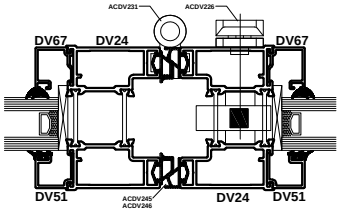

ixx = 82cm^4
fmax = B/200 < 15mm
max sash weight = 80kg
max sash width = 1000mm
max sash height = 2500mm

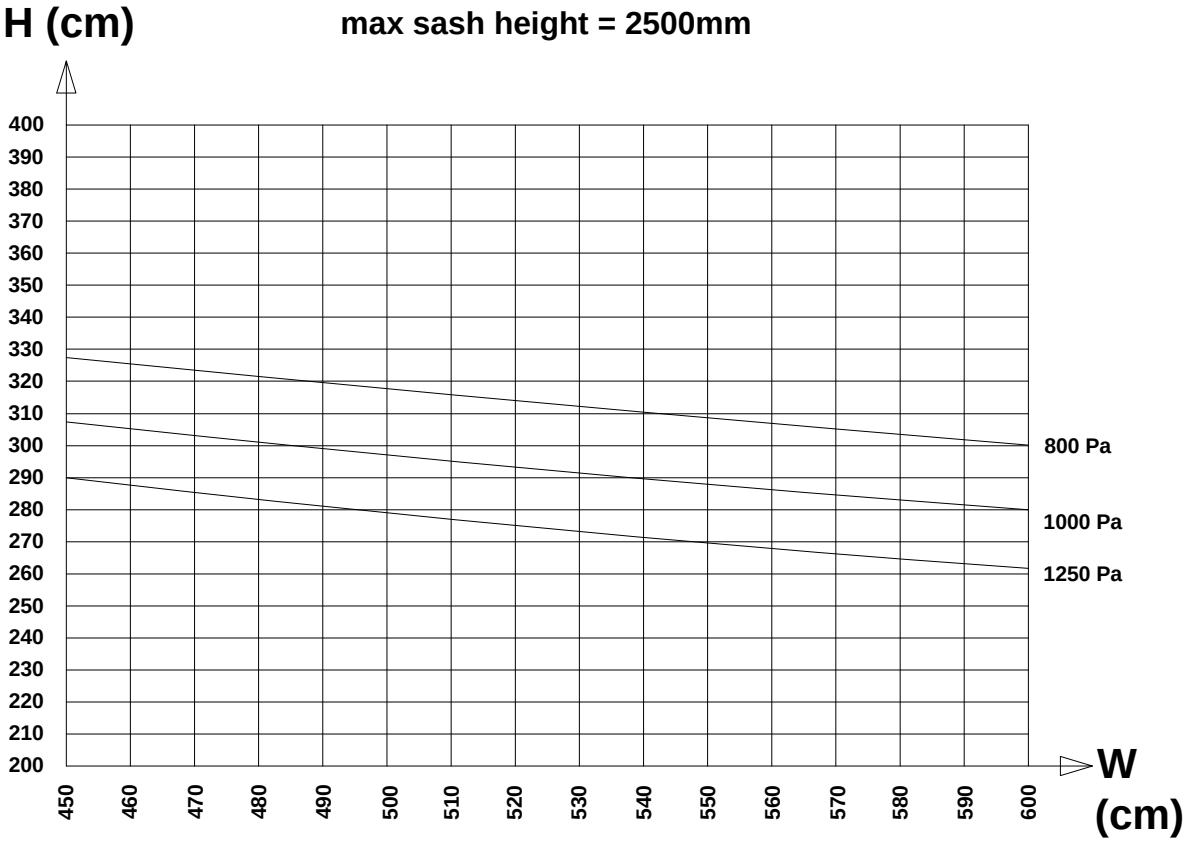

Do Not Scale From This Drawing

Section E

Page E02-E23 - Open Out
Page E24-E44 - Open In

Section E

Visofold 2000
Open Out
Construction Drawings

Index

E DV **Construction Drawings**

IF IN DOUBT ASK!

Open Out - Door Profiles

Profiles	Tooling / Components
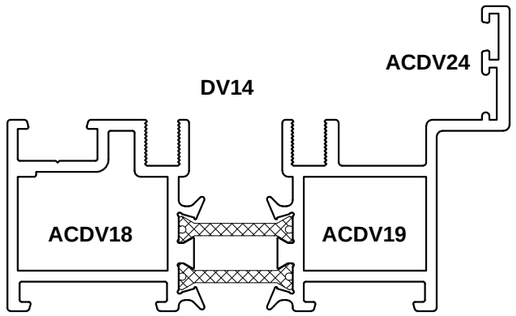	Corner Chevron - ACDV24 Mechanical cleat - ACDV18 Mechanical cleat - ACDV19 Tooling - ACDV900
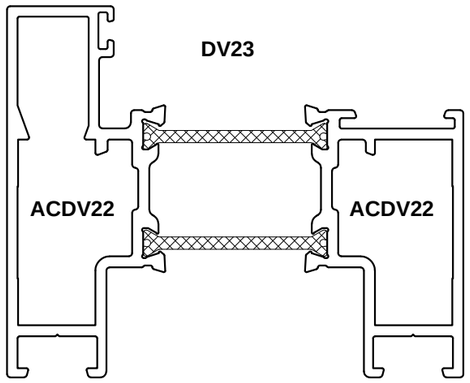	Mechanical cleat - ACDV22
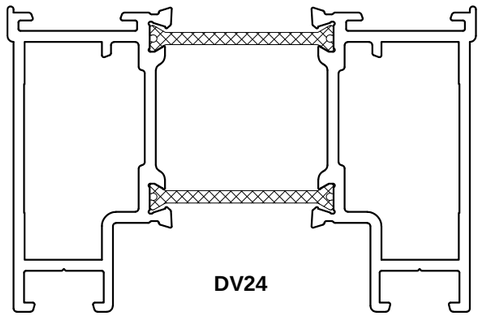	

Profiles	Tooling / Components
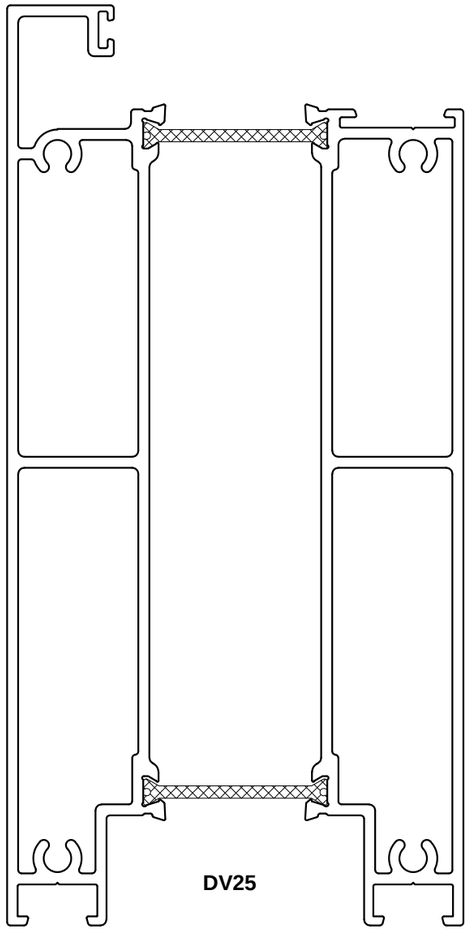	
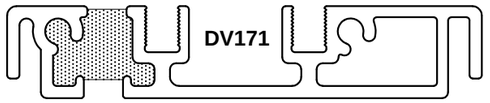	
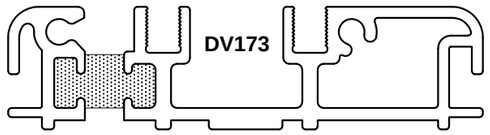	

Do Not Scale From This Drawing

Open Out - DV14 Corner Cleat Preparation

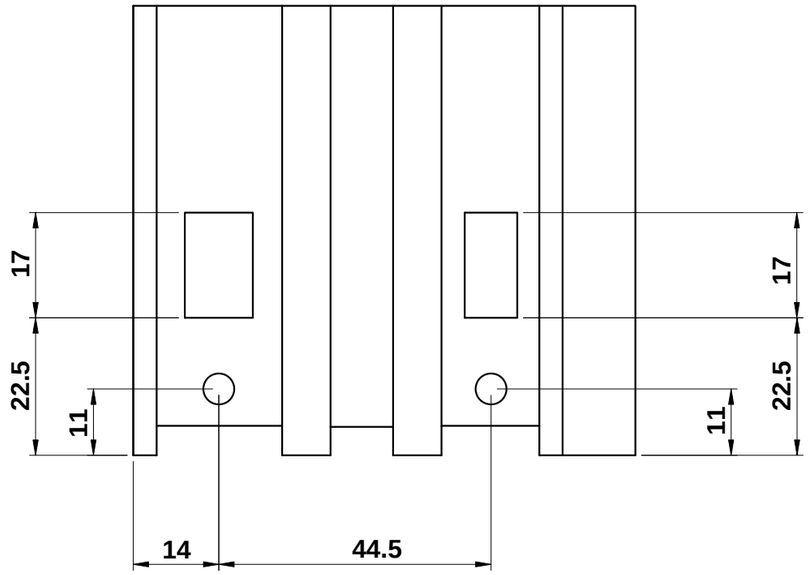

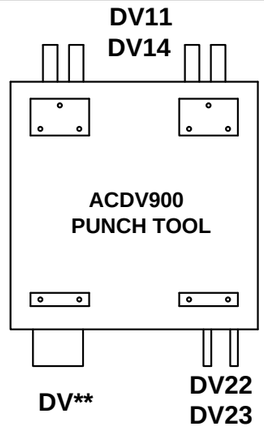

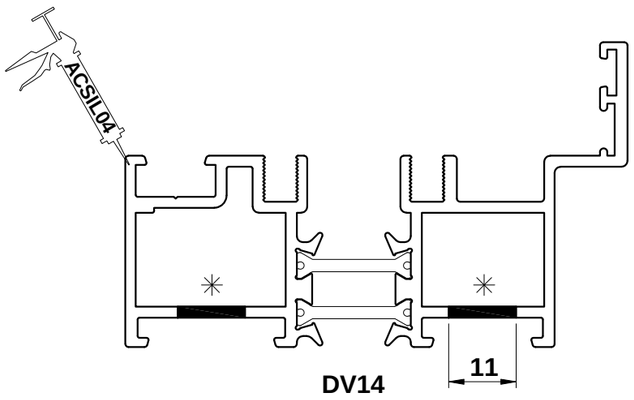

CORNER CLEAT-ACDV18
CORNER CLEAT-ACDV19

APPLY SILICONE (ACSIL04) TO EDGE OF PROFILE.

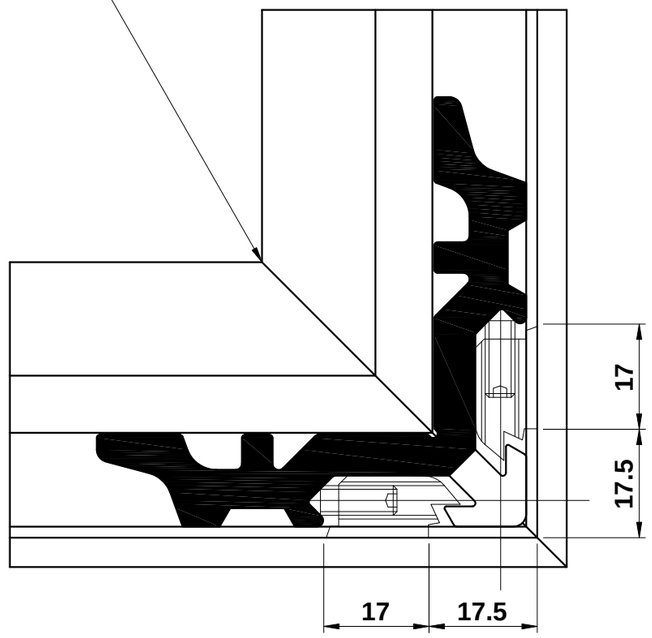

APPLY GLUE (ACSIL013) TO CLEAT APERTURE MARKED ✳

Do Not Scale From This Drawing

Open Out - Square Join

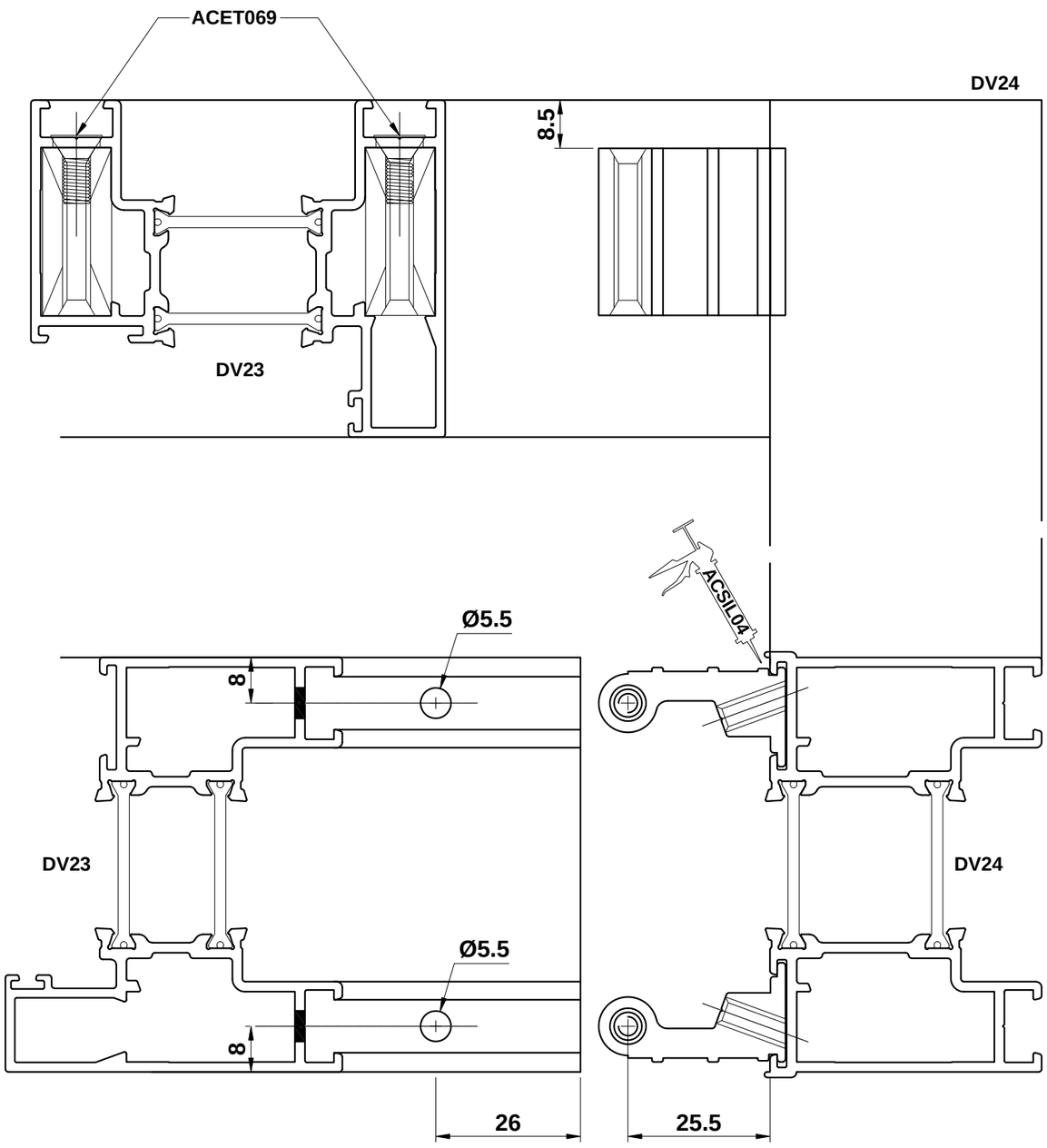

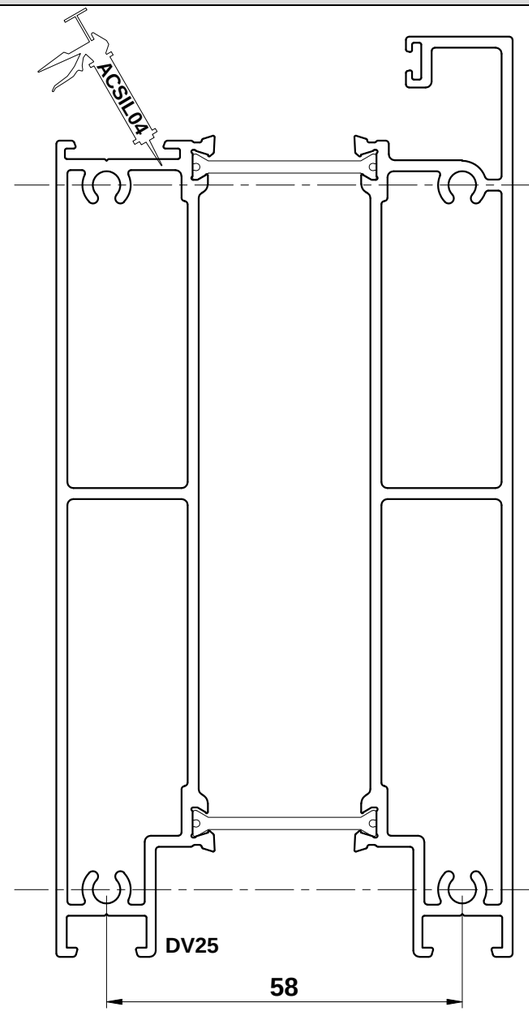

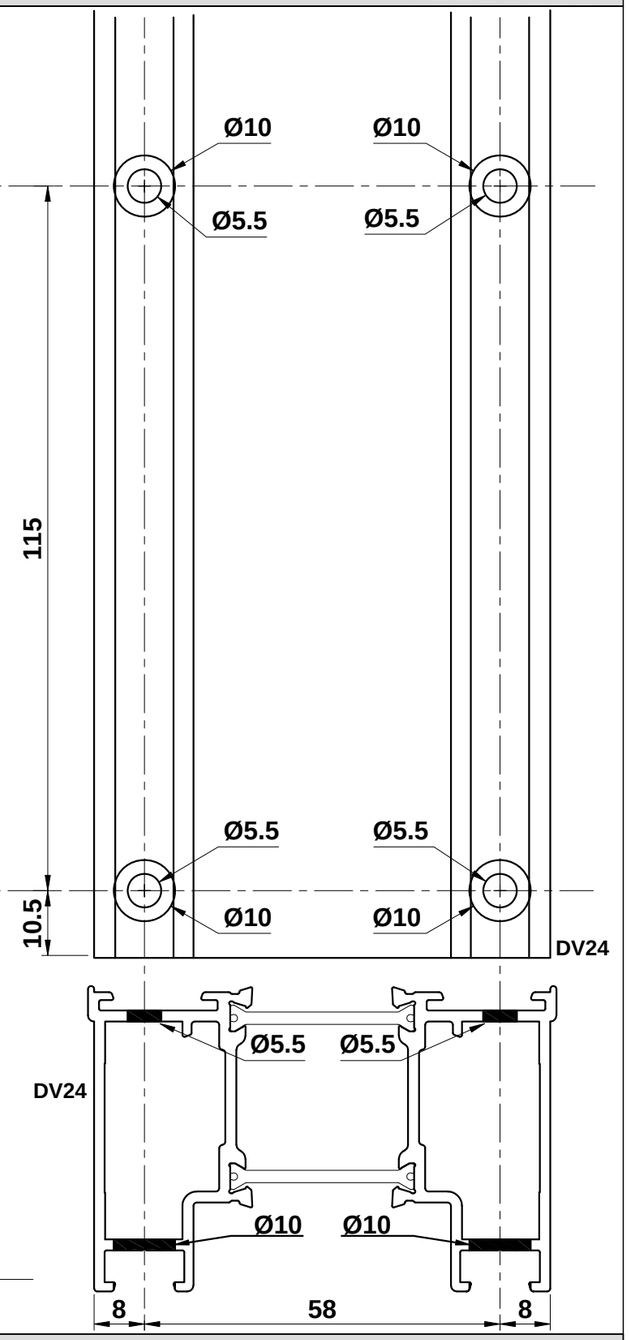

IMPORTANT NOTE

If using ACDV261 with a low threshold, the above prep should be 6mm lower on the DV24 to ensure flush finish.

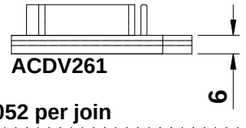

4 x ACDR052 per join

Do Not Scale From This Drawing

Open Out - DV171 Low Threshold

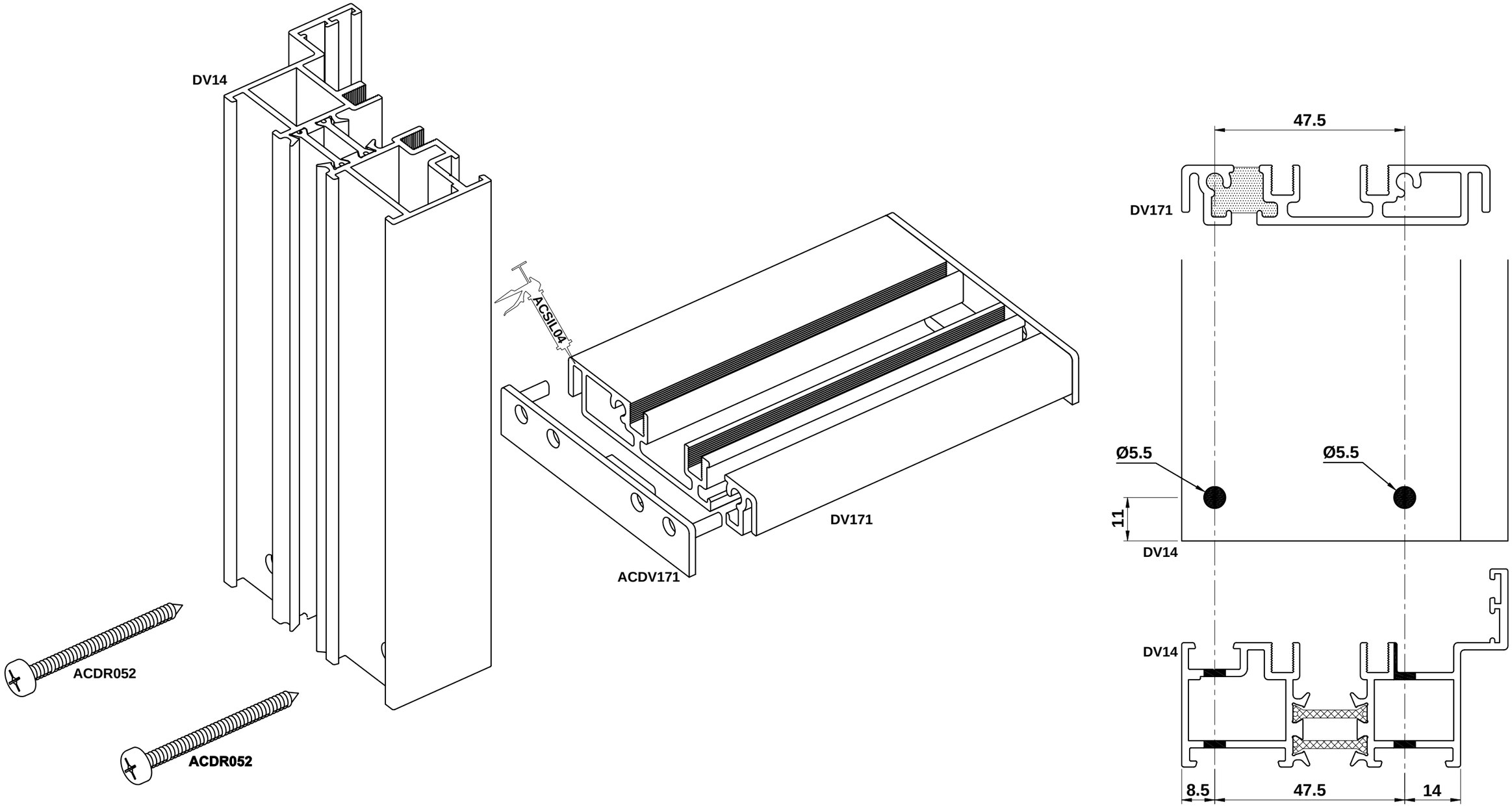

Do Not Scale From This Drawing

Open Out - DV173 Low Threshold

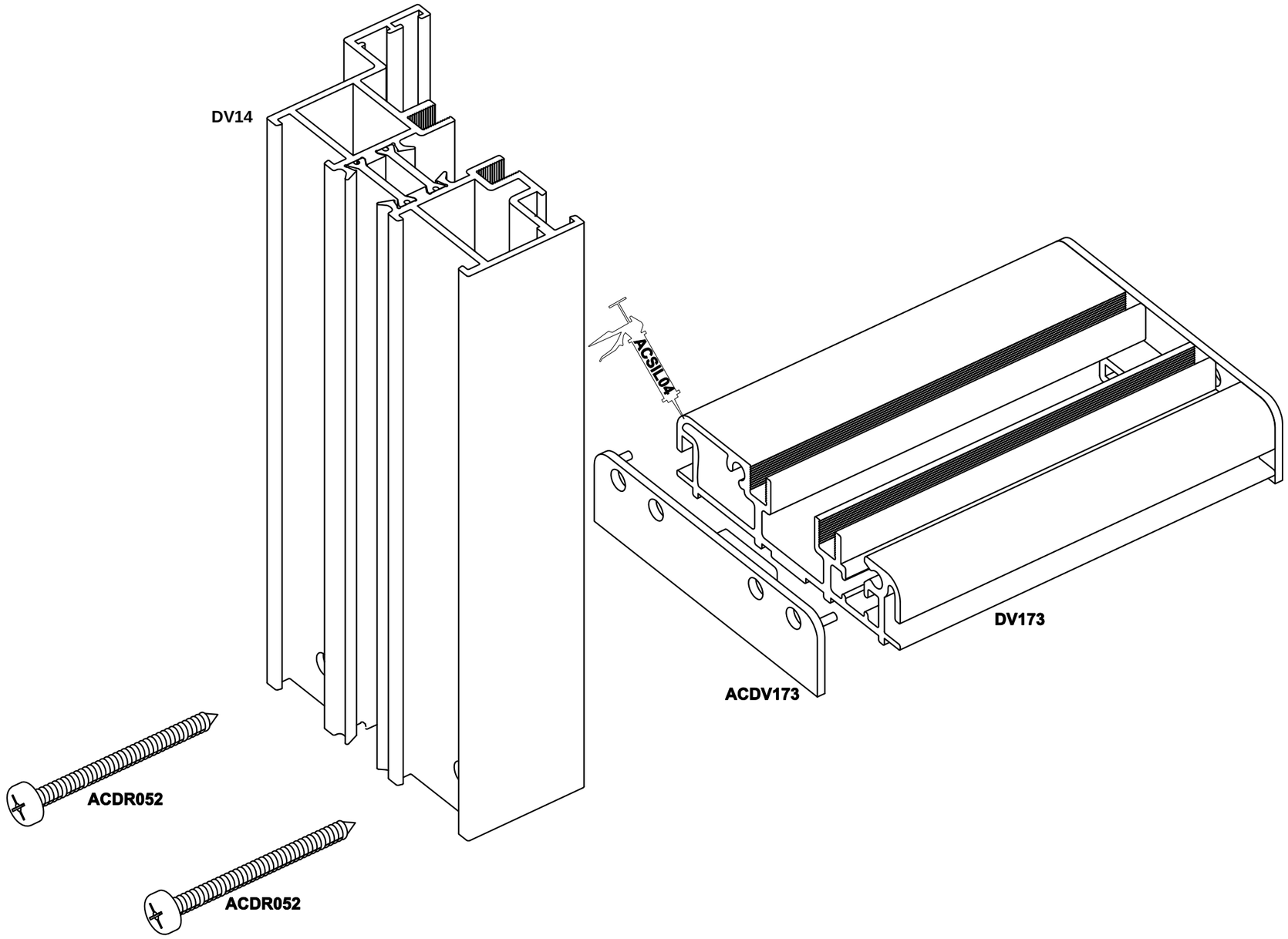

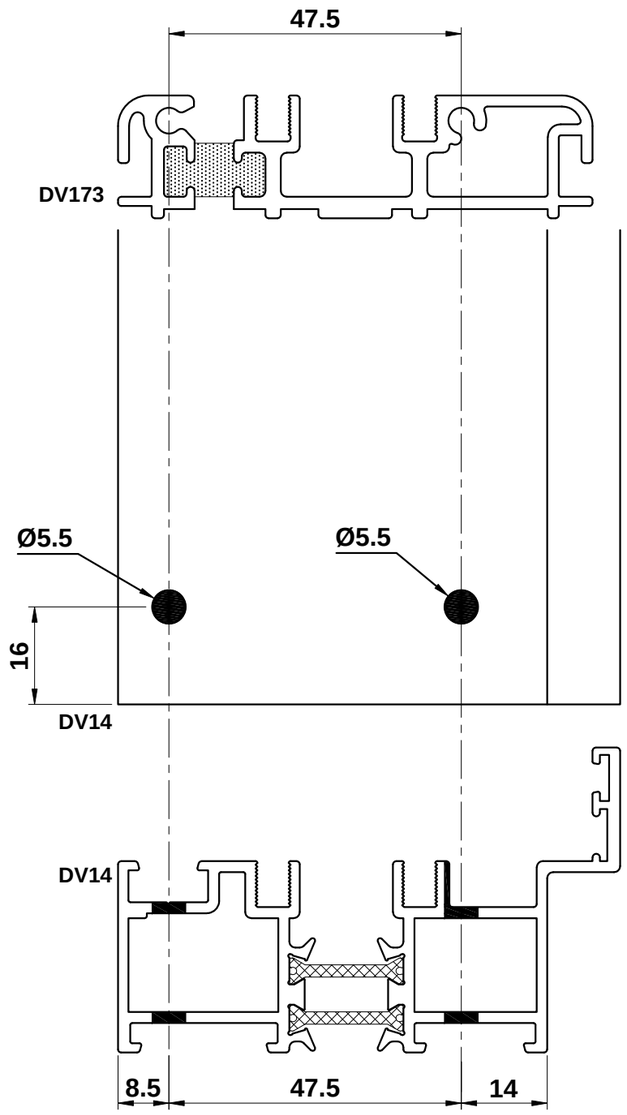

Do Not Scale From This Drawing

DV14, DV171, DV173 & DV25 Drainage Details

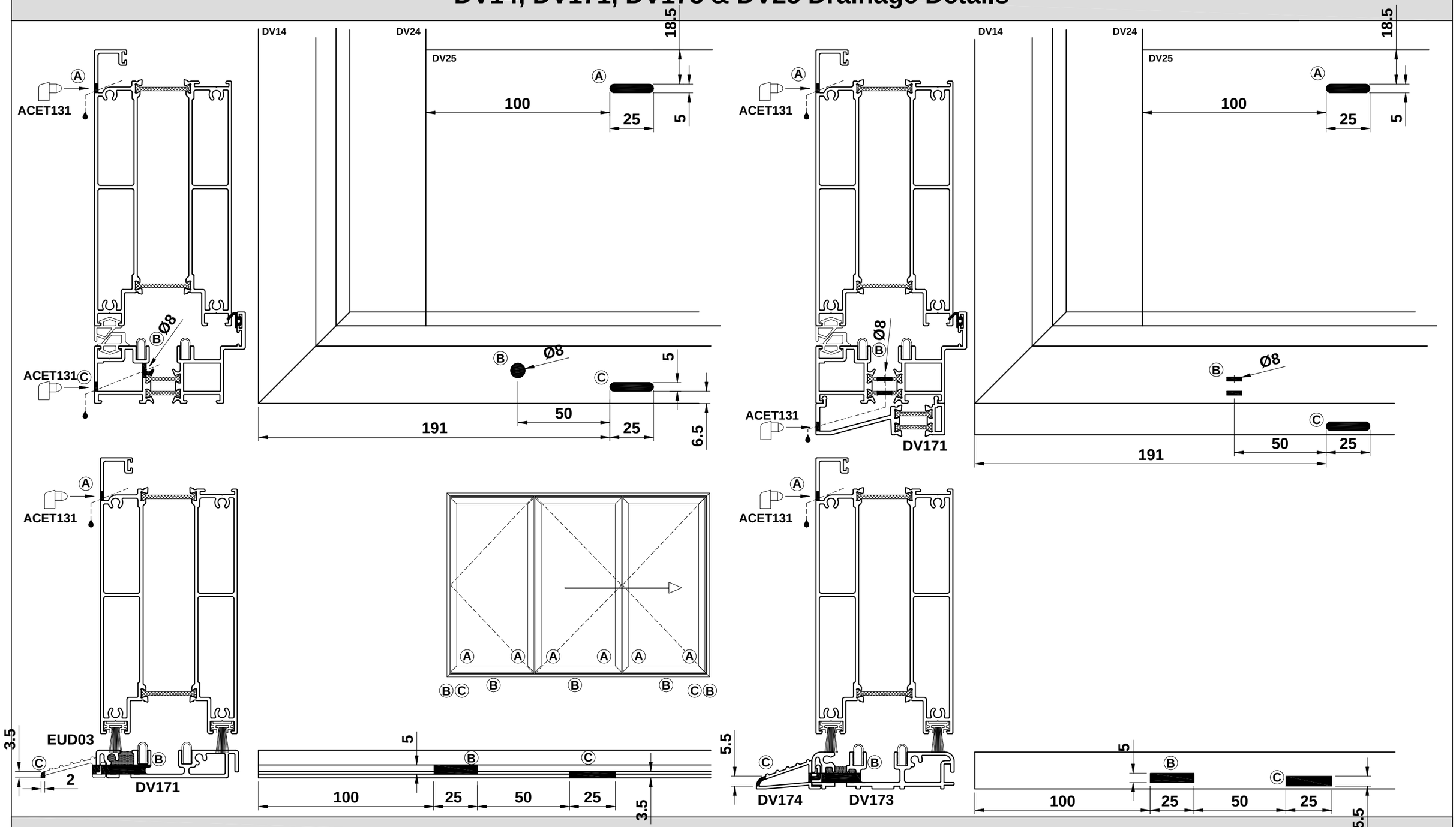

Do Not Scale From This Drawing

DV14, DV171, DV173 & DV23 Drainage Details

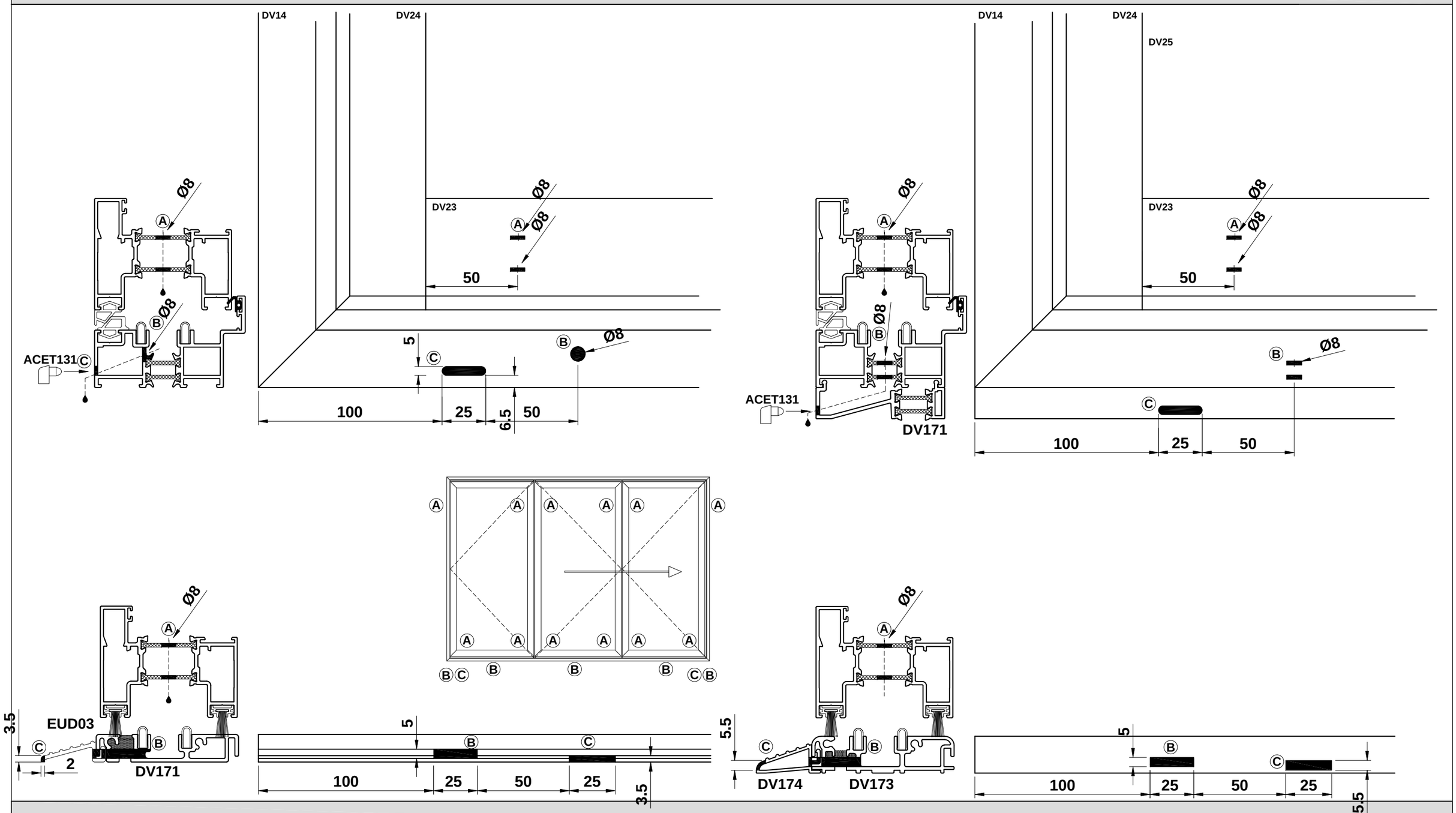

Do Not Scale From This Drawing

Stile Preparation

IF USING AN END MILLER, THE BELOW PREP CAN BE USED

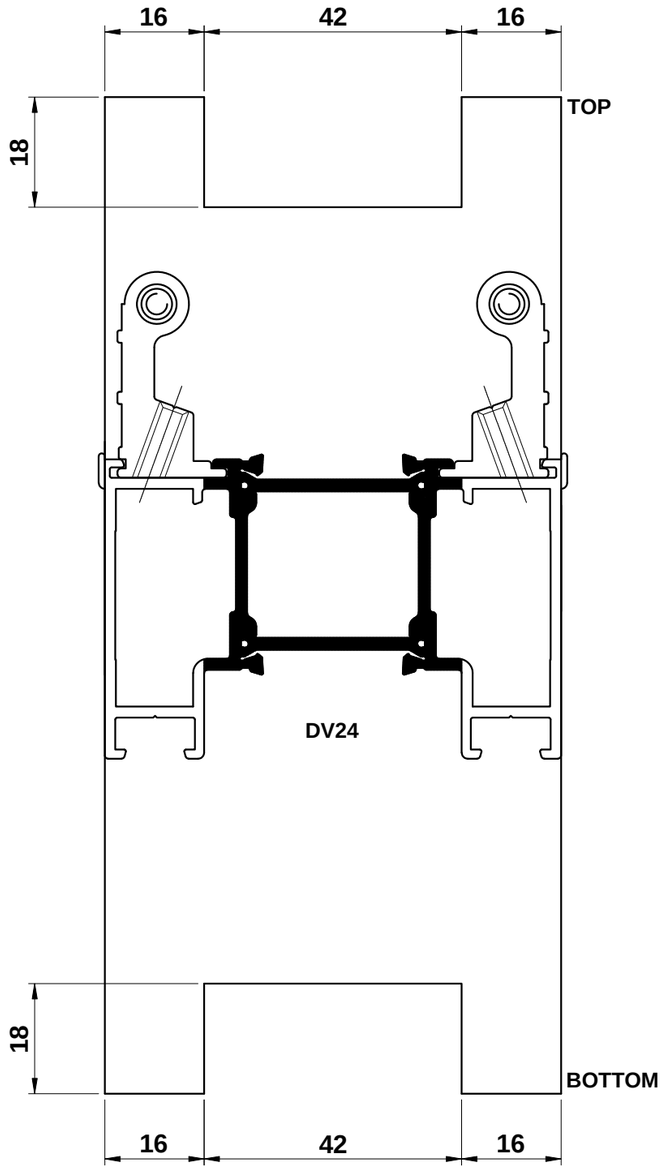

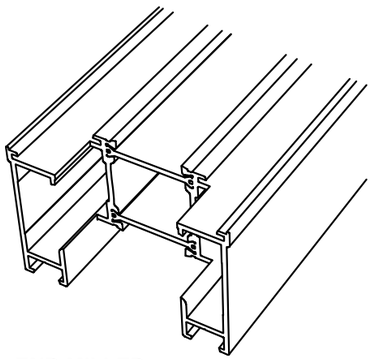

END MILLED

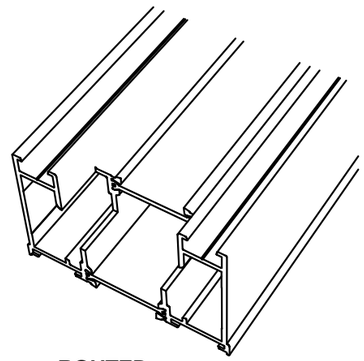

ROUTED

IF USING A ROUTER, THE BELOW PREP CAN BE USED IF PREFFERED

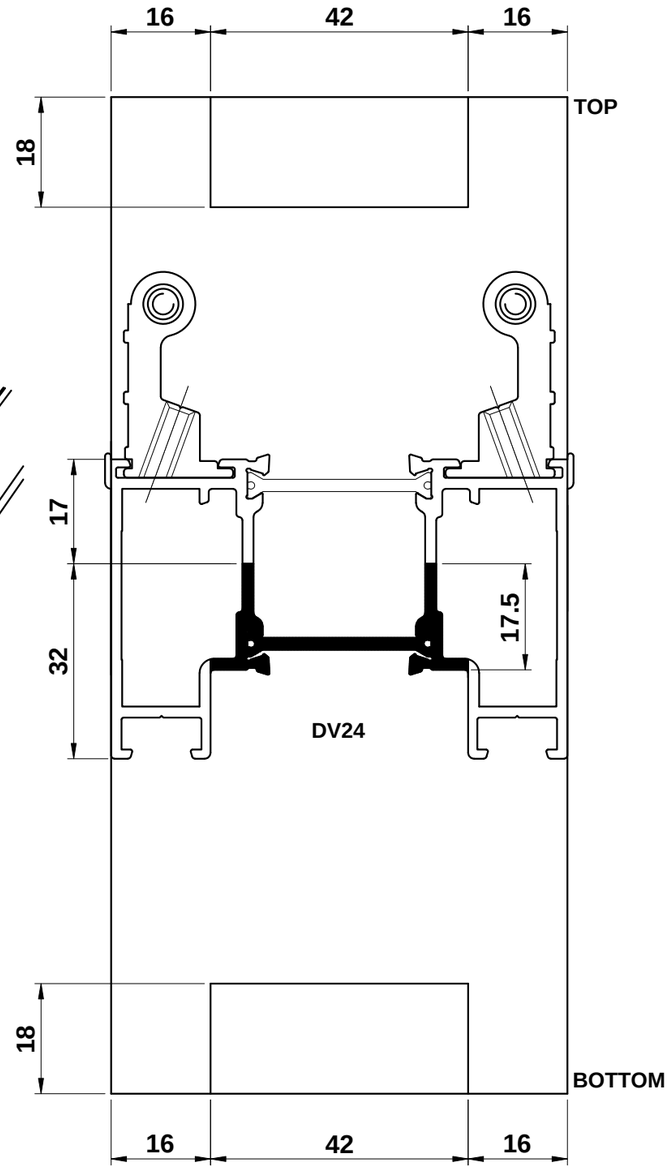

Do Not Scale From This Drawing

Open Out-ACDV718/9 Preparation Locking into DV24 with ACDV251 Handle

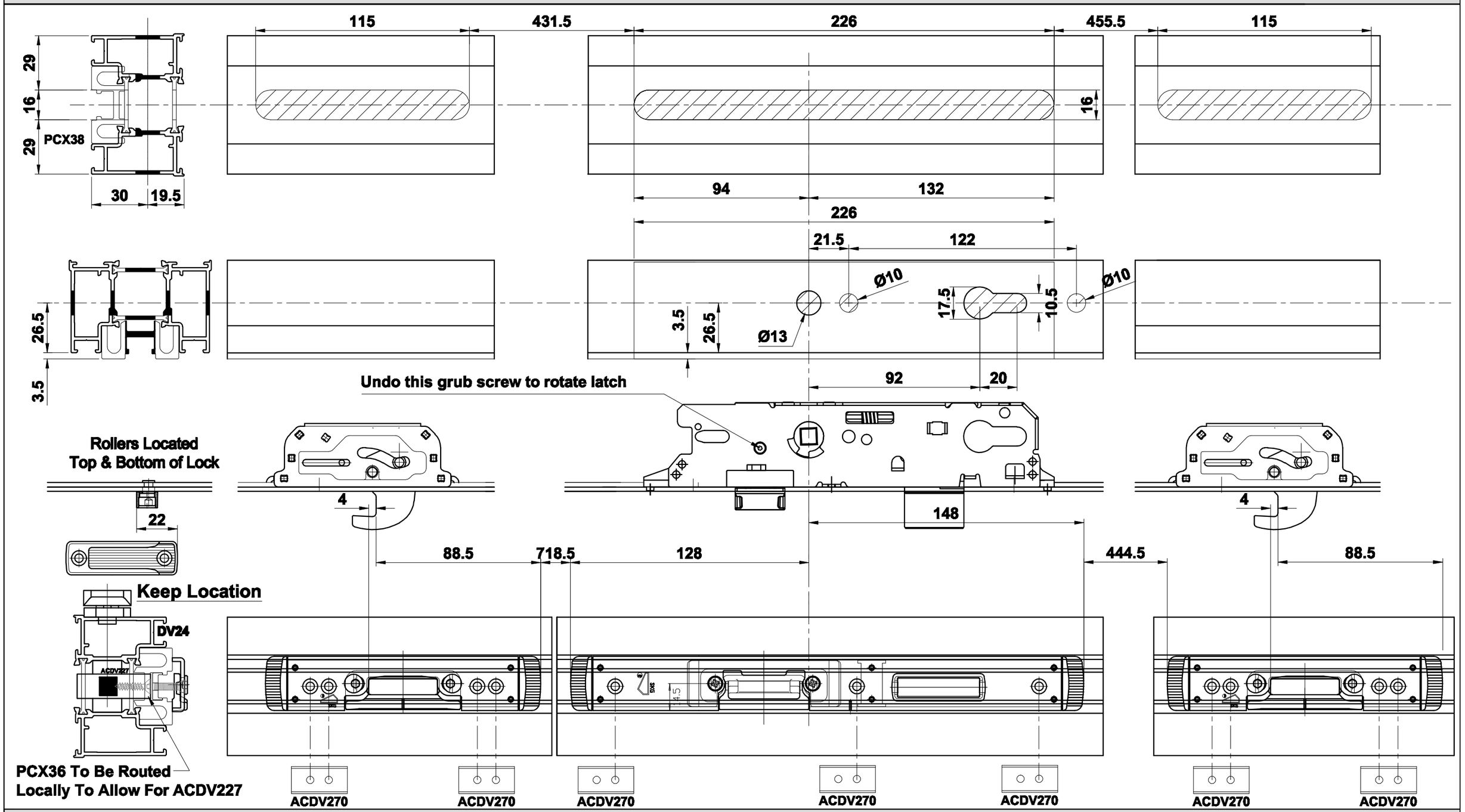

Do Not Scale From This Drawing

Open Out-ACDV718/719 Preparation Locking into DV14 with ACDV251 Handle

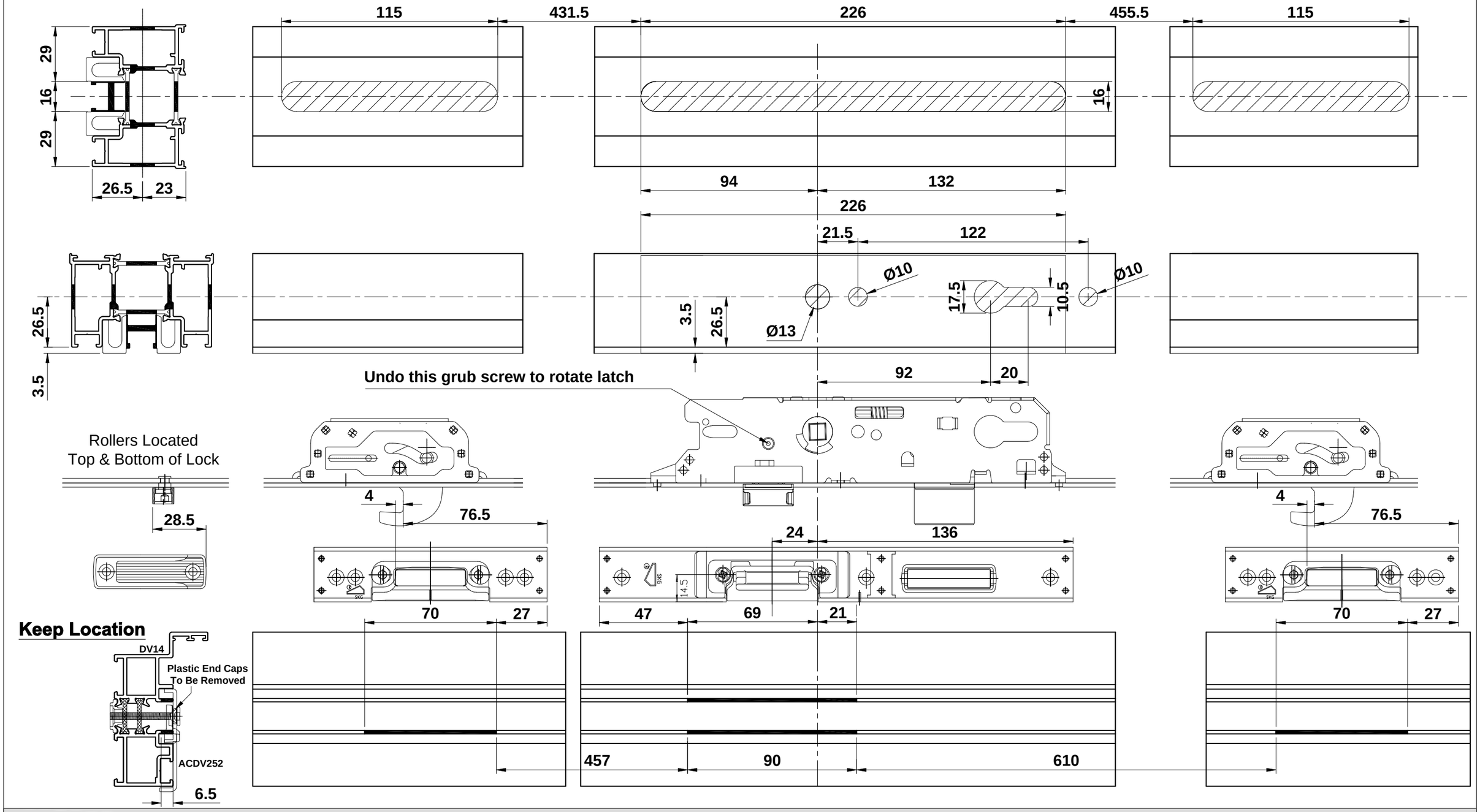

Do Not Scale From This Drawing

Open Out-ACDV717 Preparation Locking into DV24 with ACMX120 Handle

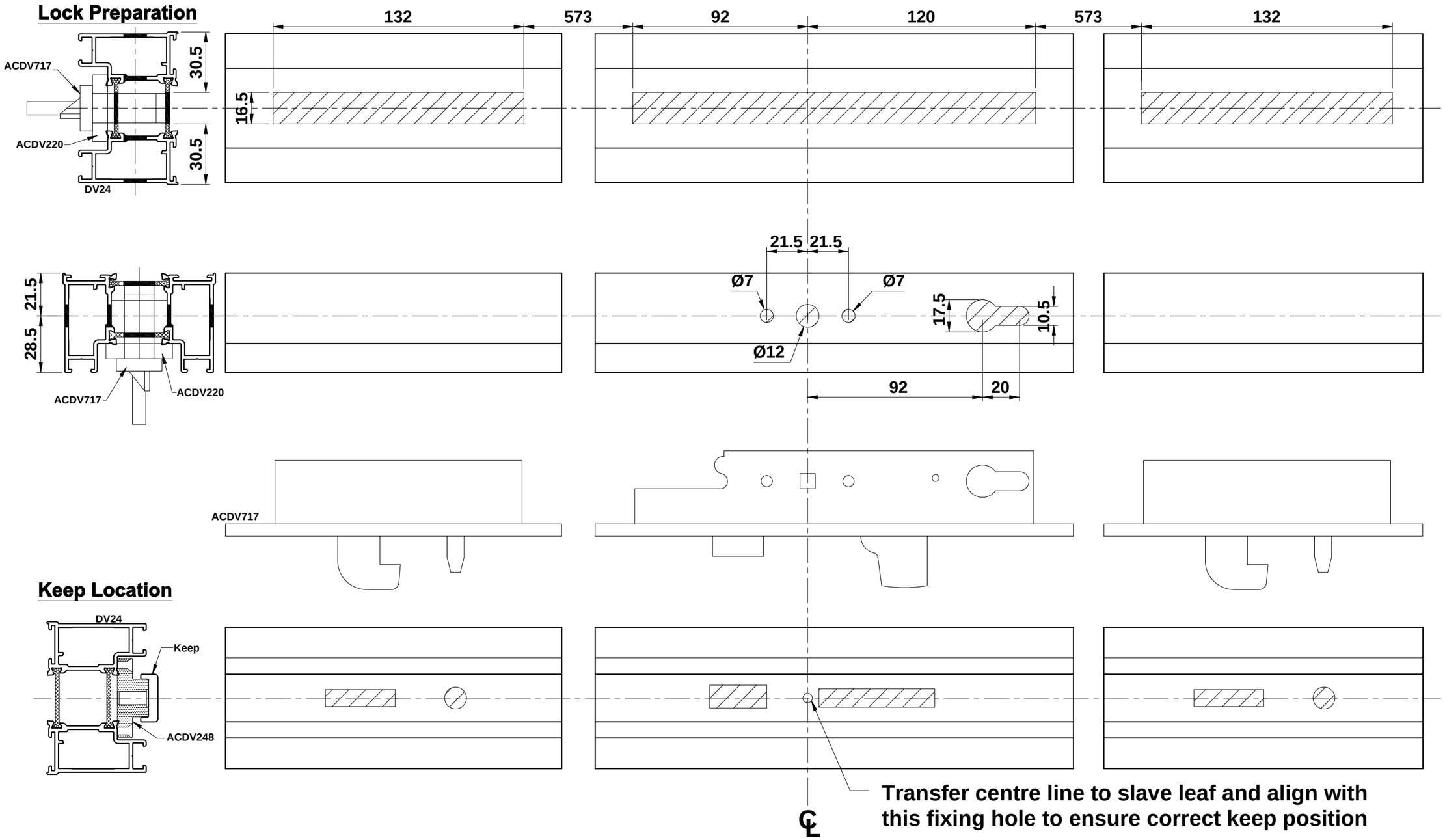

Do Not Scale From This Drawing

Open Out-ACDV717 Preparation Locking into DV14 with ACMX120 Handle

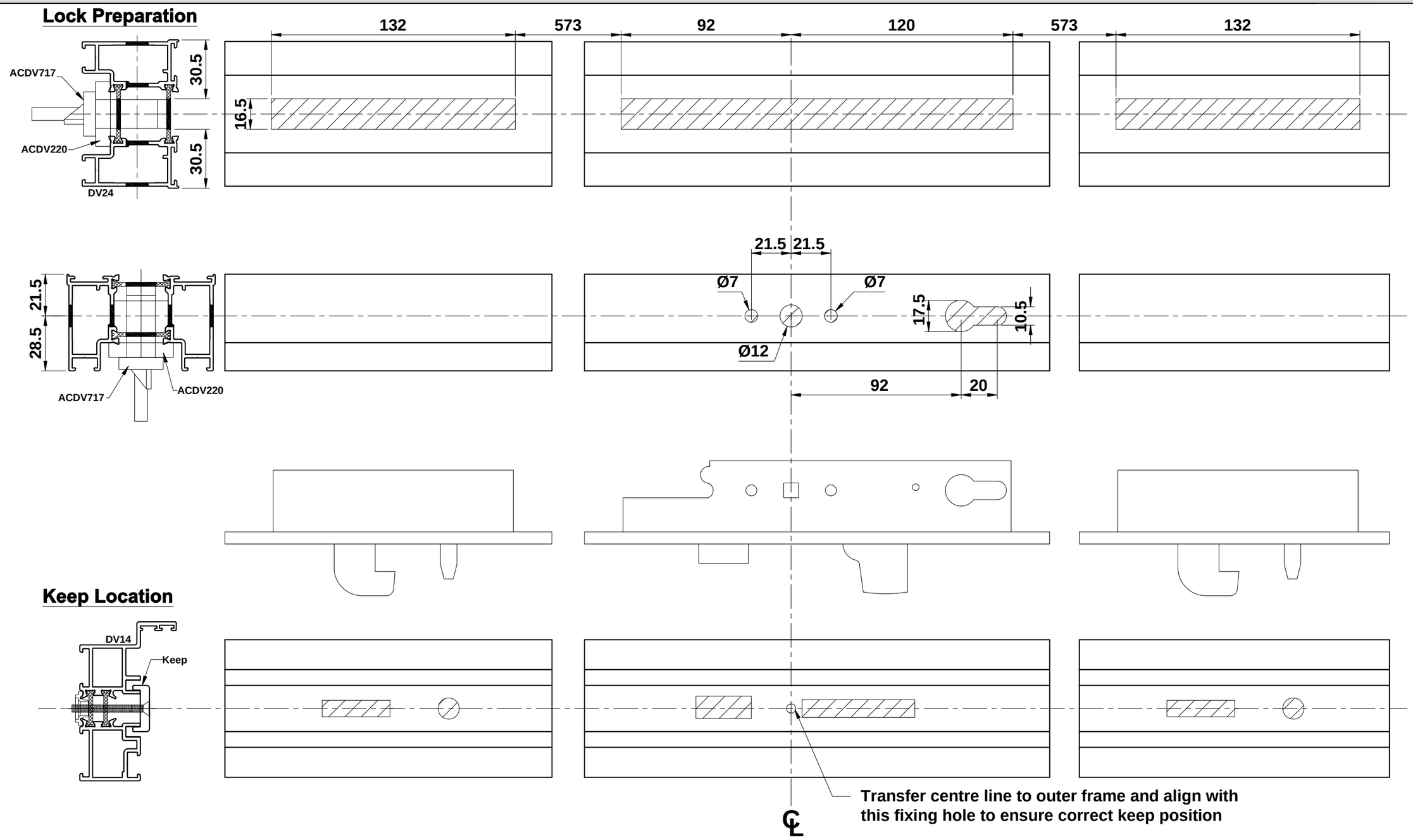

Do Not Scale From This Drawing

Open Out - Shootbolt Preparation with DV14 Threshold

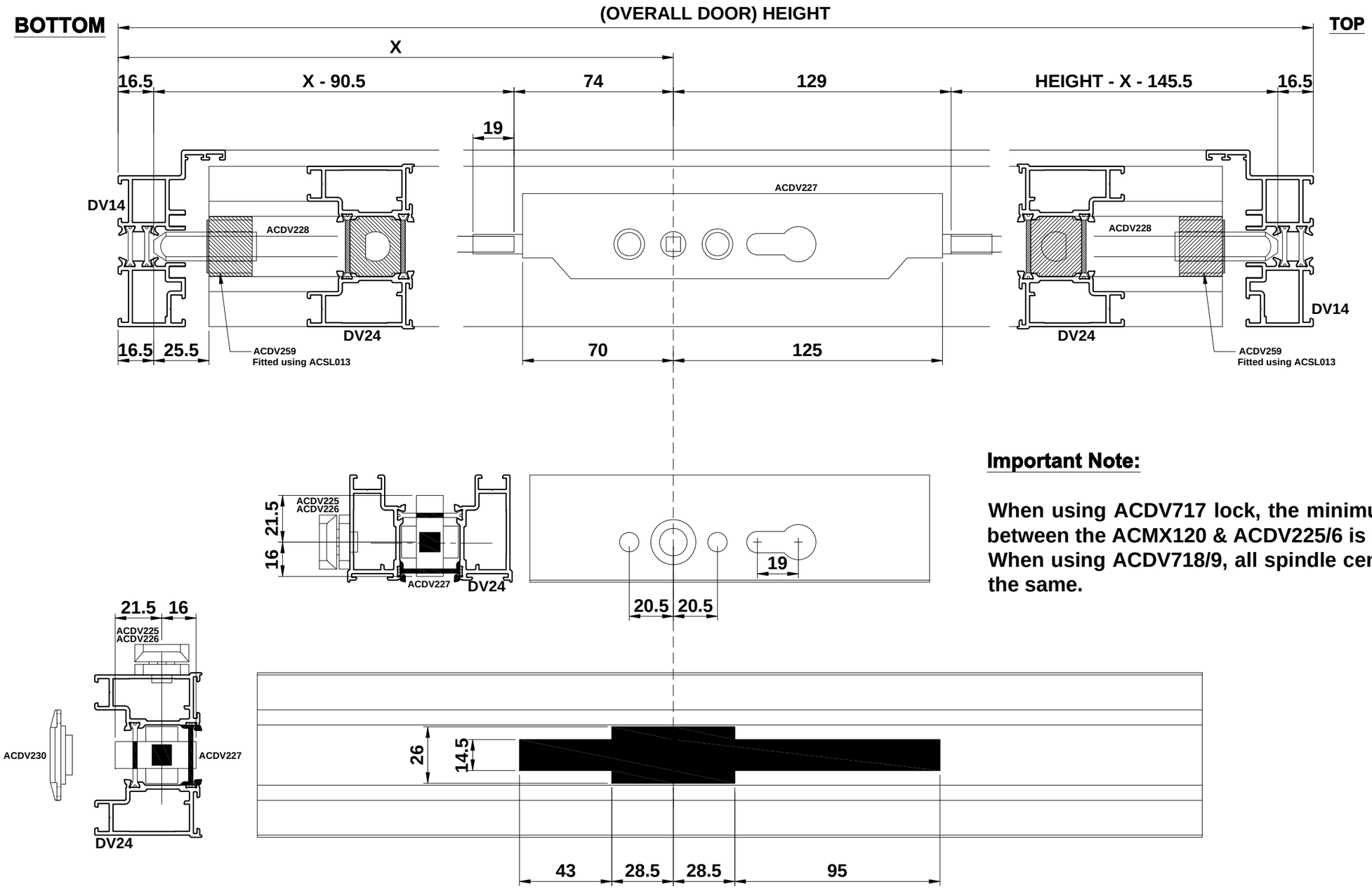

Important Note:

When using ACDV717 lock, the minimum distance between the ACMX120 & ACDV225/6 is 95mm.
When using ACDV718/9, all spindle centres can be the same.

Do Not Scale From This Drawing

Open Out - Shootbolt Preparation with DV171 Threshold

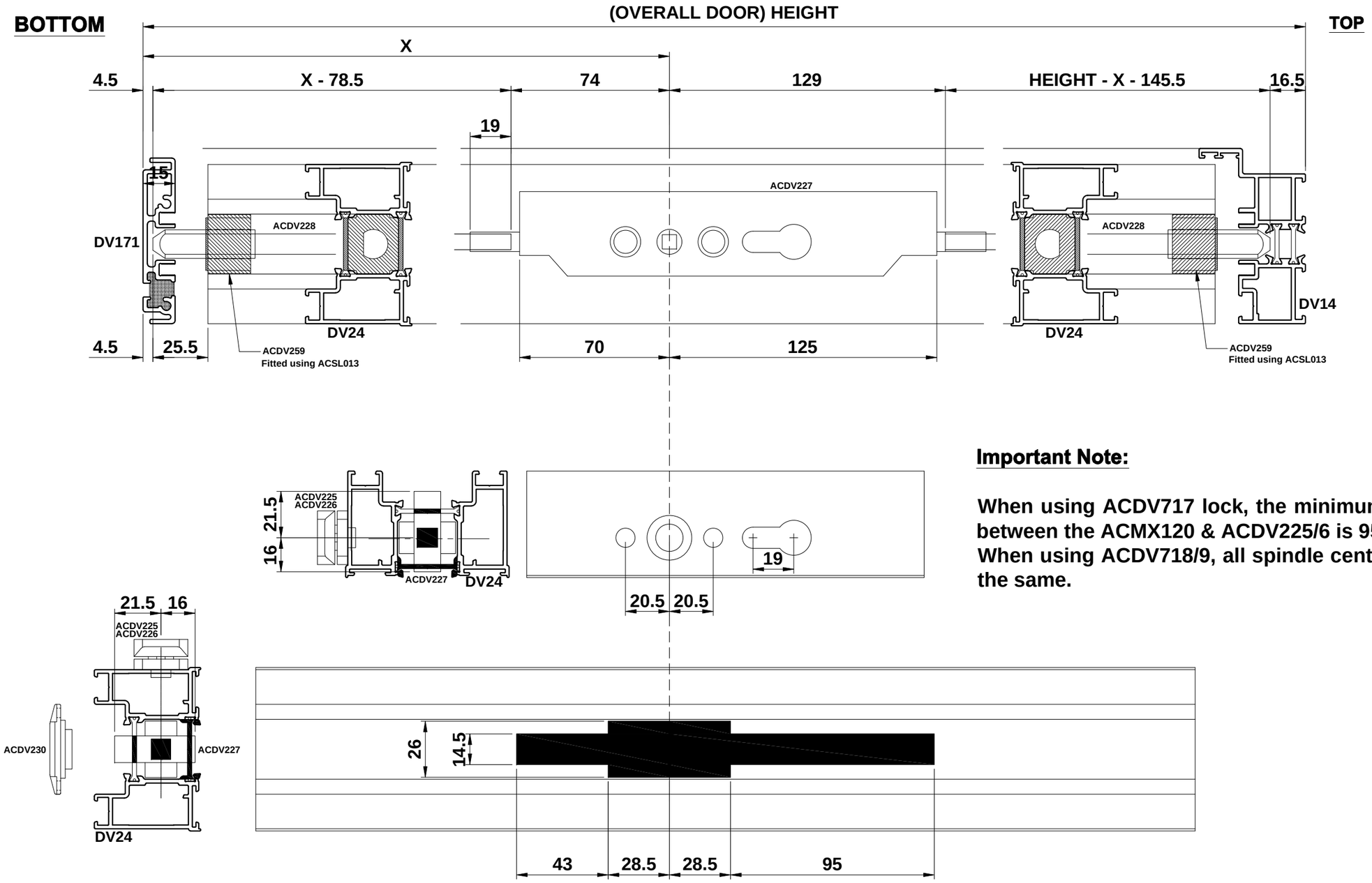

Important Note:

When using ACDV717 lock, the minimum distance between the ACMX120 & ACDV225/6 is 95mm.
When using ACDV718/9, all spindle centres can be the same.

Do Not Scale From This Drawing

Open Out - Shootbolt Preparation with DV173 Threshold

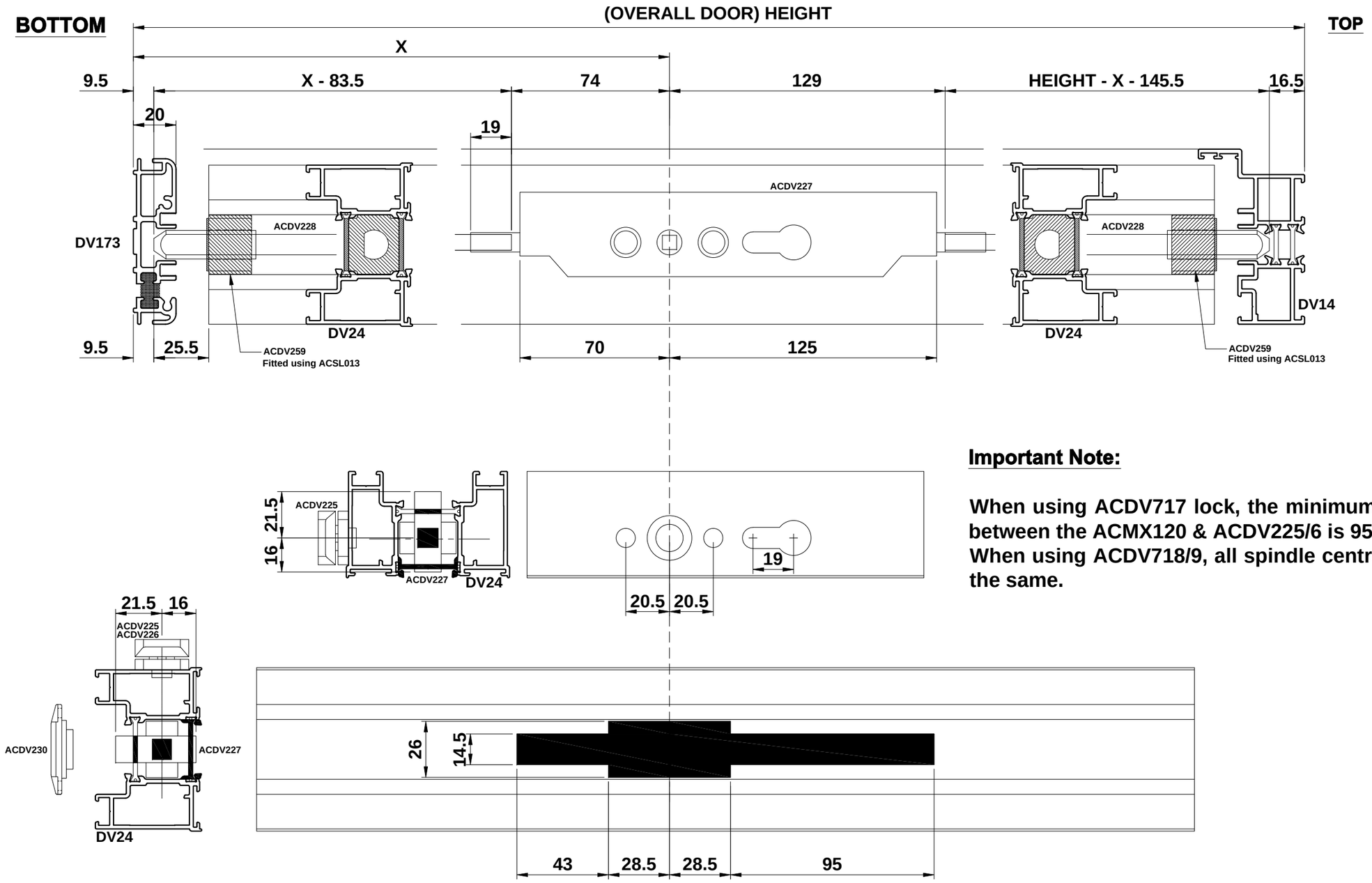

Important Note:

When using ACDV717 lock, the minimum distance between the ACMX120 & ACDV225/6 is 95mm.
When using ACDV718/9, all spindle centres can be the same.

Hinges

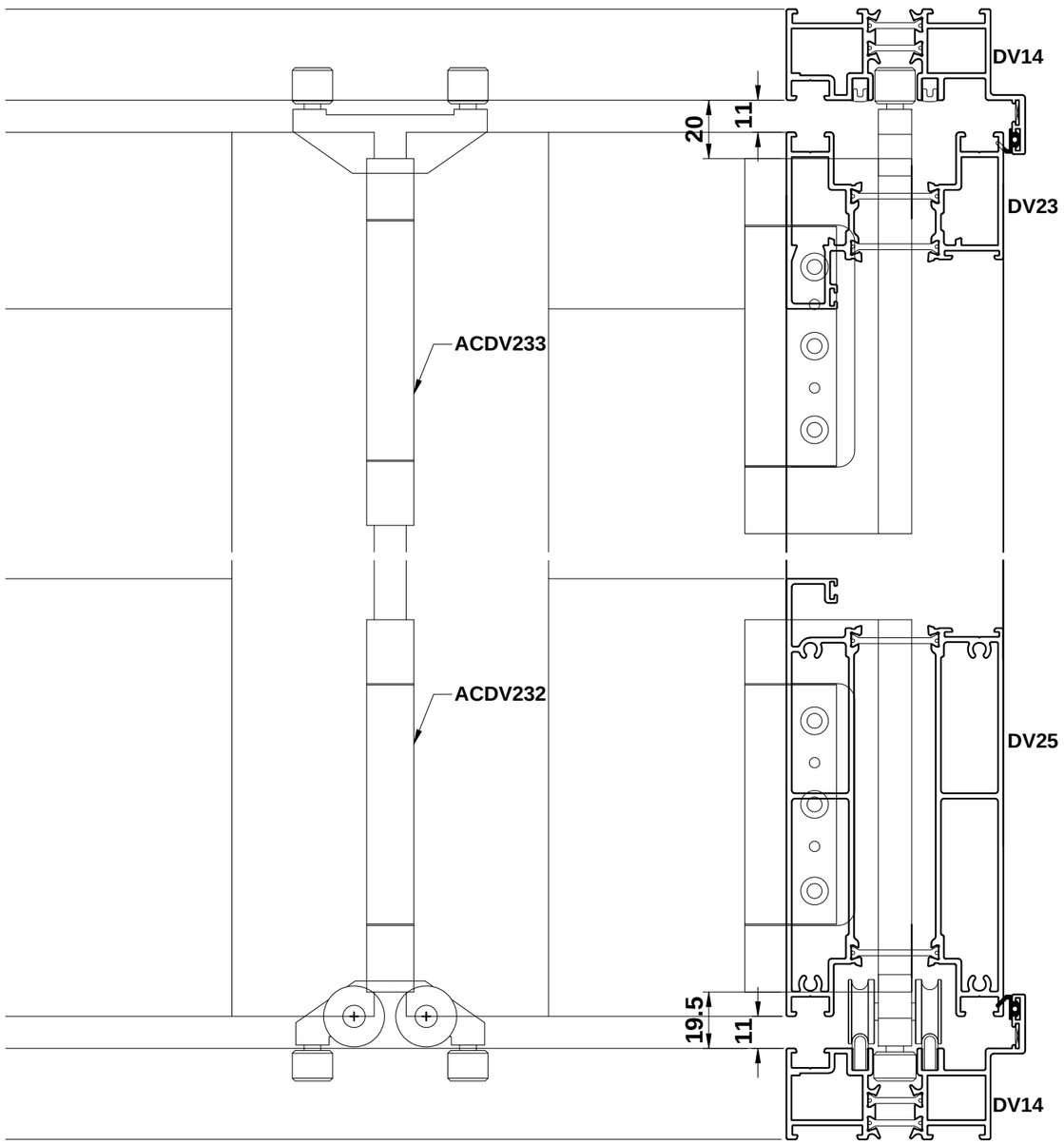

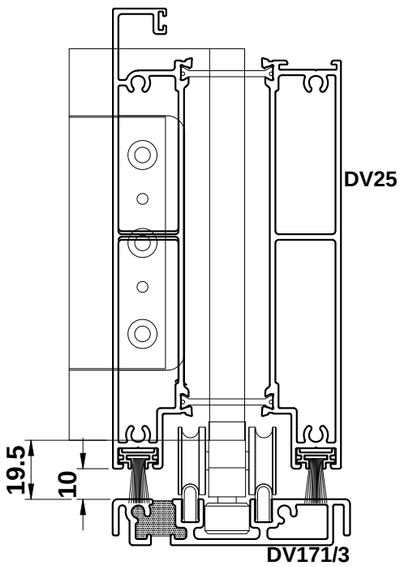

Typical Hinge Layout:
A = ACDV231 Intermediate Hinge
B = ACDV232 Bottom Roller Carrier
C = ACDV233 Top Guide Carrier
D = ACDV234 'D' Handle Hinge

Note:
Once hinges are set into position, replace centre machine screw with a self tapping screw for permanent fixing.

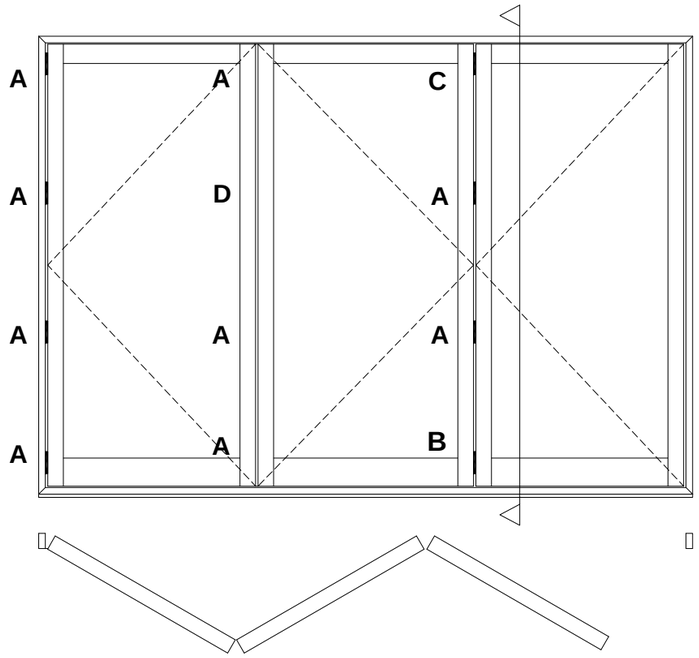

Open Out - ACDV257 Locations

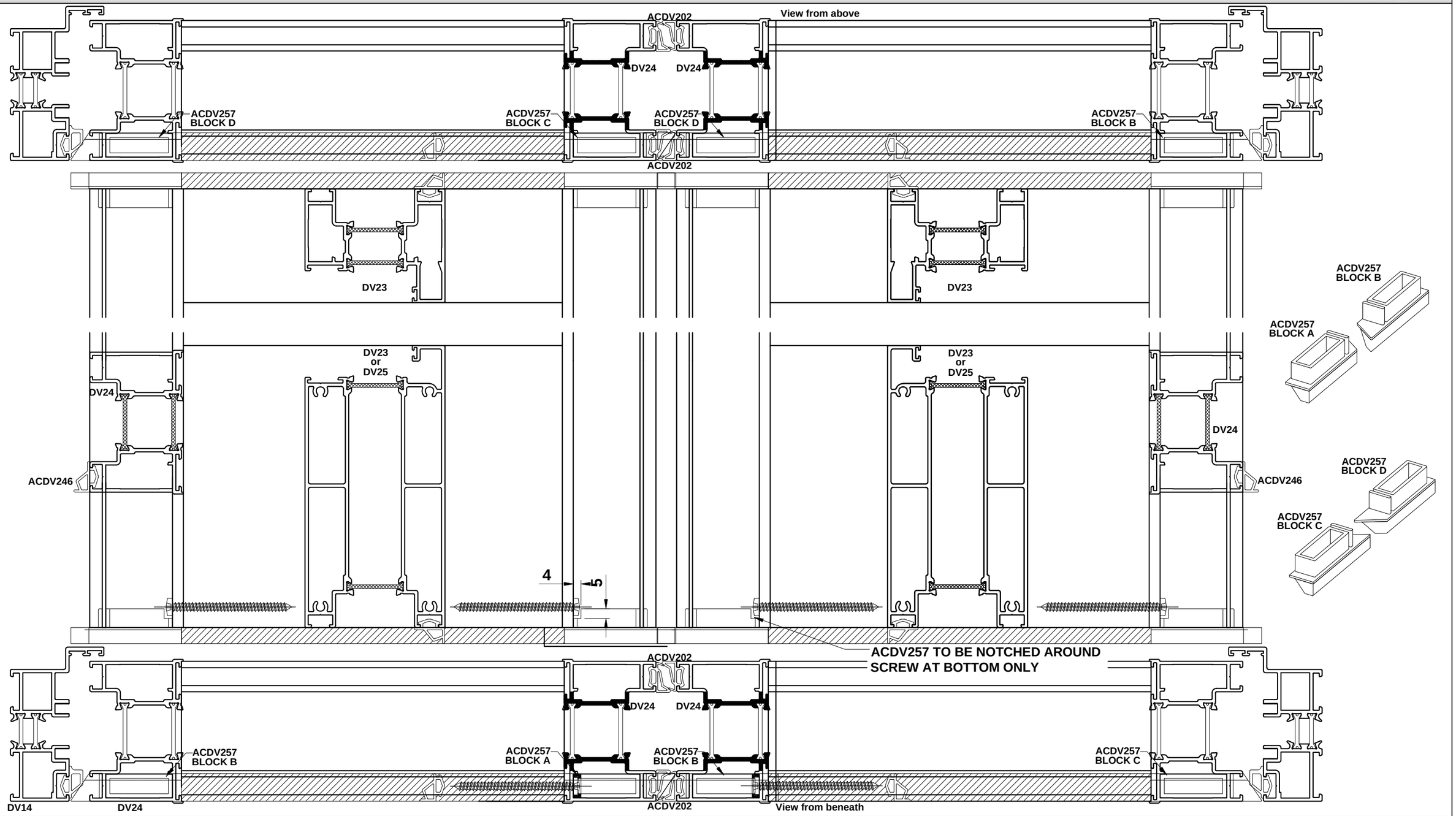

Open Out - ACDV261 Positions

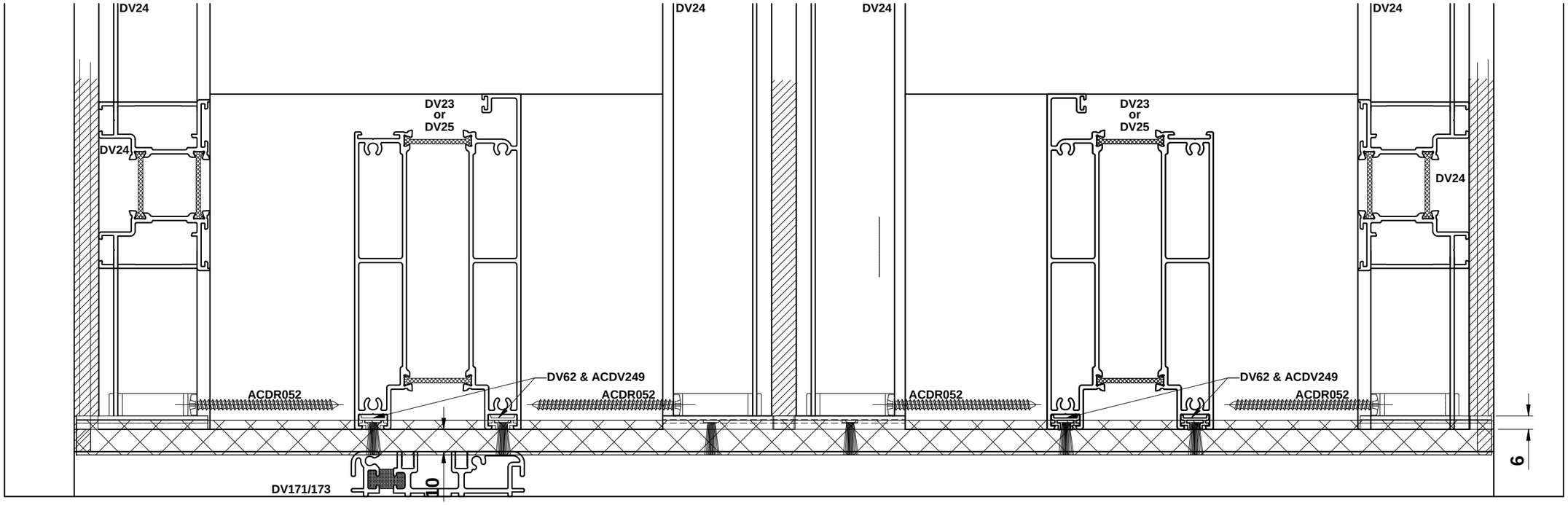

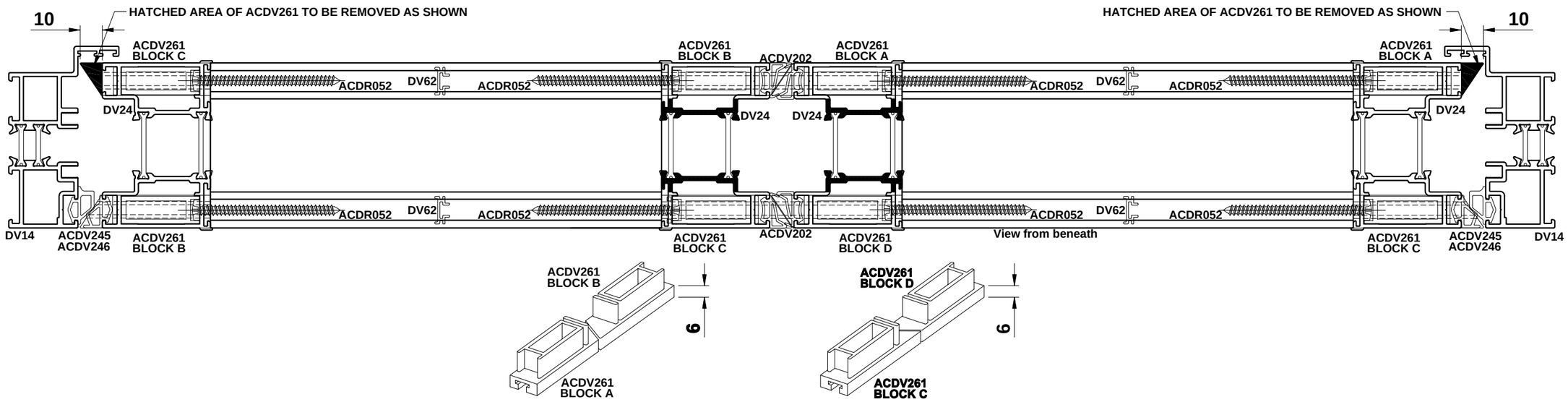

Open Out - Beads & Glazing

INTERNALLY BEADED

NOTE: The last DV63 bead must be fitted as 3 pieces due to mitre

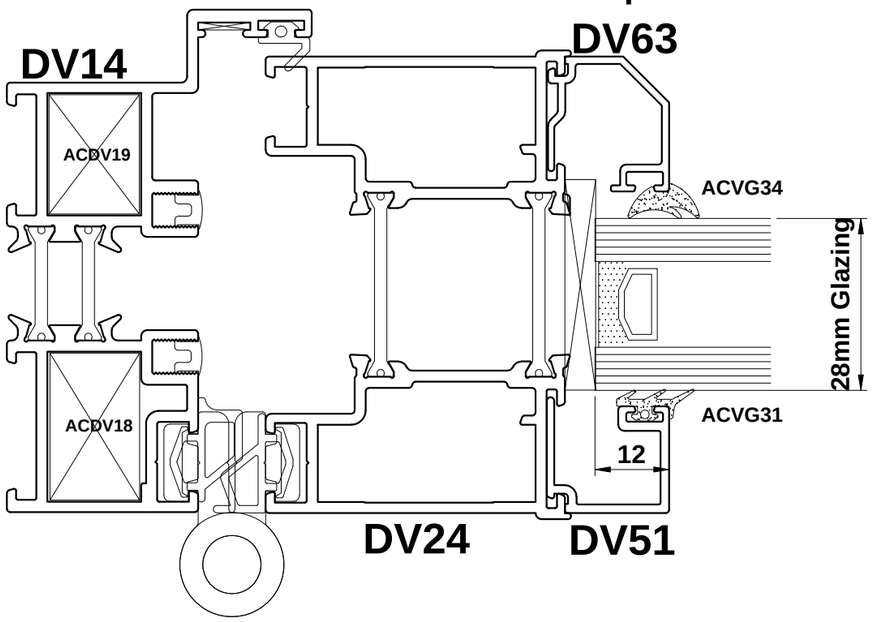

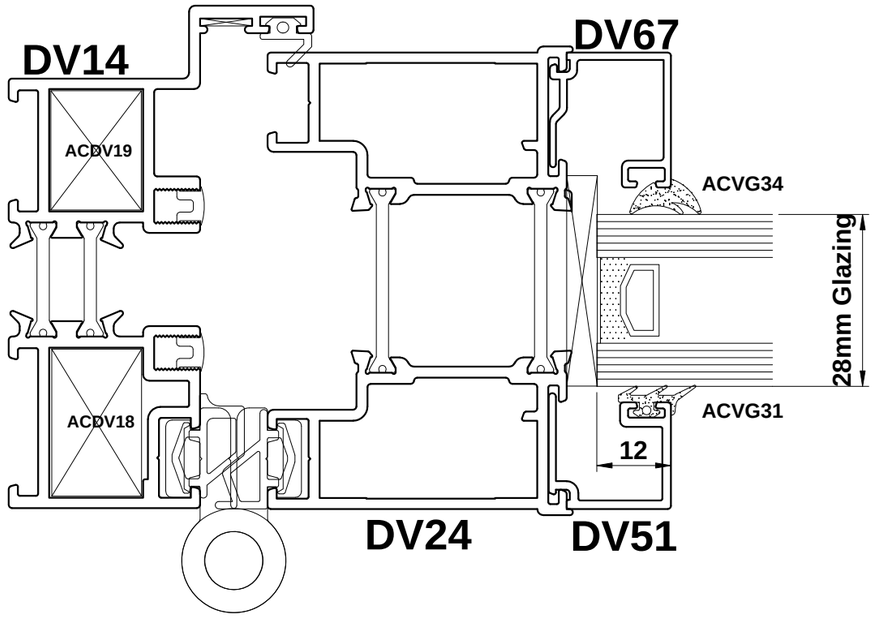

28mm Only	
BEADS	GASKET
DV63 DV67	Outside: ACVG31 3mm 'E' Gasket
	Inside: ACVG34 5mm Wedge Gasket

Open Out - ACDV308

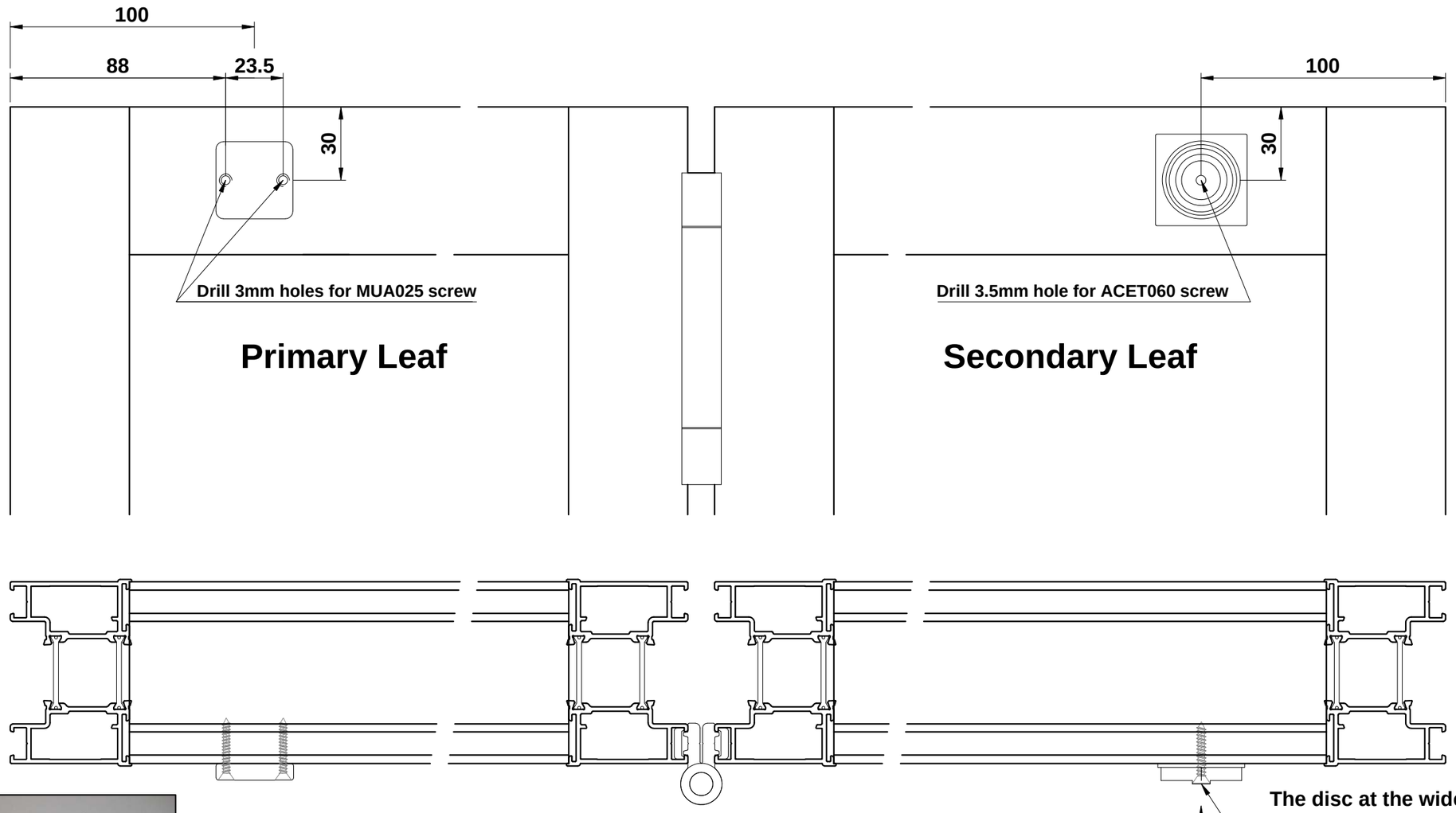

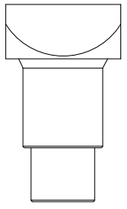

The disc at the wider end of the catch unscrews to allow fixing.

WARNING - the catch is SPRING LOADED, take care when removing from base plate and point in a safe direction

Section E

Do Not Scale From This Drawing

Section E

Visofold 2000
Open In
Construction Drawings

Index

E DV **Construction Drawings**

IF IN DOUBT ASK!

Open In - Door Profiles

Profiles	Tooling / Components
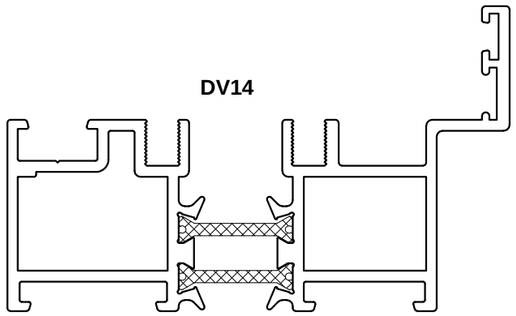 DV14	Corner Chevron - ACDV24 Mechanical cleat - ACDV18 Mechanical cleat - ACDV19 Tooling - ACDV900
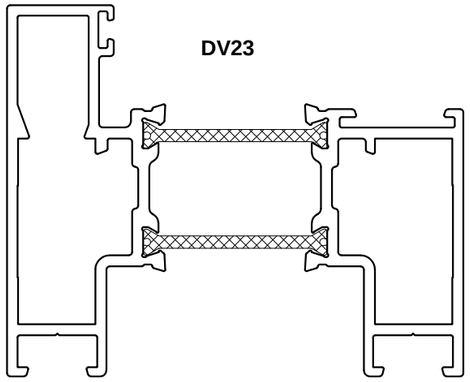 DV23	Mechanical cleat - ACDV22
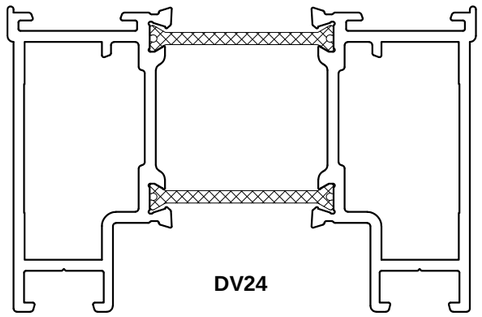 DV24	

Profiles	Tooling / Components
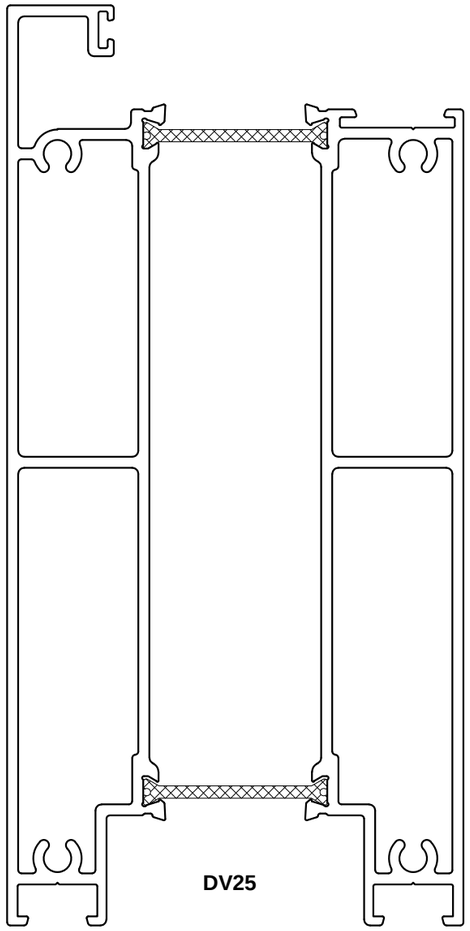 DV25	
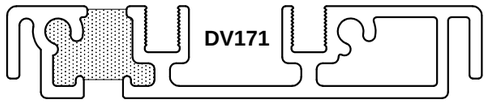 DV171	
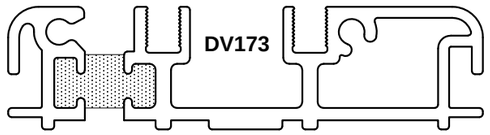 DV173	

Do Not Scale From This Drawing

Open In - DV14 Corner Cleat Preparation

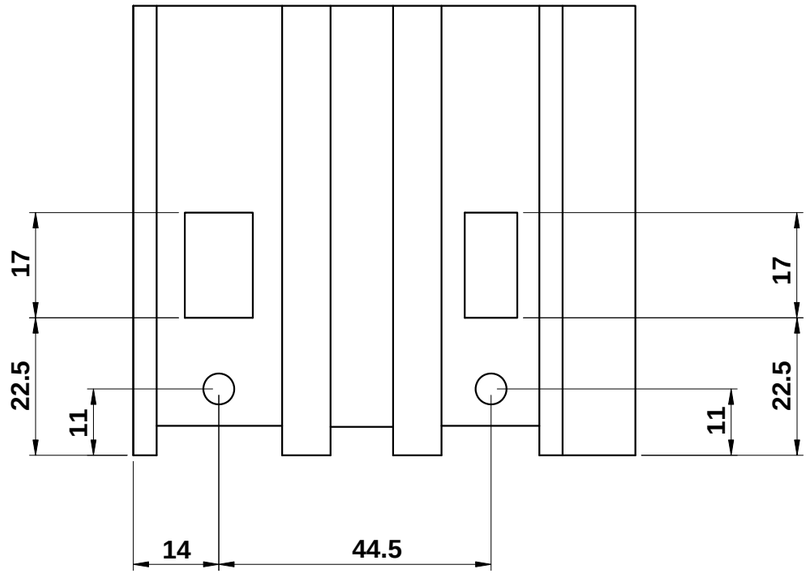

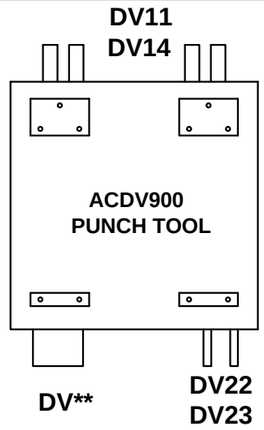

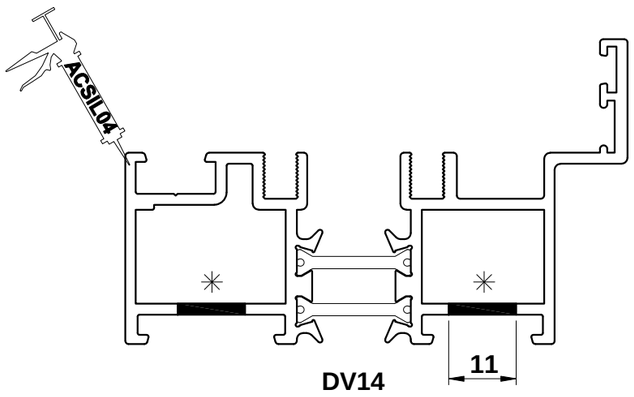

CORNER CLEAT-ACDV18
CORNER CLEAT-ACDV19

APPLY SILICONE (ACSIL04) TO EDGE OF PROFILE.

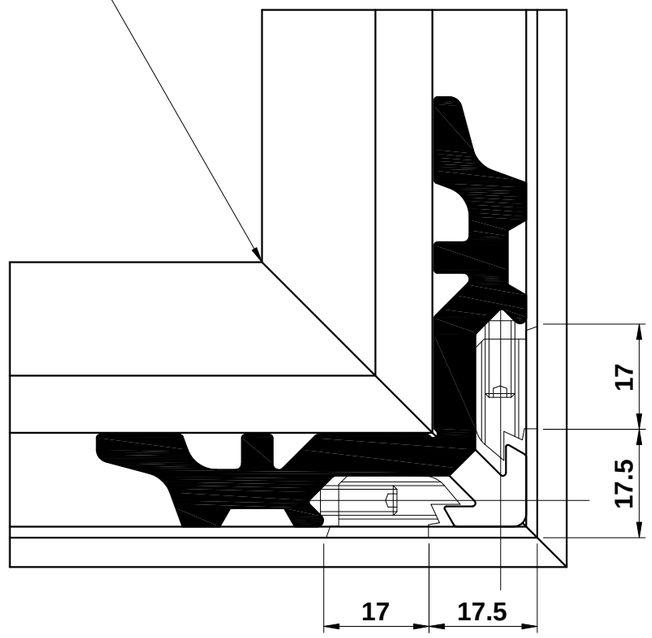

APPLY GLUE (ACSIL013) TO CLEAT APERTURE MARKED ✳

Do Not Scale From This Drawing

Open In - Square Join

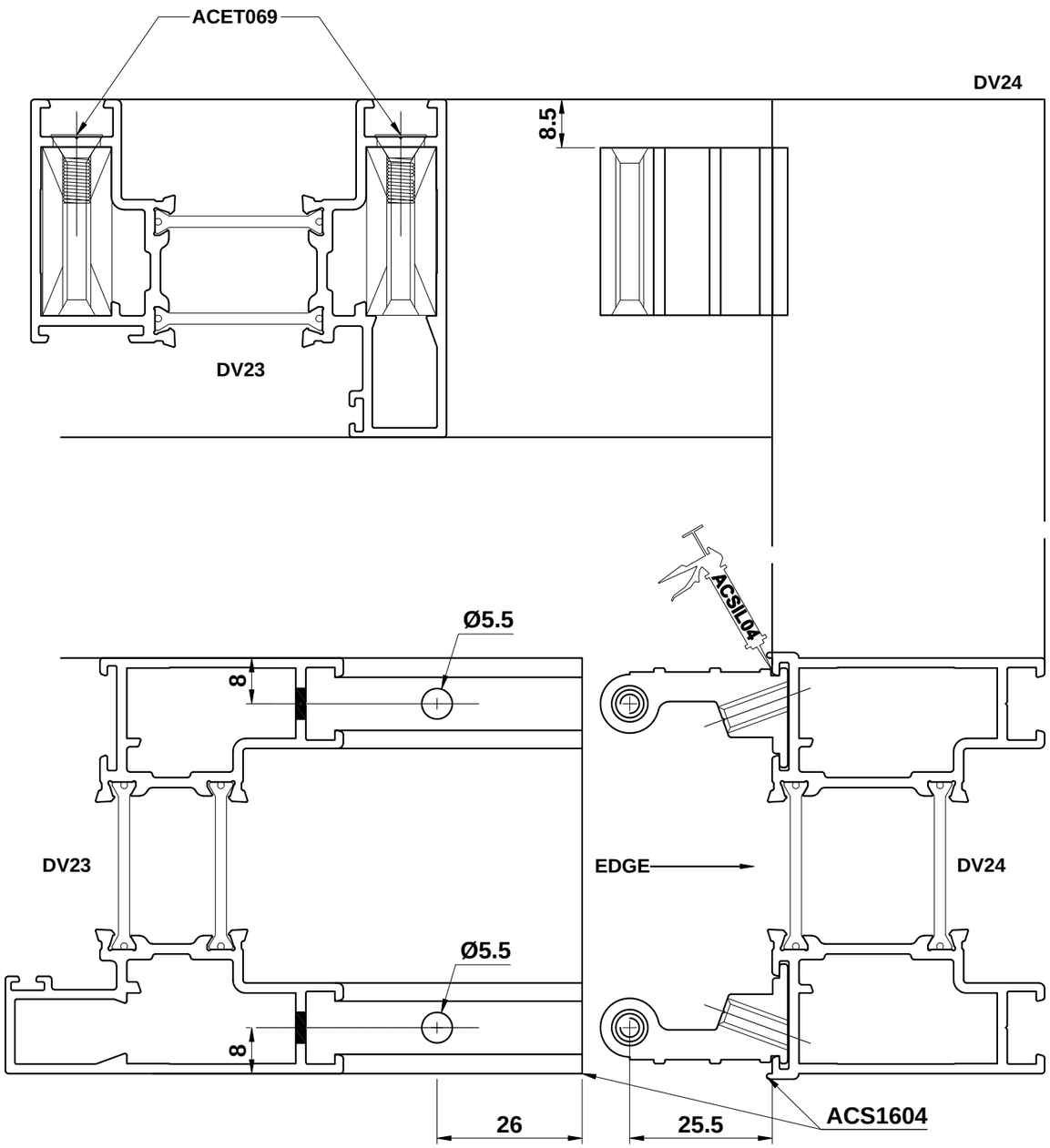

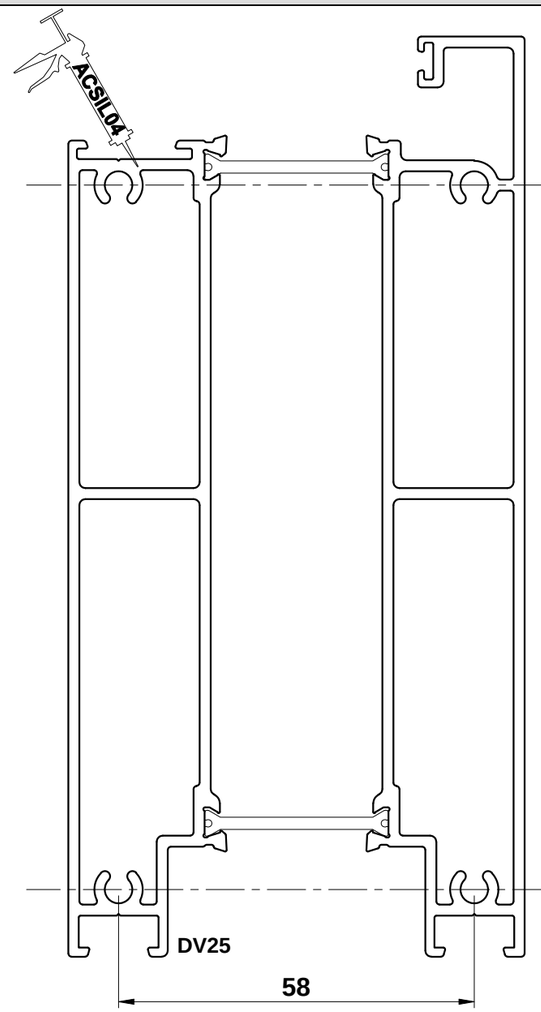

IMPORTANT NOTE

If using ACDV261 with a low threshold, the above prep should be 6mm lower on the DV24 to ensure flush finish.

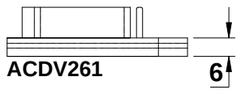

4 x ACDR052 per join

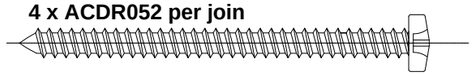

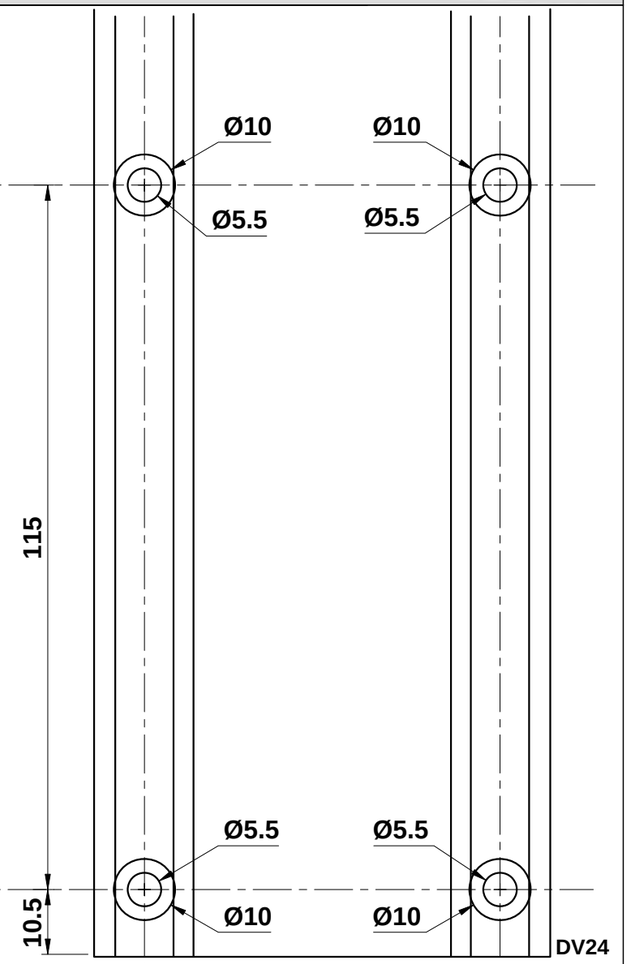

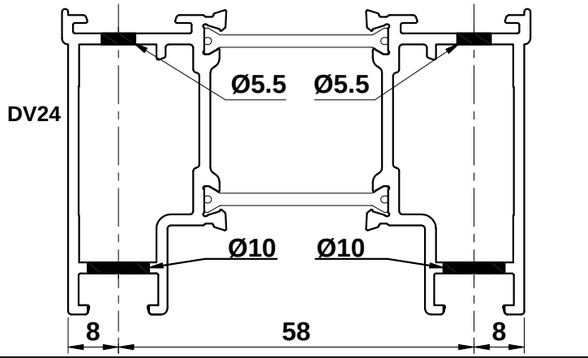

Do Not Scale From This Drawing

Open In - DV171 Low Threshold

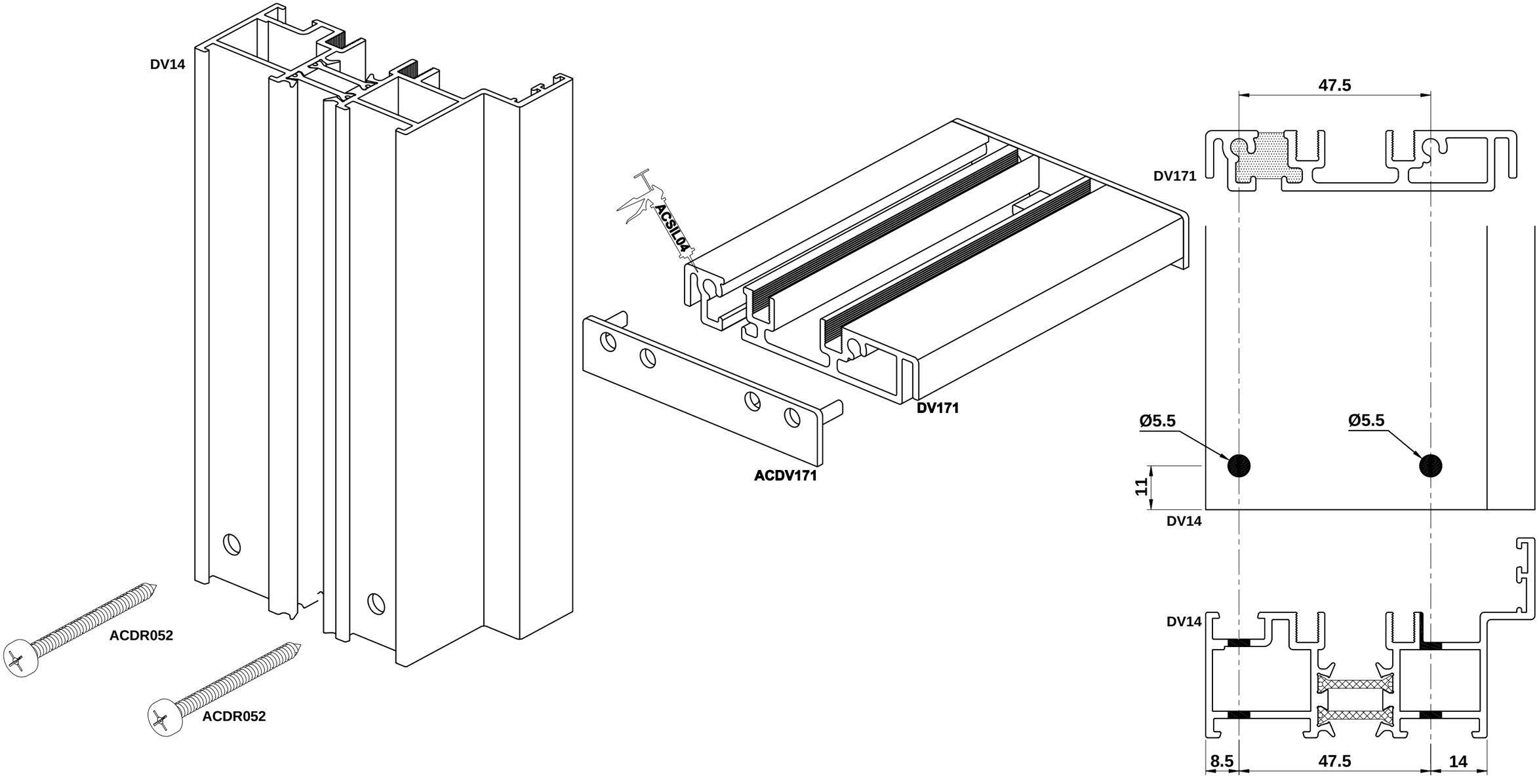

Do Not Scale From This Drawing

Open In - DV173 Low Threshold

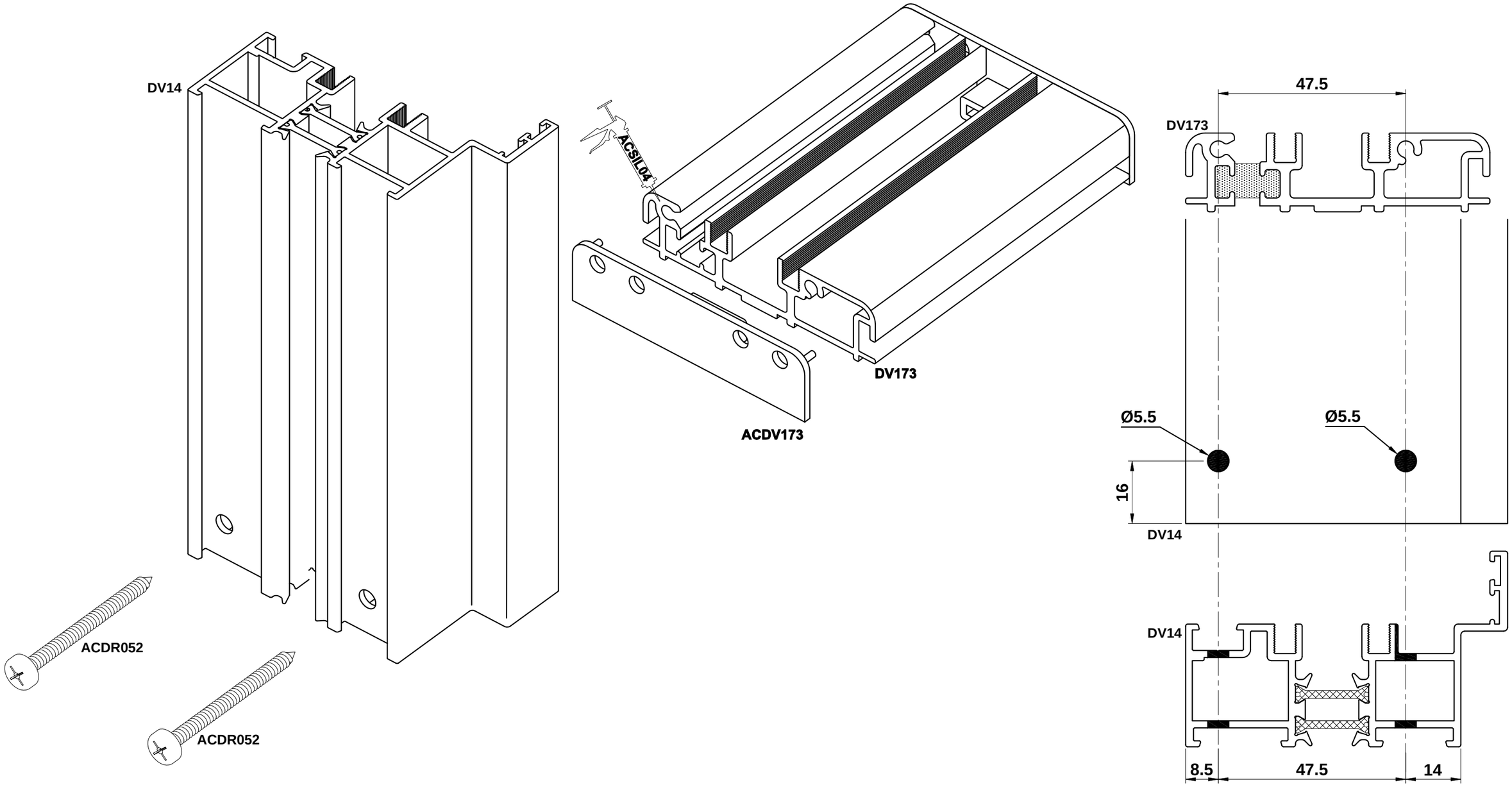

Do Not Scale From This Drawing

Open In - DV14, DV171, DV173 & DV25 Drainage Details

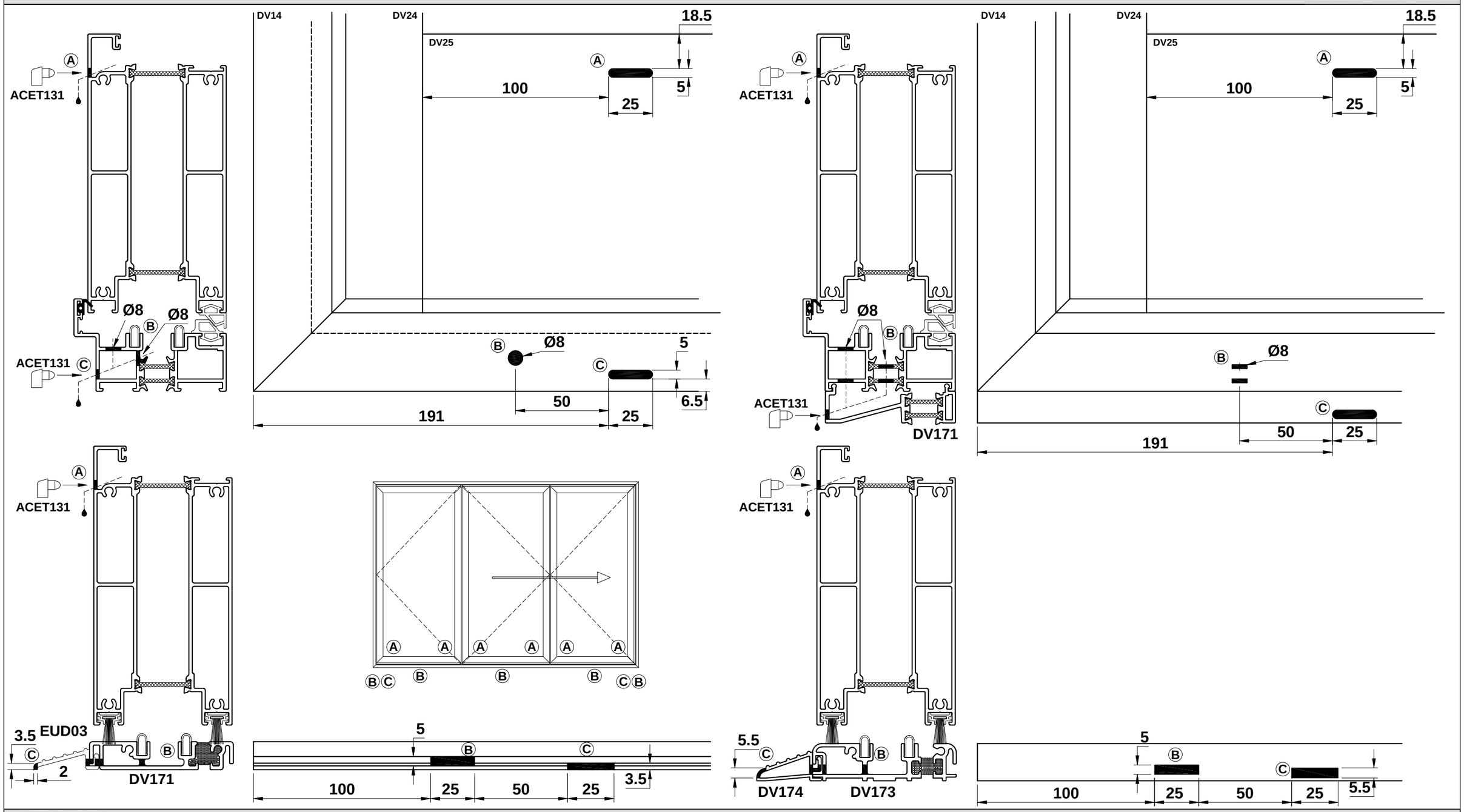

Do Not Scale From This Drawing

Open In - DV14, DV171, DV173 & DV23 Drainage Details

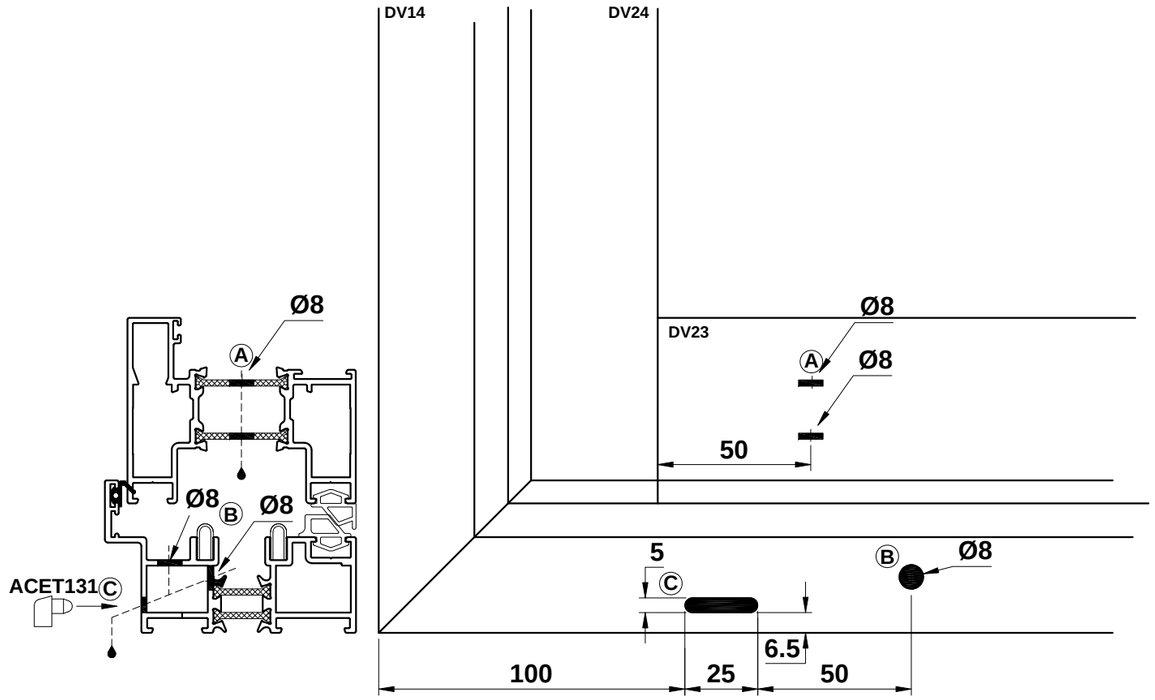

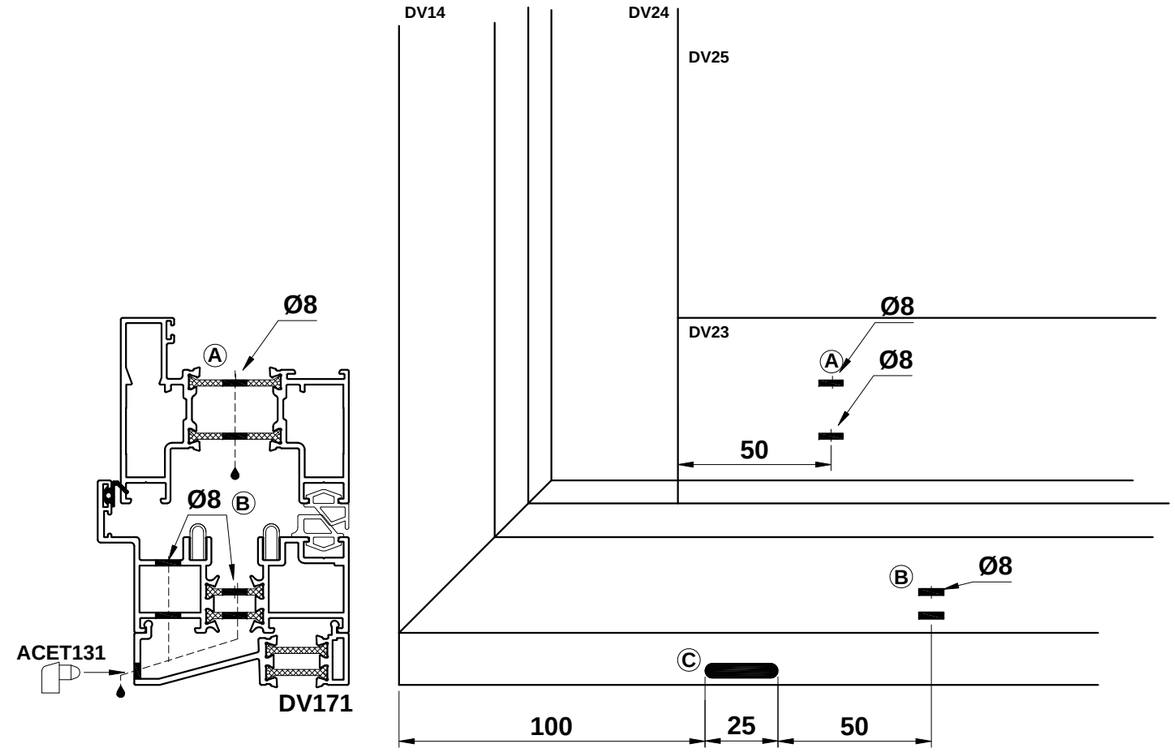

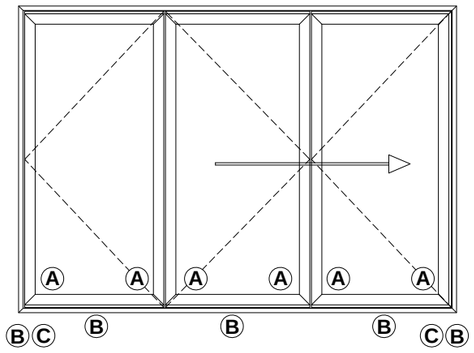

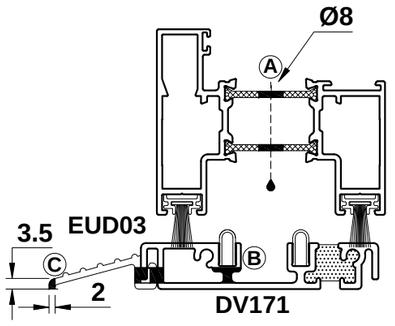

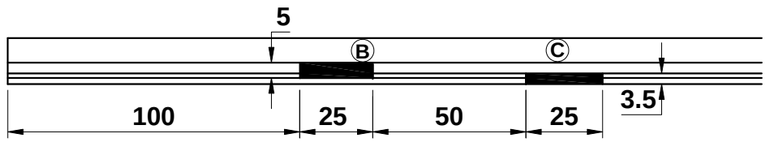

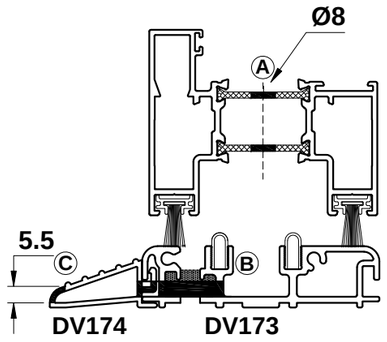

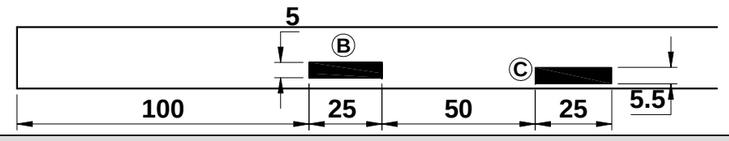

Do Not Scale From This Drawing

Open In - Stile Preparation

IF USING AN END MILLER, THE BELOW PREP CAN BE USED

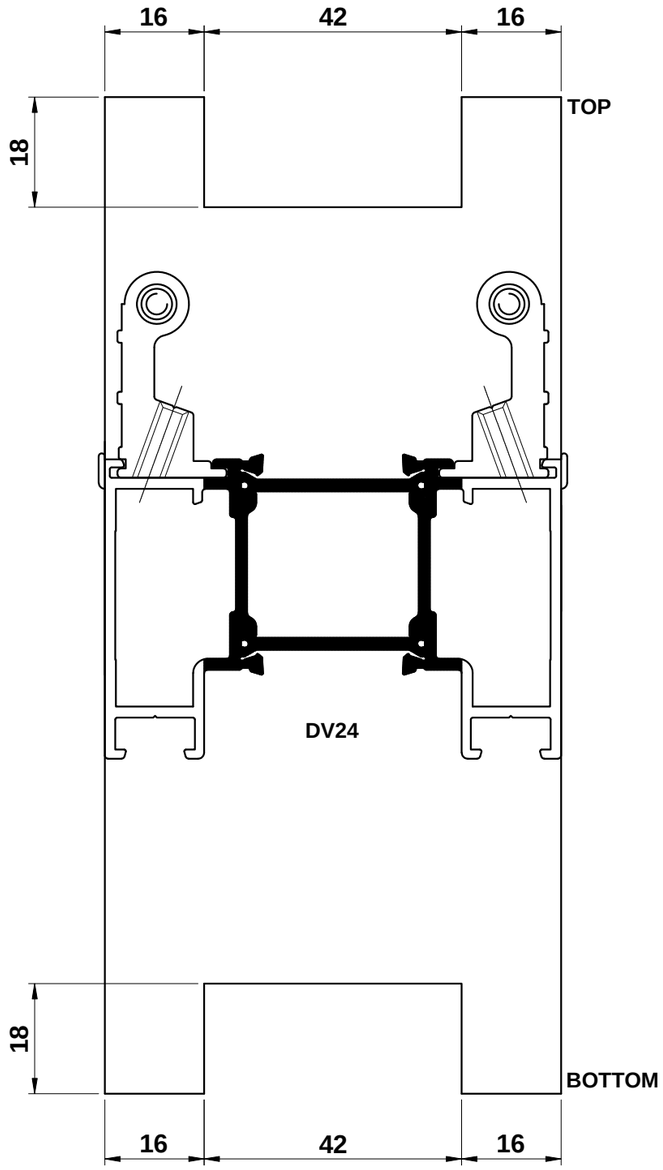

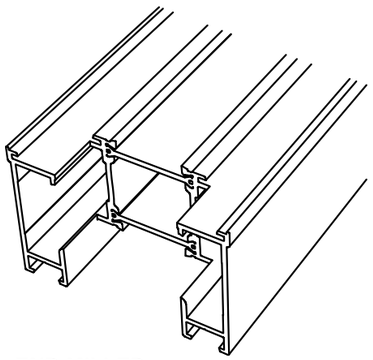

END MILLED

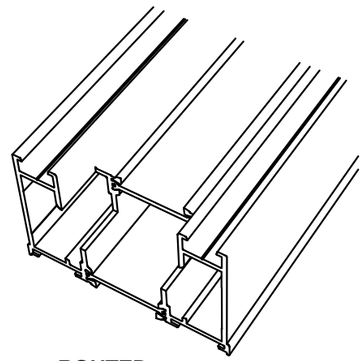

ROUTED

IF USING A ROUTER, THE BELOW PREP CAN BE USED IF PREFFERED

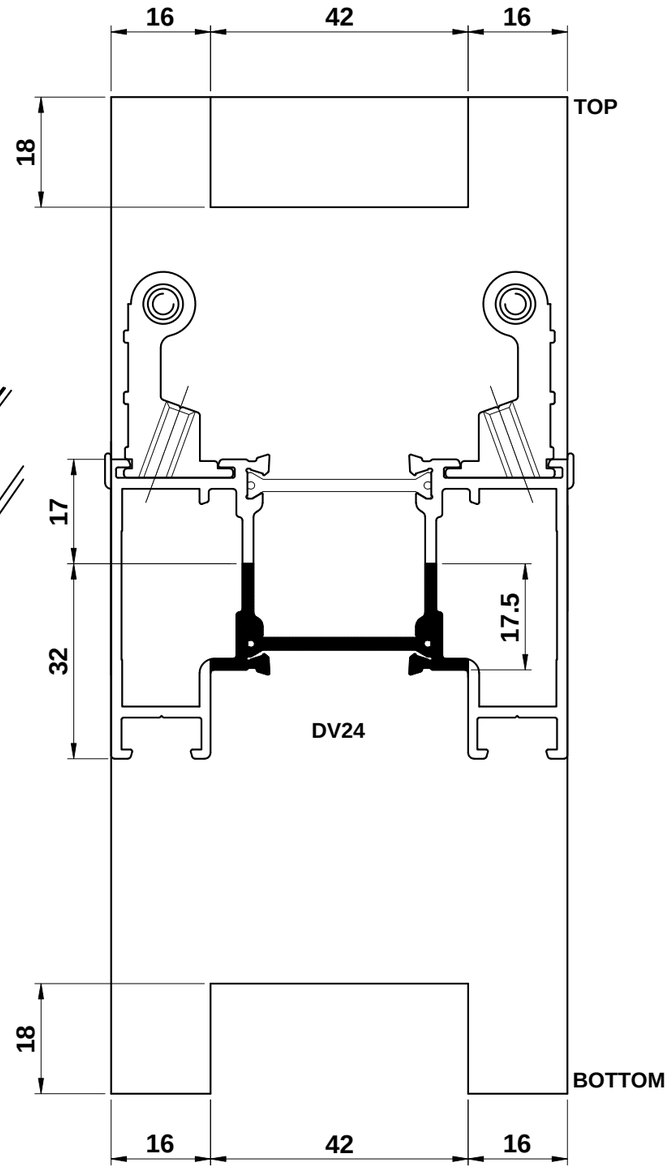

Do Not Scale From This Drawing

Open In - ACDV718/9 Preparation Locking into DV24 with ACDV251 Handle

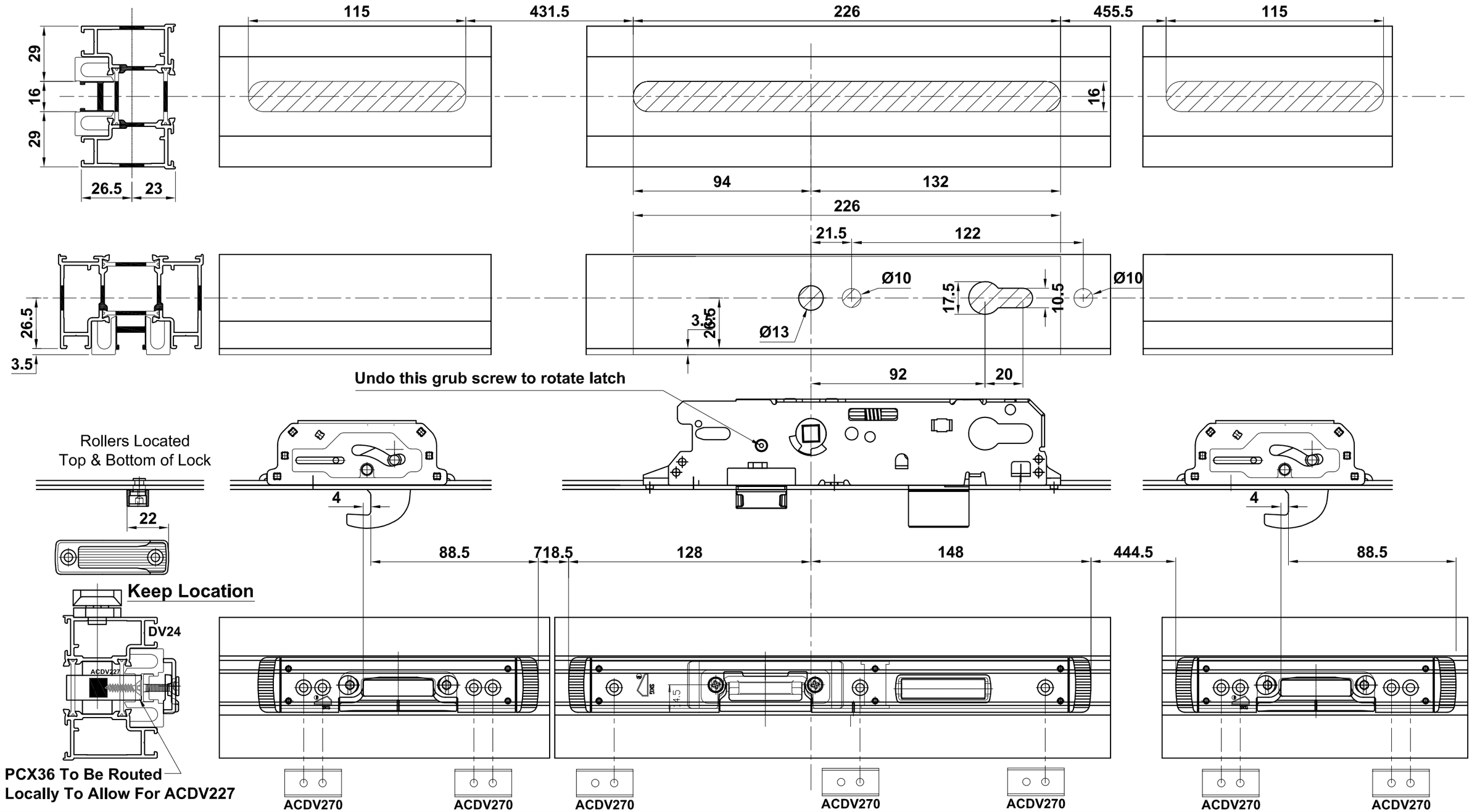

Do Not Scale From This Drawing

Open In - ACDV718/9 Preparation Locking into DV14with ACDV251 Handle

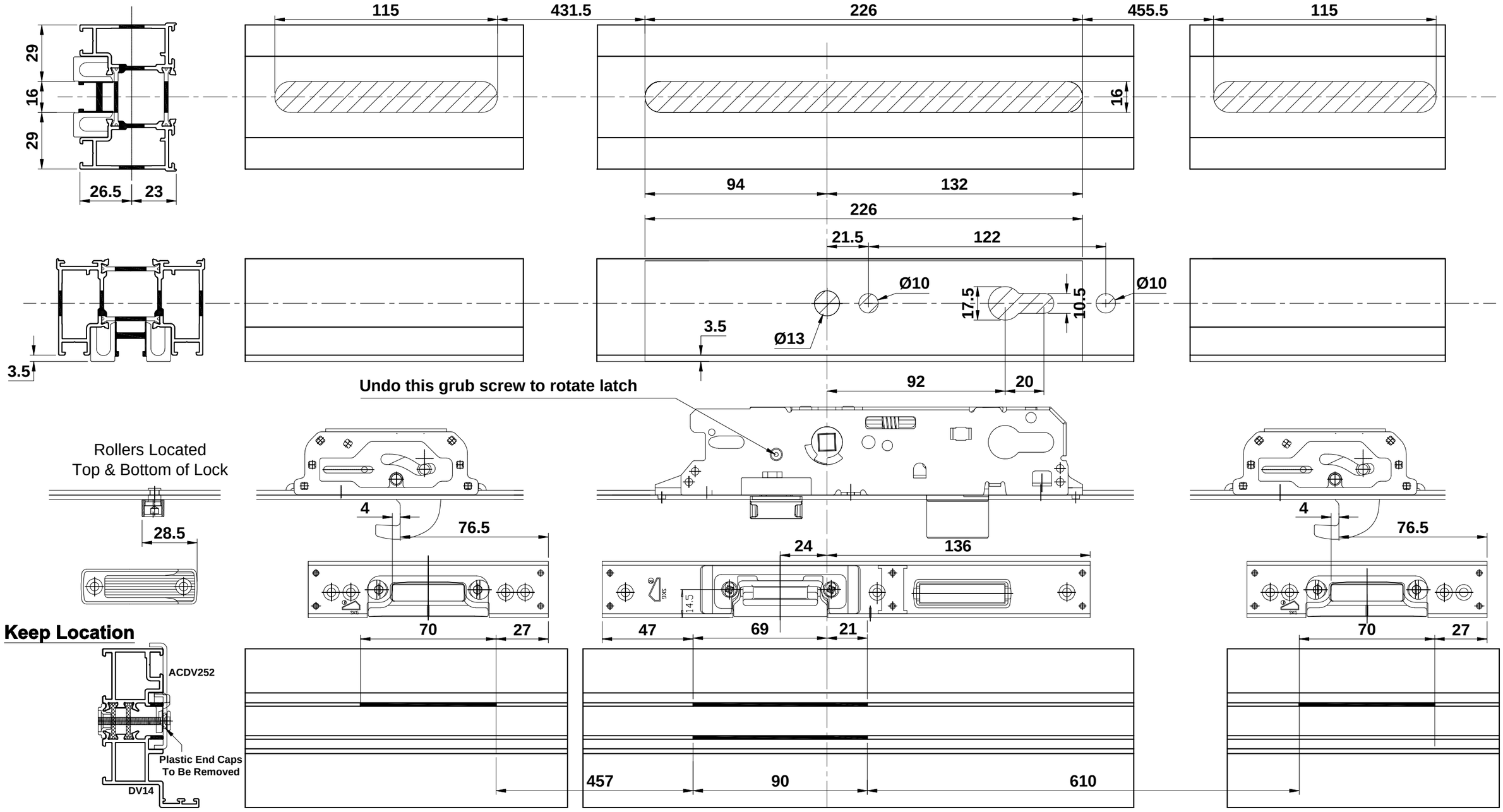

Do Not Scale From This Drawing

Open In - ACDV717 Preparation Locking into DV24

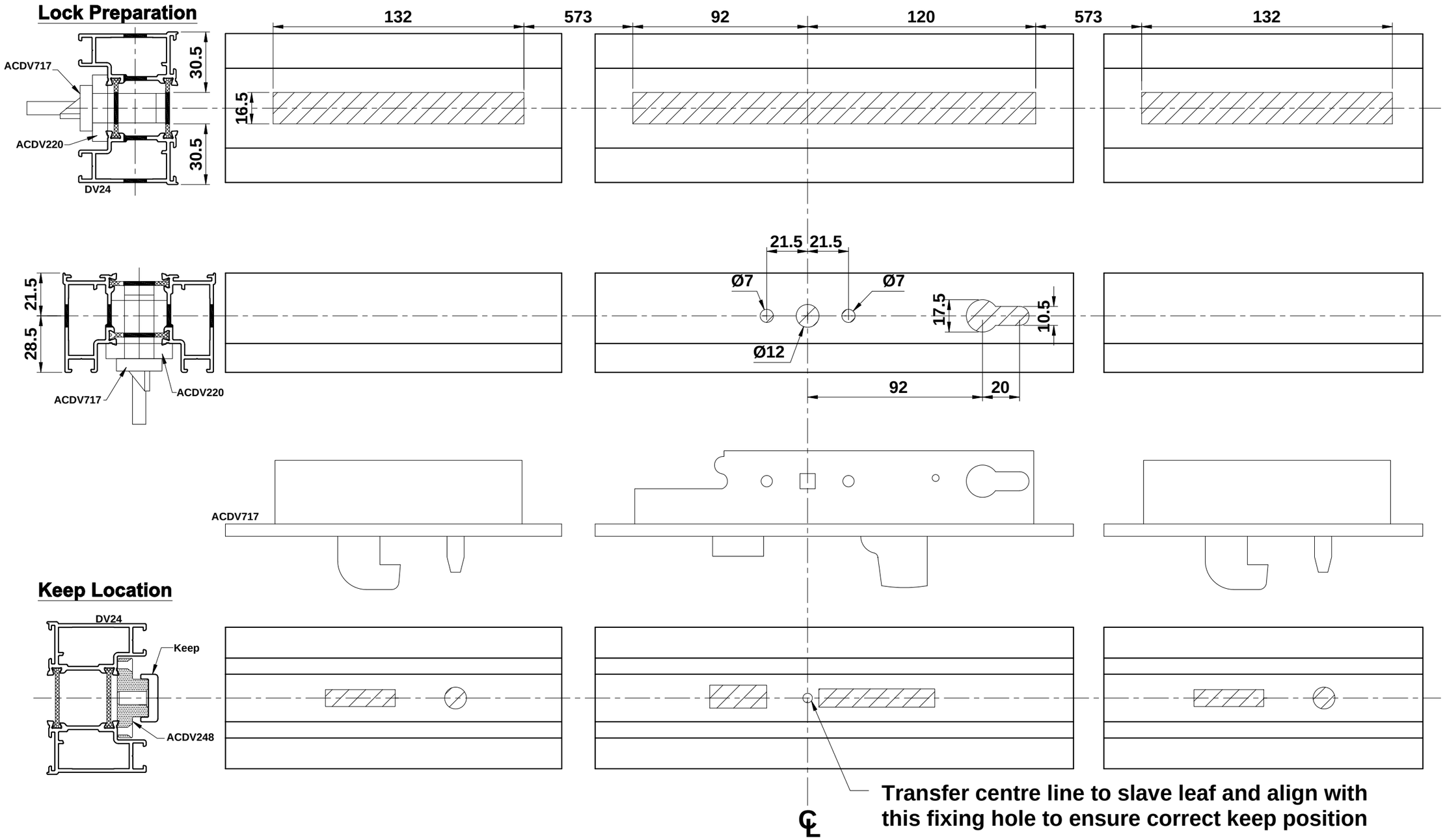

Do Not Scale From This Drawing

Open In - ACDV717 Preparation Locking into DV14

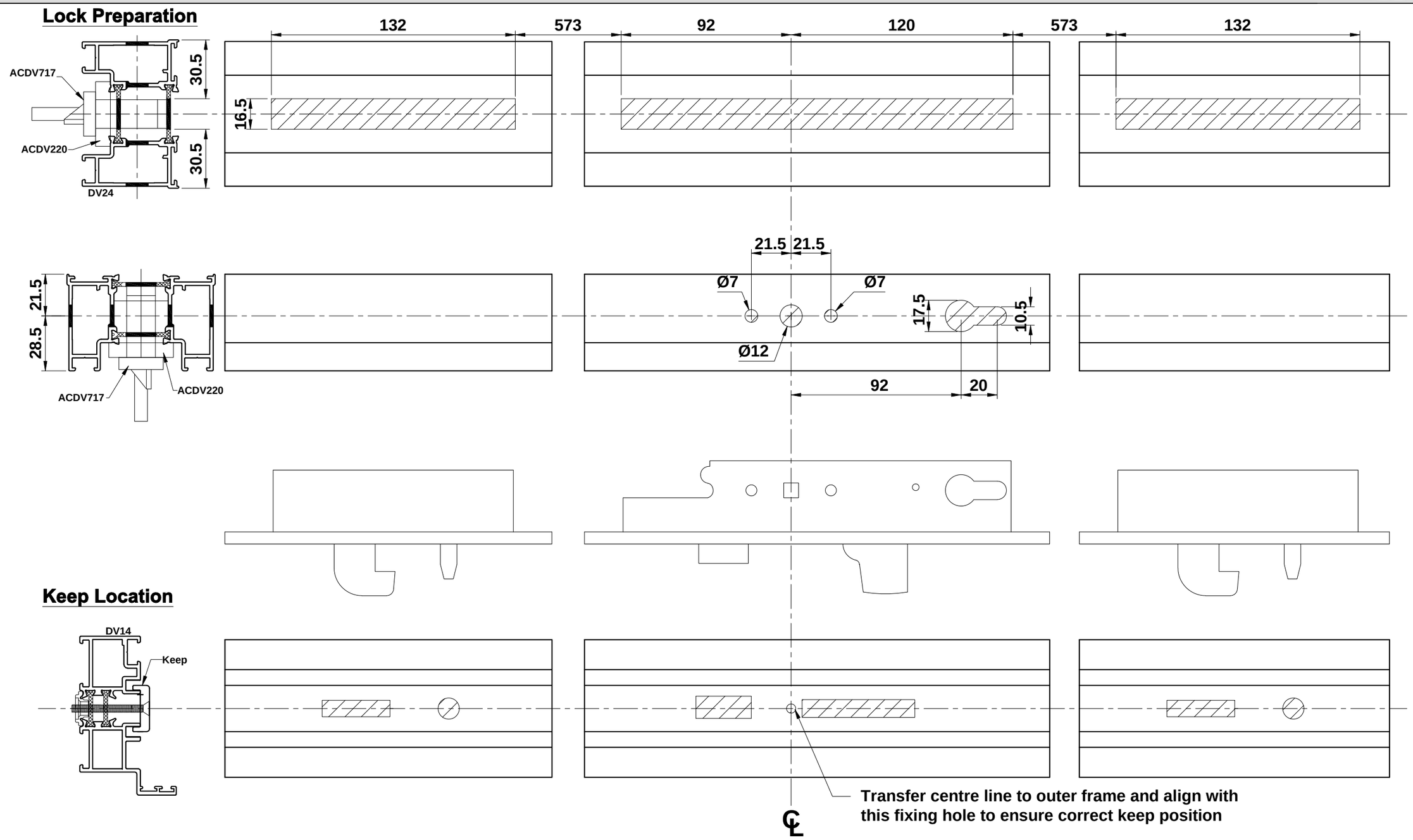

Do Not Scale From This Drawing

Open In - Shootbolt Preparation with DV14 Threshold

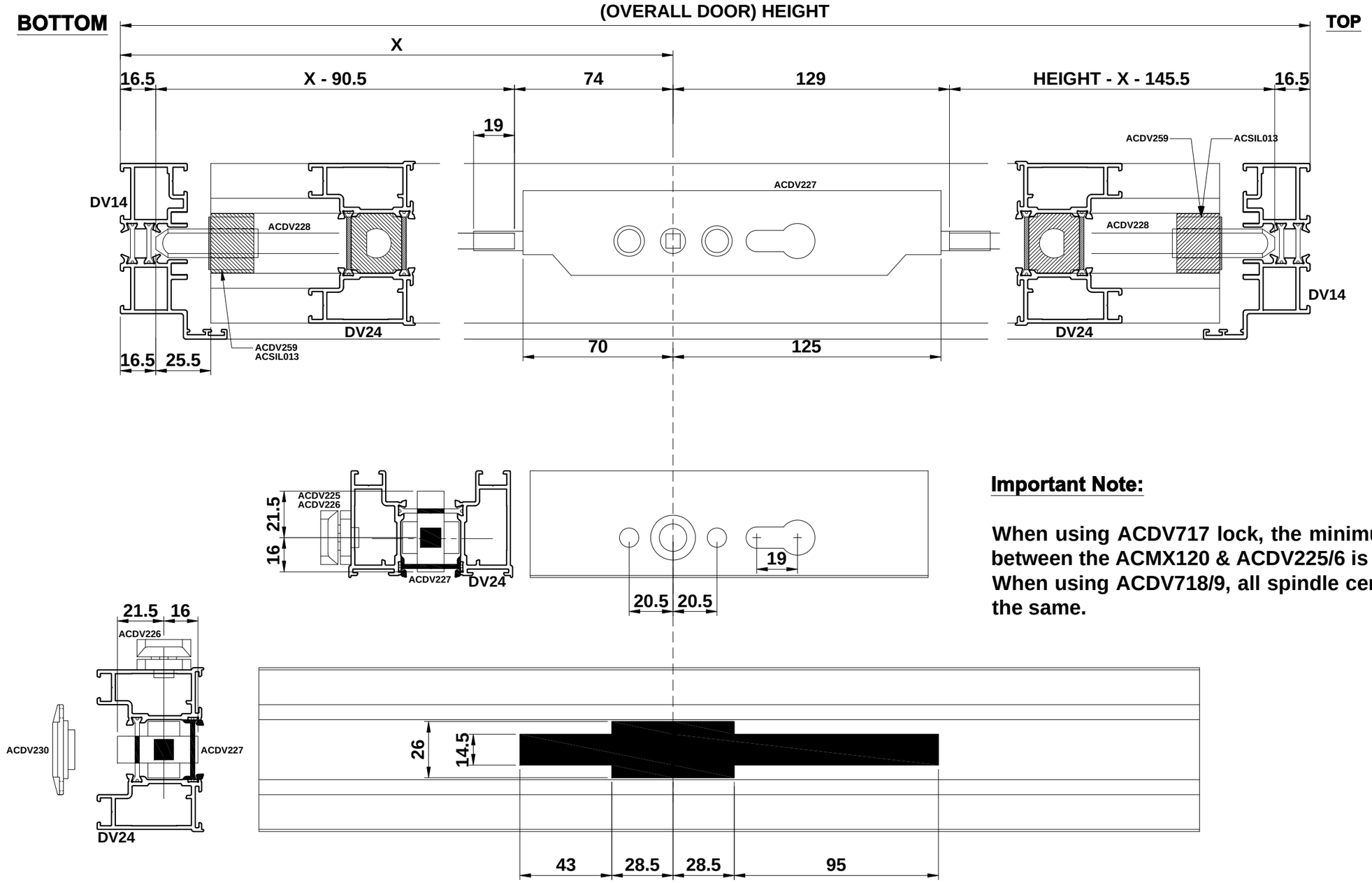

Important Note:

When using ACDV717 lock, the minimum distance between the ACMX120 & ACDV225/6 is 95mm.
When using ACDV718/9, all spindle centres can be the same.

Do Not Scale From This Drawing

Open In - Shootbolt Preparation with DV171 Threshold

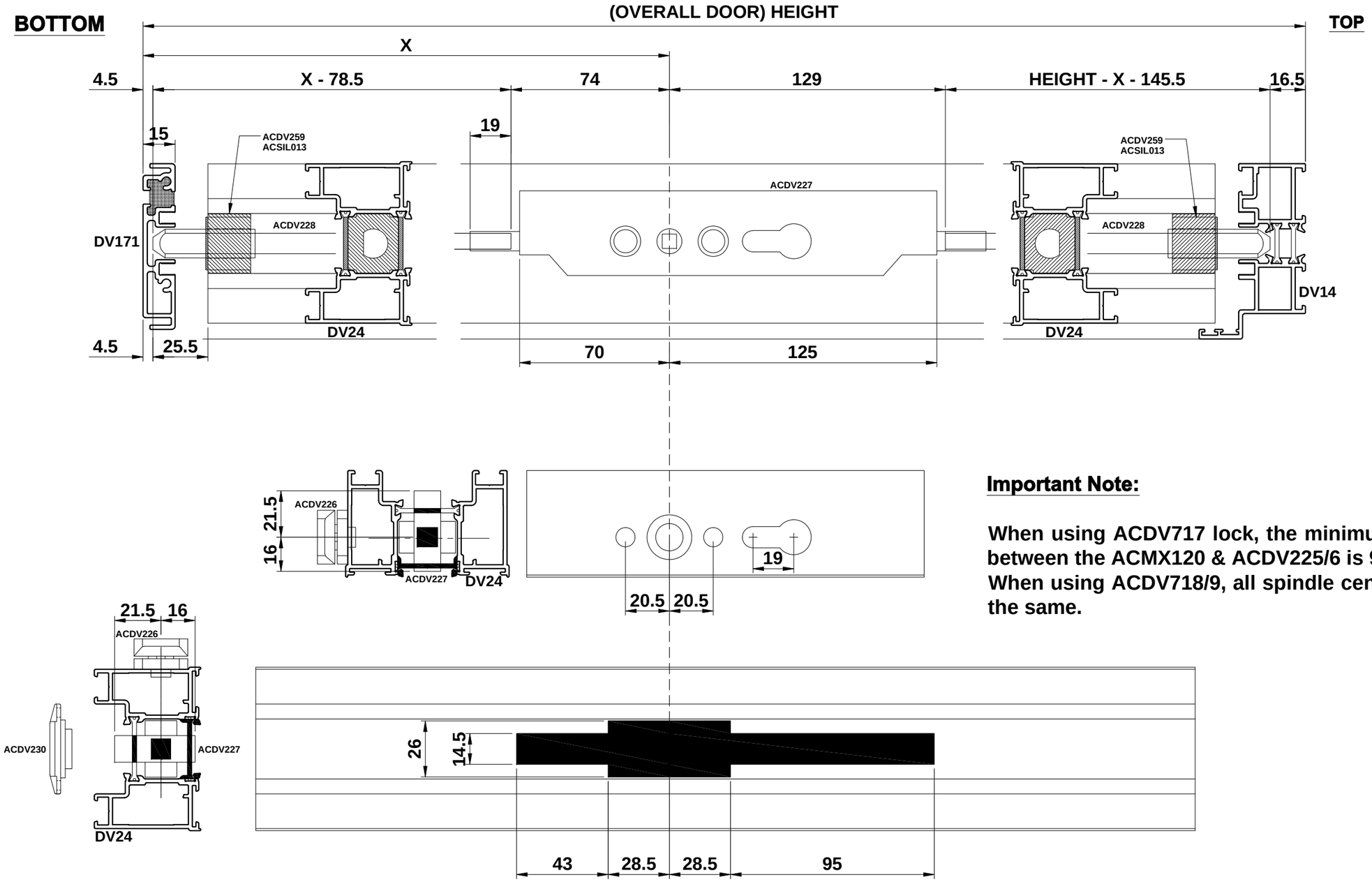

Important Note:

When using ACDV717 lock, the minimum distance between the ACMX120 & ACDV225/6 is 95mm.
When using ACDV718/9, all spindle centres can be the same.

Do Not Scale From This Drawing

Open In - Shootbolt Preparation with DV173 Threshold

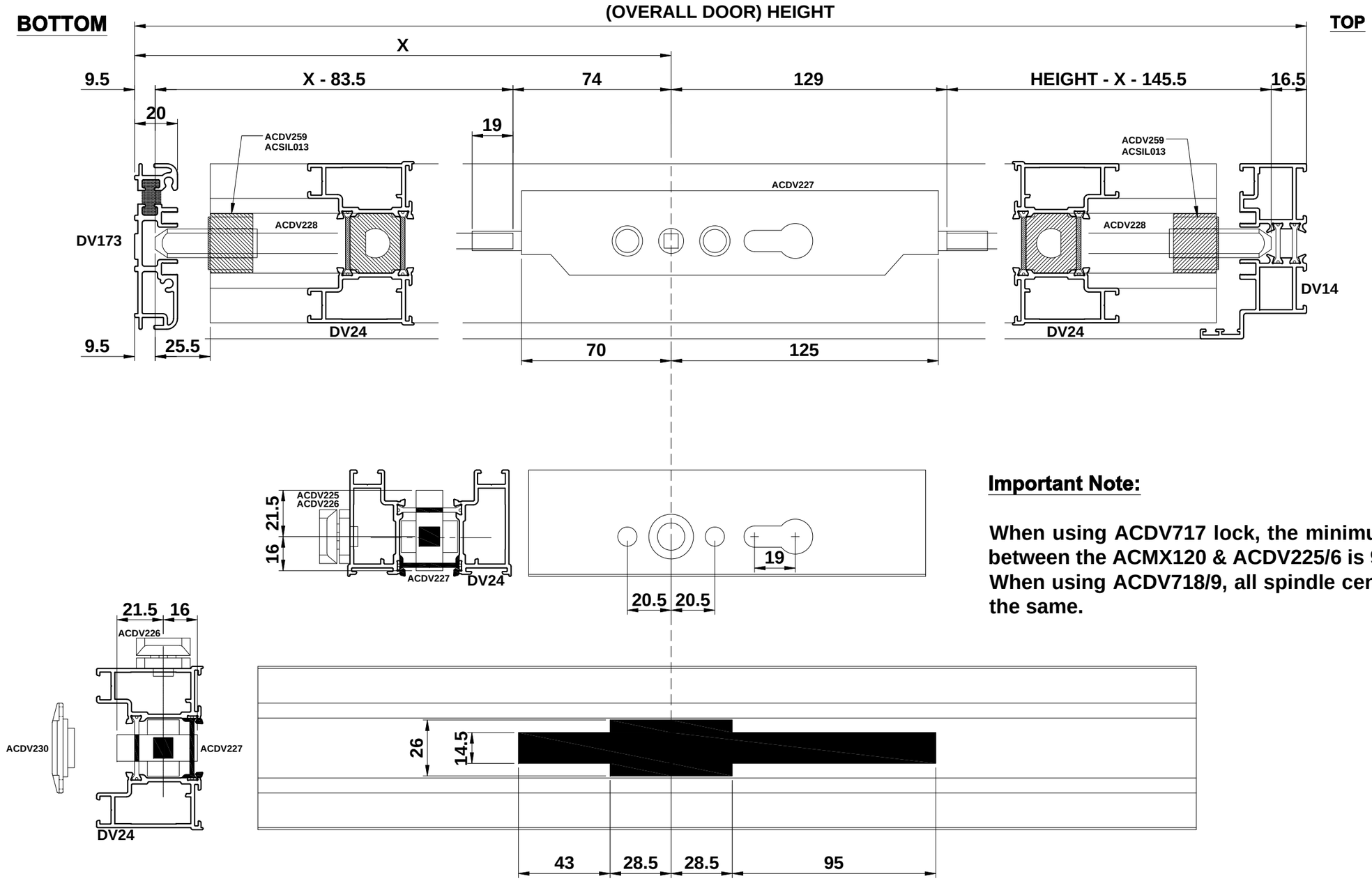

Important Note:

When using ACDV717 lock, the minimum distance between the ACMX120 & ACDV225/6 is 95mm.
When using ACDV718/9, all spindle centres can be the same.

Open In - Hinges

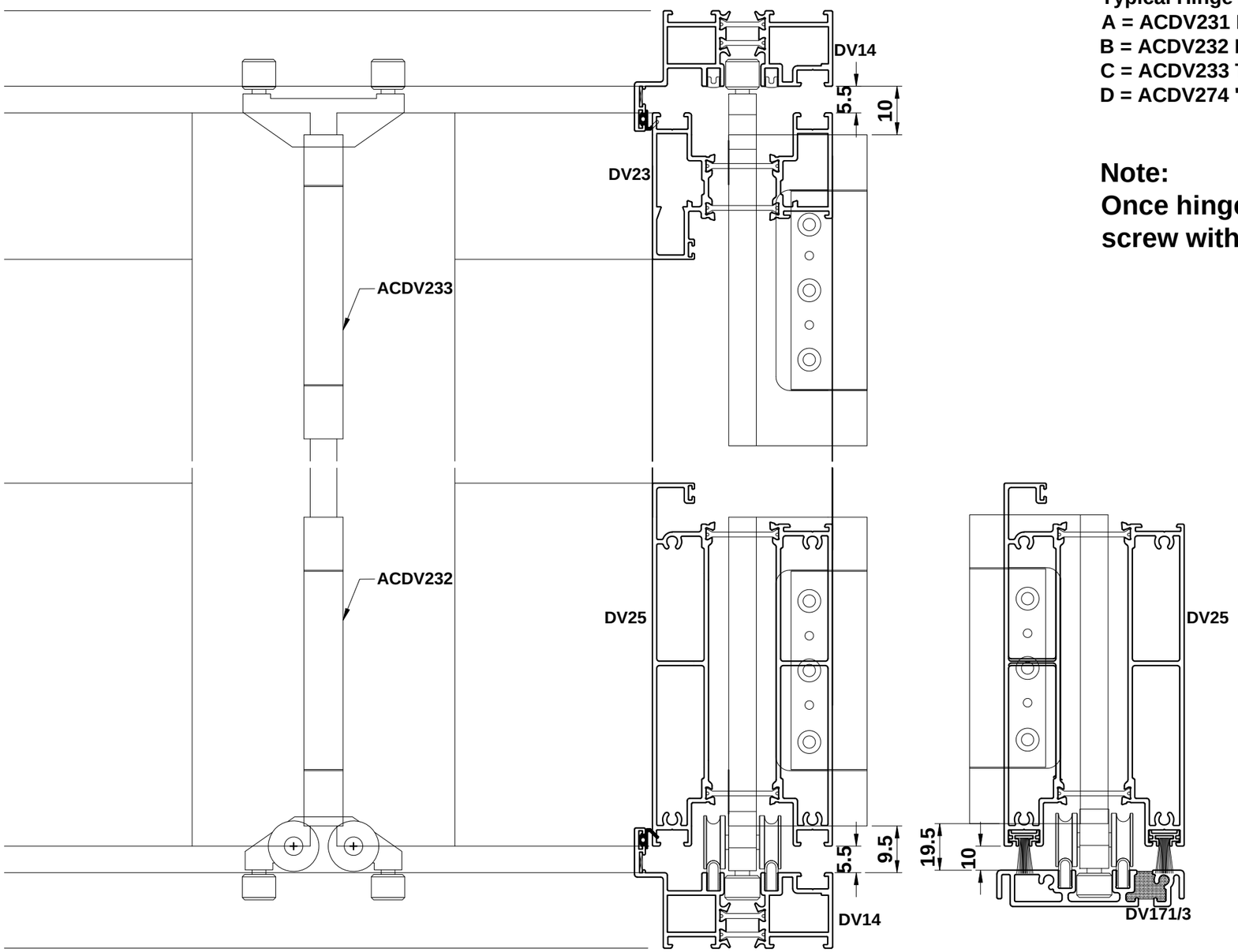

Typical Hinge Layout:
A = ACDV231 Intermediate Hinge
B = ACDV232 Bottom Roller Carrier
C = ACDV233 Top Guide Carrier
D = ACDV274 'D' Handle

Note:
Once hinges are set into position, replace centre machine screw with a self tapping screw for permanent fixing.

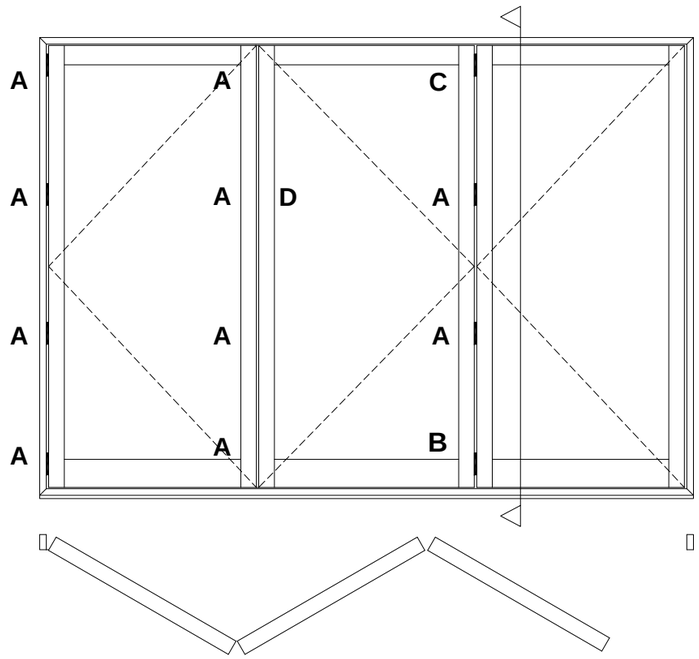

Open In - ACDV257 Locations

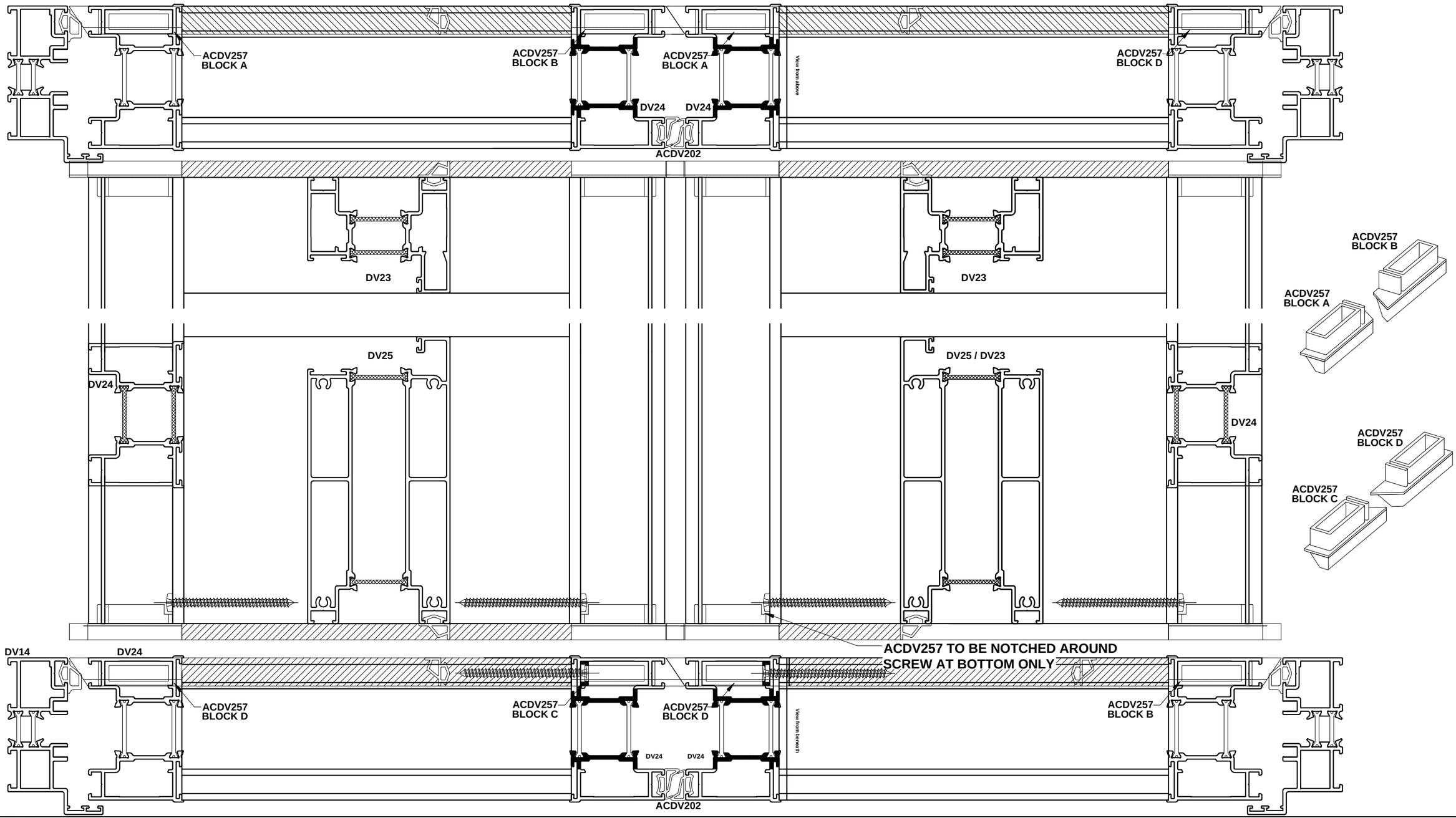

Open In - ACDV261 Positions

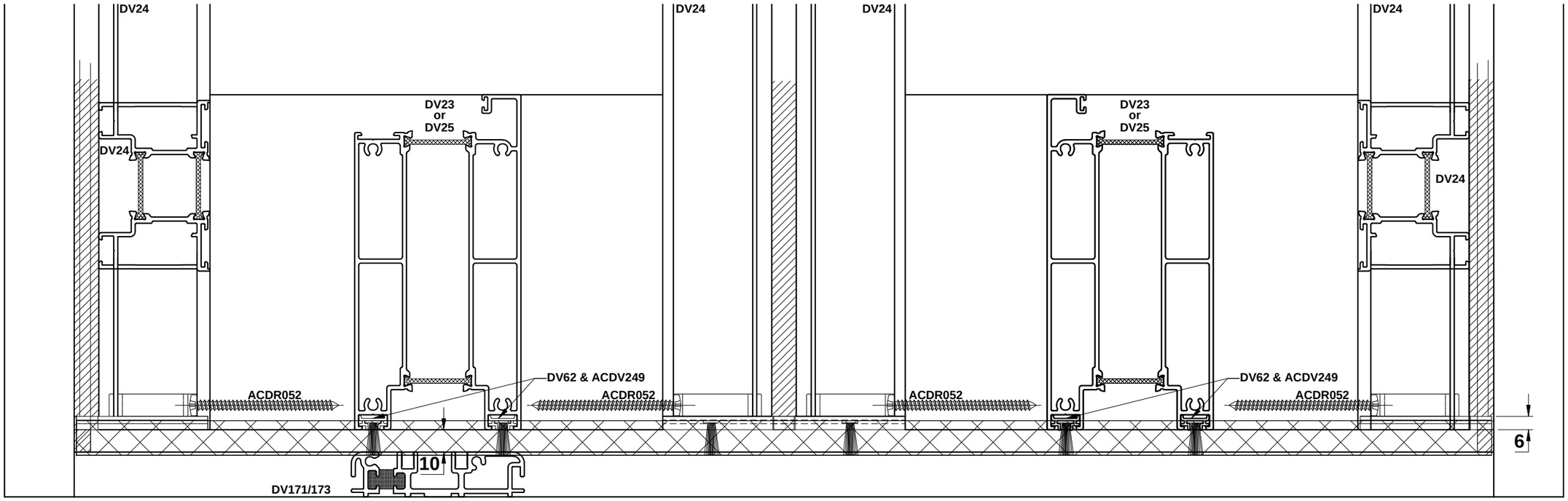

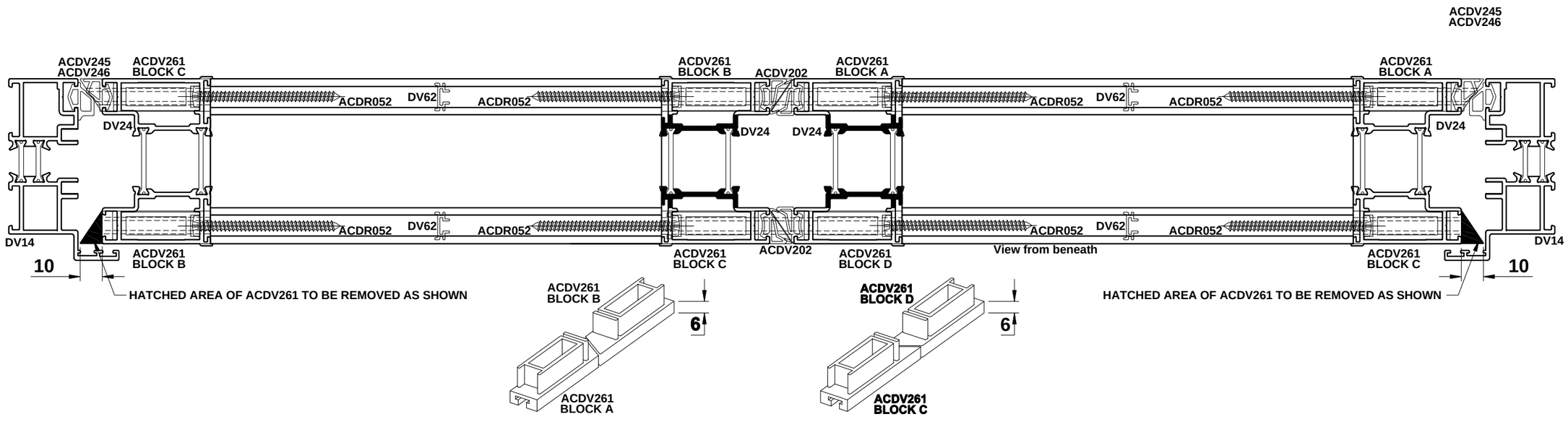

Open In - Beads & Glazing

INTERNALLY BEADED

NOTE: The last DV63 bead must be fitted as 3 pieces due to mitre

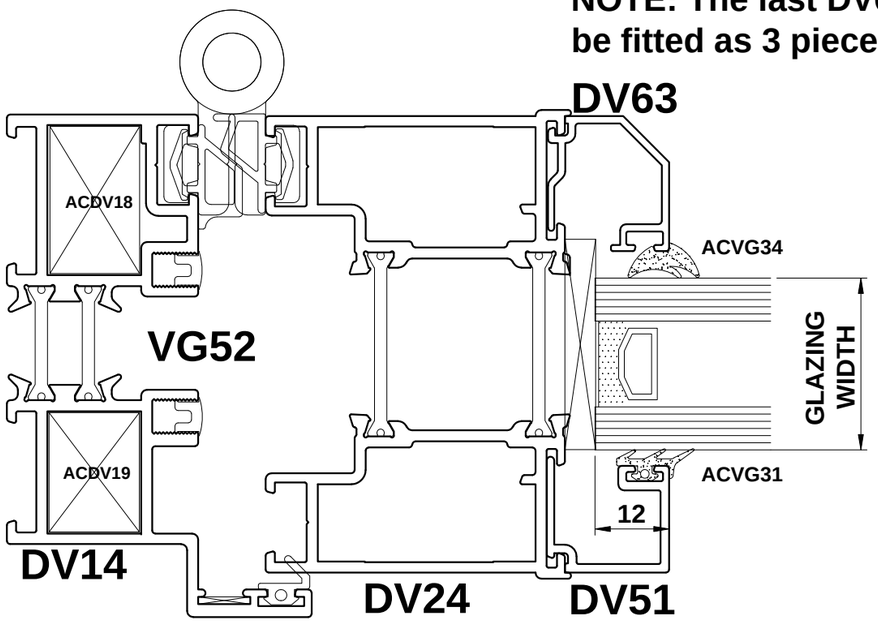

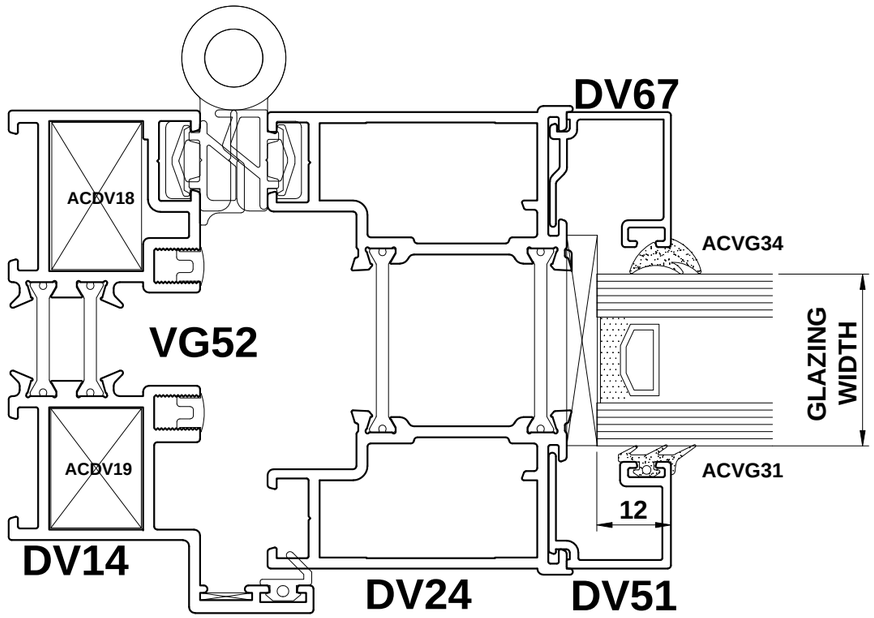

28mm Only	
BEADS	GASKET
DV63 DV67	Outside: ACVG31 3mm 'E' Gasket Inside: ACVG34 5mm Wedge Gasket

Open In - ACDV308

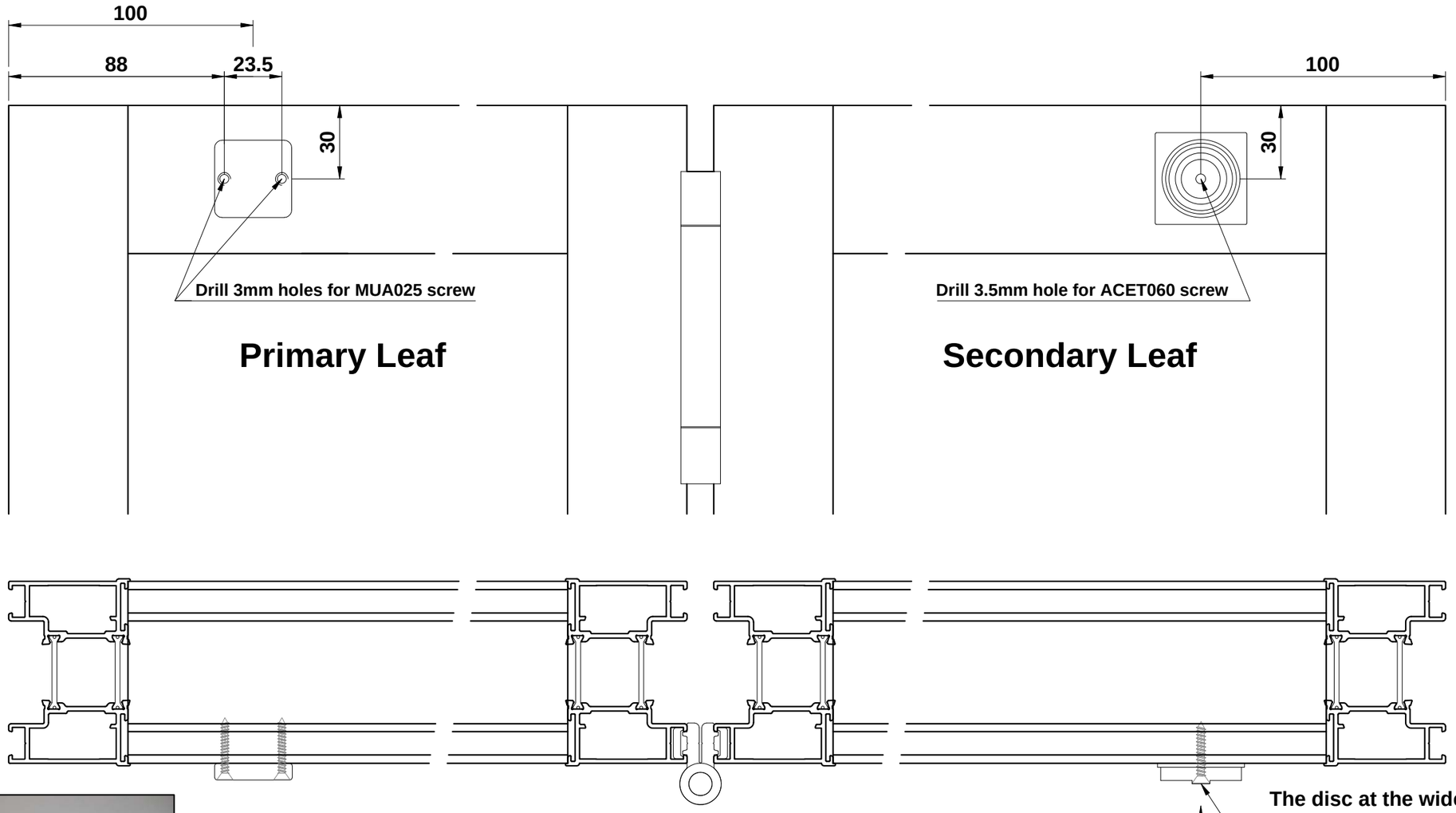

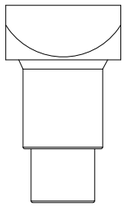

The disc at the wider end of the catch unscrews to allow fixing.

WARNING - the catch is SPRING LOADED, take care when removing from base plate and point in a safe direction

Section F

Section F

OPEN OUT

F03 - Type 2e With Rebated Threshold
F04 - Type 2e With Low Threshold
F05 - Type 2e With DV23 & Standard Threshold
F06 - Type 2e With DV23 & Low Threshold
F07 - Type 4e With Standard Threshold
F08 - Type 4e With Low Threshold
F09 - Type 4e With DV23 & Standard Threshold
F10 - Type 4e With DV23 & Low Threshold
F11 - Type 6e With Standard Threshold
F12 - Type 6e With Low Threshold
F13 - Type 6e With DV23 & Standard Threshold
F14 - Type 6e With DV23 & Low Threshold
F15 - Type 7e With Standard Threshold
F16 - Type 7e With Low Threshold
F17 - Type 7e With DV23 & Standard Threshold
F18 - Type 7e With DV23 & Low Threshold
F19 - Single Door With Standard Threshold
F20 - Single Door With Low Threshold
F21 - Single Door With DV23 & Standard Threshold
F22 - Single Door With DV23 & Low Threshold
F23 - Single Door With Standard Threshold
F24 - Single Door With Low Threshold
F25 - Single Door With DV23 & Standard Threshold
F26 - Single Door With DV23 & Low Threshold

OPEN IN

F27 - Type 2i With Rebated Threshold
F28 - Type 2i With Low Threshold
F29 - Type 2i With DV23 & Standard Threshold
F30 - Type 2i With DV23 & Low Threshold
F31 - Type 4i With Standard Threshold
F32 - Type 4i With Low Threshold
F33 - Type 4i With DV23 & Standard Threshold
F34 - Type 4i With DV23 & Low Threshold
F35 - Type 6i With Standard Threshold
F36 - Type 6i With Low Threshold
F37 - Type 6i With DV23 & Standard Threshold
F38 - Type 6i With DV23 & Low Threshold
F39 - Type 7i With Standard Threshold
F40 - Type 7i With Low Threshold
F41 - Type 7i With DV23 & Standard Threshold
F42 - Type 7i With DV23 & Low Threshold
F43 - Single Door With Standard Threshold
F44 - Single Door With Low Threshold
F45 - Single Door With DV23 & Standard Threshold
F46 - Single Door With DV23 & Low Threshold
F47 - Single Door With Standard Threshold
F48 - Single Door With Low Threshold
F49 - Single Door With DV23 & Standard Threshold
F50 - Single Door With DV23 & Low Threshold

Do Not Scale From This Drawing

Type 2e With Rebated Threshold - Open Out

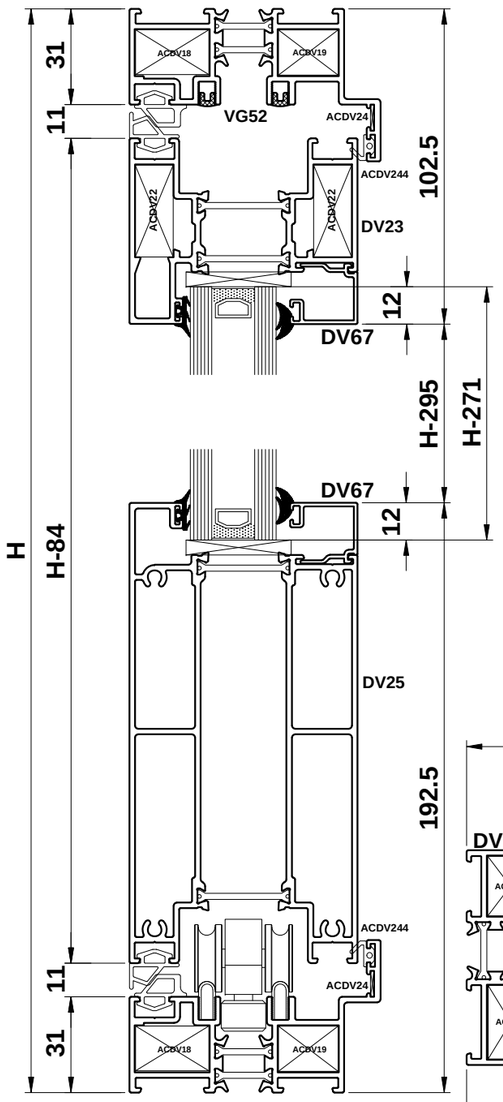

PROFILE CUTTING SCHEDULE

DV14		2		W	
DV14		2		H	
DV23		3		W/3-133.5	
DV24		6		H-84	
DV25		3		W/3-133.5	
DV51		6		H-295	
DV56		1		H-84	
DV63 or DV67	or	6		W/3-135	
DV63 or DV67	or	6		H-261	H-295
DV60		1		H-62	
VG52		2		W-62	
VG52		4		H-62	
VG53		2		W-62	
PCX36		1		H-84	

Note: PCX15 required for leaf heights over 2285mm.

GLASS SIZES		
3 X	W/3 - 142.5	
	H - 271	

ACCESSORIES

ACDV18	4	CLEAT FOR DV14
ACDV19	4	CLEAT FOR DV14
ACDV22	12	CLEAT FOR DV23
ACDV24	4	CHEVRON FOR DV14
ACDV244	2 x (W-90) + 2 x (H-90)	FLIPPER GASKET
ACDV245	2 x (W-62) + 1 x (H-62)	SEALING GASKET
ACDV202	8 x (H-84)	SEALING GASKET
ACDV246	2 x (W-62) + 1 x (H-62)	SEALING GASKET
ACDV225 or 226	1	SHOOTBOLT HANDLE
ACDV227	1	SHOOTBOLT GEARBOX
ACDV228	1 (PAIR)	SHOOTBOLT ROD
ACDV259	1 (PAIR)	SHOOTBOLT GUIDE
ACDV230	1	SHOOTBOLT COVER
ACDV231	9	INTERMEDIATE HINGE
ACDV232	1	BOTTOM ROLLER HINGE
ACDV233	1	TOP GUIDE HINGE
ACDV234	1	D-HANDLE/HINGE
ACDV718/9	1	MULTI-POINT LOCK
ACDV251	1 (PAIR)	LEVER HANDLES
ACDV56	1 (PAIR)	END CAP FOR DV56
ACDV252	1	KEEP GUIDE
ACDV257	3 (SET OF 4)	INFILL BLOCK
ACMX01603 (SL)	1	HALF CYLINDER
ACDV258 (SL)	1	50/50 CYLINDER
ACET131	2	DRAIN HOLE COVER
ACDV264	11	SCREW FOR KEEPS
ACDV265	11	SCREW FOR LOCK
ACSG023	11	FIXING BLOCK FOR KEEPS
ACDV241	11	FIXING BLOCK FOR LOCK
ACET060	2	SCREW FOR ACDV252
ACET067	11	SCREW FOR DV56
ACET069	14	SCREW FOR ACDV225/6 & DV23

ACDR052	24	SCREW FOR DV25
ACVG31	6 x (W/3-142) + 6 x (H-272)	EXTERNAL GLAZING GASKET
ACVG34	6 x (W/3-142) + 6 x (H-272)	INTERNAL GLAZING GASKET
ACVL032	1 x (H-67)	DV56 FLIPPER GASKET

Type 2e

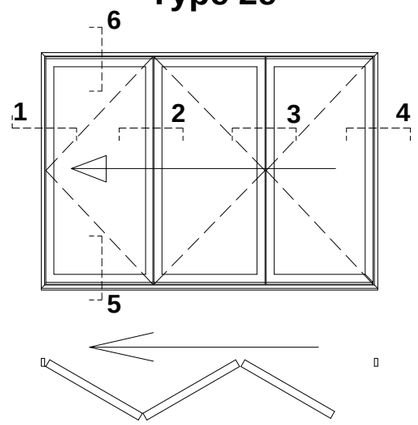

IMPORTANT NOTE:
Min. Sash Width 700mm / Max. Vent Width 1000mm
Max. Sash Weight 100kg
Max. Sash Height 2400mm Dependant On Site Conditions
Always Measure In the Last Vent.

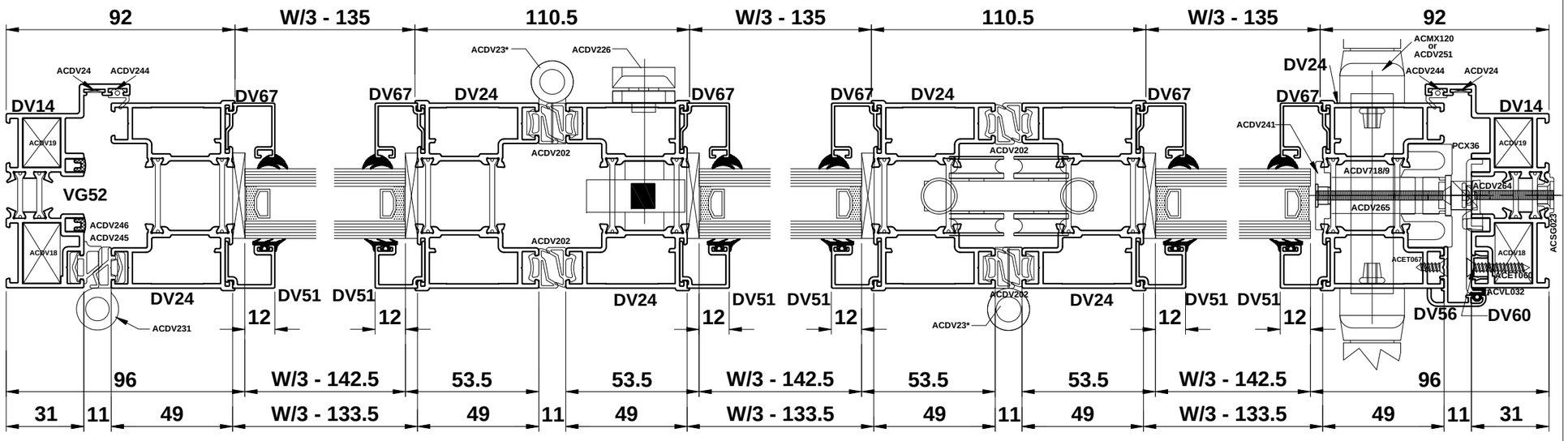

Do Not Scale From This Drawing

Visofold 2000

Type 2e With Low Threshold - Open Out

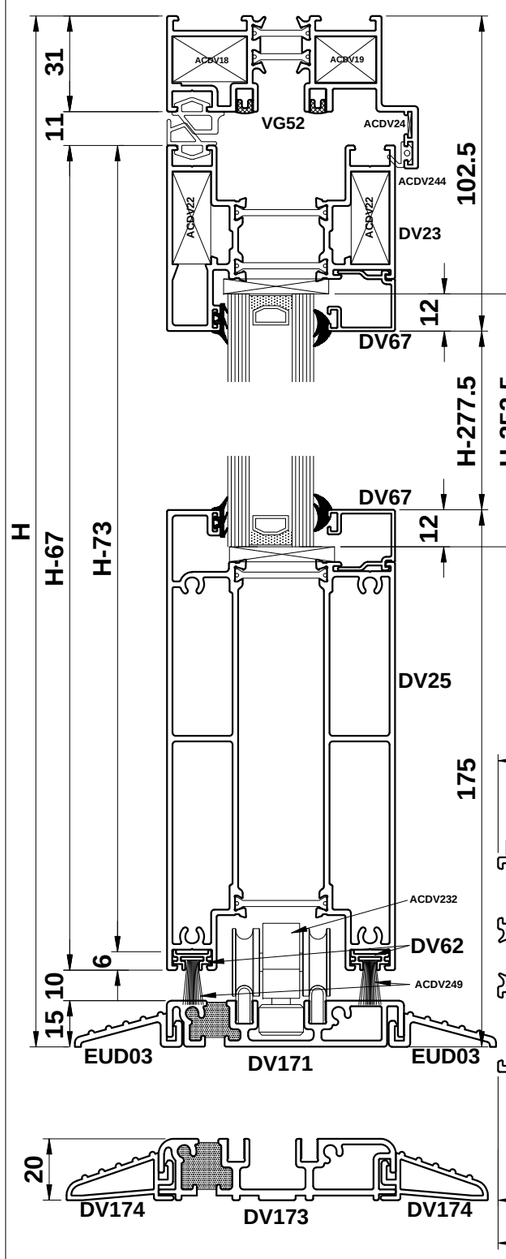

PROFILE CUTTING SCHEDULE (DV171)

DV14		1		W	
DV14		2		H	
DV171		1		W-66	
EUD03		1		W-66	
EUD03		1		W-99	
DV23		3		W/3-133.5	
DV24		6		H-73	
DV25		3		W/3-133.5	
DV51		6		H-278	
DV56		1		H-73	
DV63 or DV67	or	6		W/3-135	
DV63 or DV67	or	6		H-244	H-278
DV60		1		H-46	
DV62		6		W/3-133.5	
VG52		2		W-62	
VG52		4		H-42	
VG53		2		W-66	
PCX36		1		H-73	

PROFILE CUTTING SCHEDULE (DV173)

DV173		1		W-66	
DV174		1		W-66	
DV174		1		W-99	
DV24		6		H-78	
DV51		6		H-283	
DV56		1		H-78	
DV63 or DV67	or	6		H-249	H-283
DV60		1		H-51	
PCX36		1		H-78	

Note: PCX15 required for leaf heights over 2285mm.

ACCESSORIES

ACDV18	2	CLEAT FOR DV14
ACDV19	2	CLEAT FOR DV14
ACDV22	12	CLEAT FOR DV23
ACDV24	2	CHEVRON FOR DV14
ACDV244	1 x (W-90) + 2 x (H-60)	FLIPPER GASKET
ACDV245	1 x (W-62) + 1 x (H-46)	SEALING GASKET
ACDV202	8 x (H-67)	SEALING GASKET
ACDV246	1 x (W-62) + 1 x (H-46)	SEALING GASKET
ACDV225 or 226	1	SHOOTBOLT HANDLE
ACDV227	1	SHOOTBOLT GEARBOX
ACDV228	1 (PAIR)	SHOOTBOLT ROD
ACDV259	1 (PAIR)	SHOOTBOLT GUIDE
ACDV230	1	SHOOTBOLT COVER
ACDV231	9	INTERMEDIATE HINGE
ACDV232	1	BOTTOM ROLLER HINGE
ACDV233	1	TOP GUIDE HINGE
ACDV234	1	D-HANDLE/HINGE
ACDV718/9	1	MULTI-POINT LOCK
ACDV251	1 (PAIR)	LEVER HANDLES
ACDV56	1 (PAIR)	END CAP FOR DV56
ACDV252	1	KEEP GUIDE
ACMX01603 (SL)	1	HALF CYLINDER
ACDV171/173	2	END CAPS FOR DV171/173
ACDV258 (SL)	1	50/50 CYLINDER
ACDV264	11	SCREW FOR KEEP
ACDV265	11	SCREW FOR LOCK
ACSG023	11	FIXING BLOCK FOR KEEPS
ACET060	2	SCREW FOR ACDV252
ACDV241	11	FIXING BLOCK FOR LOCK
ACET067	11	SCREW FOR DV56
ACET069	14	SCREW FOR ACDV225/6 & DV23

IMPORTANT NOTE:
Min. Sash Width 700mm / Max. Vent Width 1000mm
Max. Sash Weight 100kg
Max. Sash Height 2400mm Dependant On Site Conditions
Always Measure In the Last Vent.

ACDR052	28	SCREW FOR DV25 & DV171/3
ACDV257	2 (SET OF 4)	INFILL BLOCK
ACVG31	6 x (W/3-142) + 6 x (H-254)	EXTERNAL GLAZING GASKET
ACVG34	6 x (W/3-142) + 6 x (H-254)	INTERNAL GLAZING GASKET
ACDV249	6 x (W/3-35.5)	WOOLPILE
ACVL032	1 x (H-67)	DV56 FLIPPER GASKET
ACDV261	3 (SET OF 4)	INFILL BLOCK

Type 2e

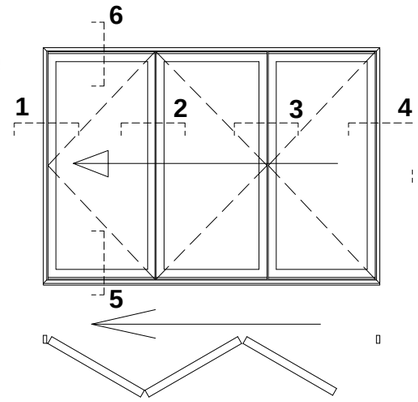

GLASS DEDUCTIONS

DV171	3 x	W/3 - 142.5	H - 254
DV173	3 x	W/3 - 142.5	H - 259

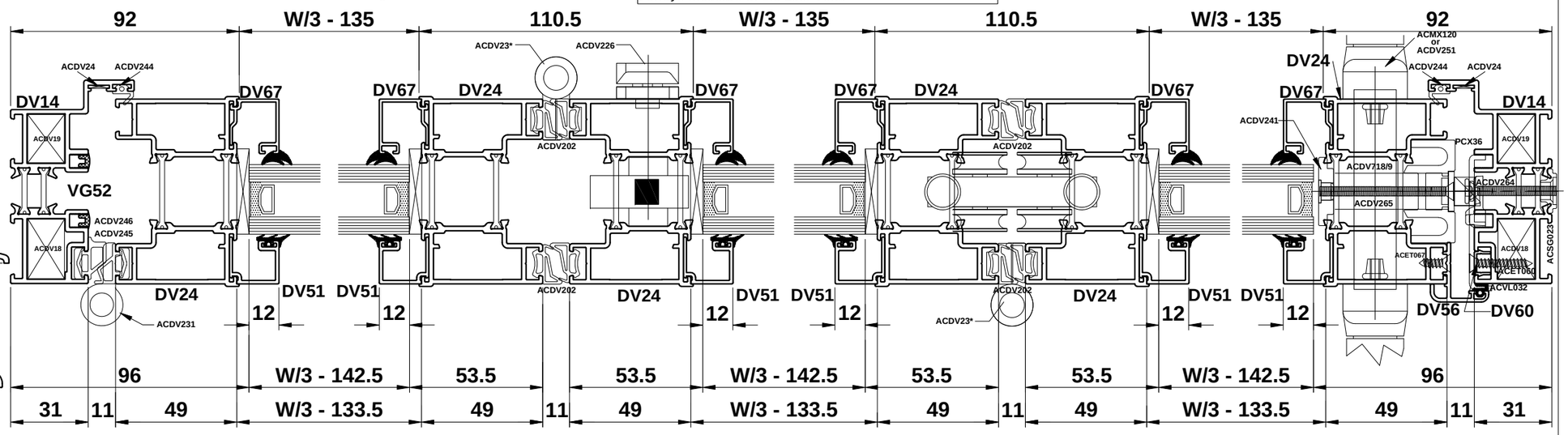

Do Not Scale From This Drawing

Type 2e With DV23 & Standard Threshold - Open Out

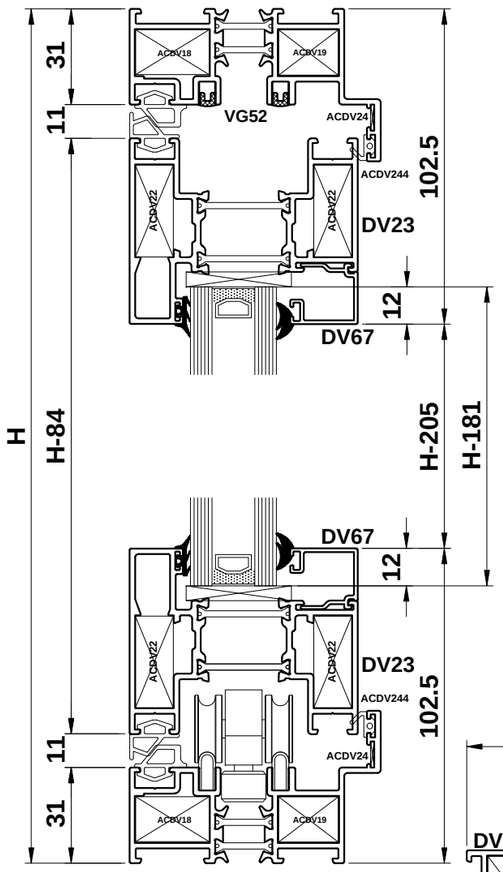

PROFILE CUTTING SCHEDULE

DV14		2		W	
DV14		2		H	
DV23		6		W/3-133.5	
DV24		6		H-84	
DV51		6		H-295.5	
DV56		1		H-84	
DV63 or DV67	or	6		W/3-135	
DV63 or DV67	or	6		H-239	H-205
DV60		1		H-62	
VG52		2		W-62	
VG52		4		H-62	
VG53		2		W-62	
PCX36		1		H-84	

Note: PCX15 required for leaf heights over 2285mm.

GLASS SIZES	3 X	W/3 - 142.5
		H - 181

ACCESSORIES

ACDV18	4	CLEAT FOR DV14
ACDV19	4	CLEAT FOR DV14
ACDV22	24	CLEAT FOR DV23
ACDV24	4	CHEVRON FOR DV14
ACDV244	2 x (W-90) + 2 x (H-90)	FLIPPER GASKET
ACDV245	2 x (W-62) + 1 x (H-62)	SEALING GASKET
ACDV202	8 x (H-84)	SEALING GASKET
ACDV246	2 x (W-62) + 1 x (H-62)	SEALING GASKET
ACDV225 or 226	1	SHOOTBOLT HANDLE
ACDV227	1	SHOOTBOLT GEARBOX
ACDV228	1 (PAIR)	SHOOTBOLT ROD
ACDV259	1 (PAIR)	SHOOTBOLT GUIDE
ACDV230	1	SHOOTBOLT COVER
ACDV231	9	INTERMEDIATE HINGE
ACDV232	1	BOTTOM ROLLER HINGE
ACDV233	1	TOP GUIDE HINGE
ACDV234	1	D-HANDLE/HINGE
ACDV718/9	1	MULTI-POINT LOCK
ACDV251	1 (PAIR)	LEVER HANDLES
ACDV56	1 (PAIR)	END CAP FOR DV56
ACDV252	1	KEEP GUIDE
ACDV257	3 (SET OF 4)	INFILL BLOCK
ACMX01603 (SL)	1	HALF CYLINDER
ACDV258 (SL)	1	CYLINDER
ACET060	2	SCREW FOR ACDV252
ACDV241	11	FIXING BLOCK FOR LOCK
ACET067	11	SCREW FOR DV56
ACET069	26	SCREW FOR ACDV225/6 & DV23
ACDV264	11	SCREW FOR KEEPS
ACDV265	11	SCREW FOR LOCK

ACSG023	11	FIXING PLATE FOR KEEP
ACVG31	6 x (W/3-142) + 6 x (H-181)	EXTERNAL GLAZING GASKET
ACVG34	6 x (W/3-142) + 6 x (H-181)	INTERNAL GLAZING GASKET
ACVL032	1 x (H-67)	DV56 FLIPPER GASKET

Type 2e

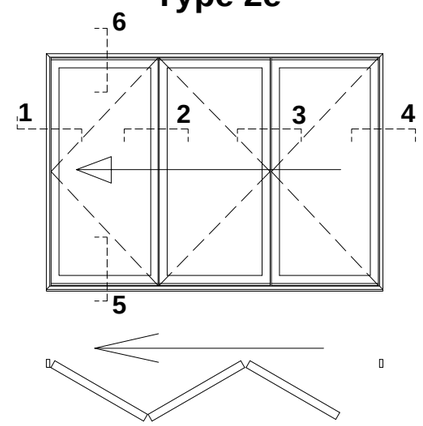

IMPORTANT NOTE:
Min. Sash Width 700mm / Max. Vent Width 1000mm
Max. Sash Weight 100kg
Max. Sash Height 2400mm Dependant On Site Conditions
Always Measure In the Last Vent.

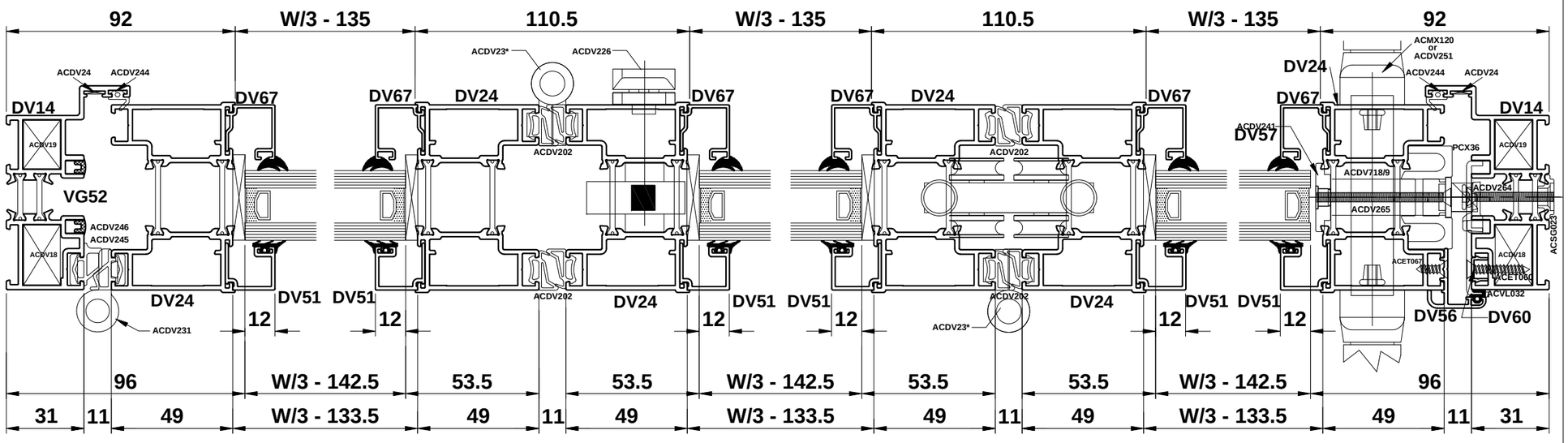

Do Not Scale From This Drawing

Type 2e With DV23 & Low Threshold - Open Out

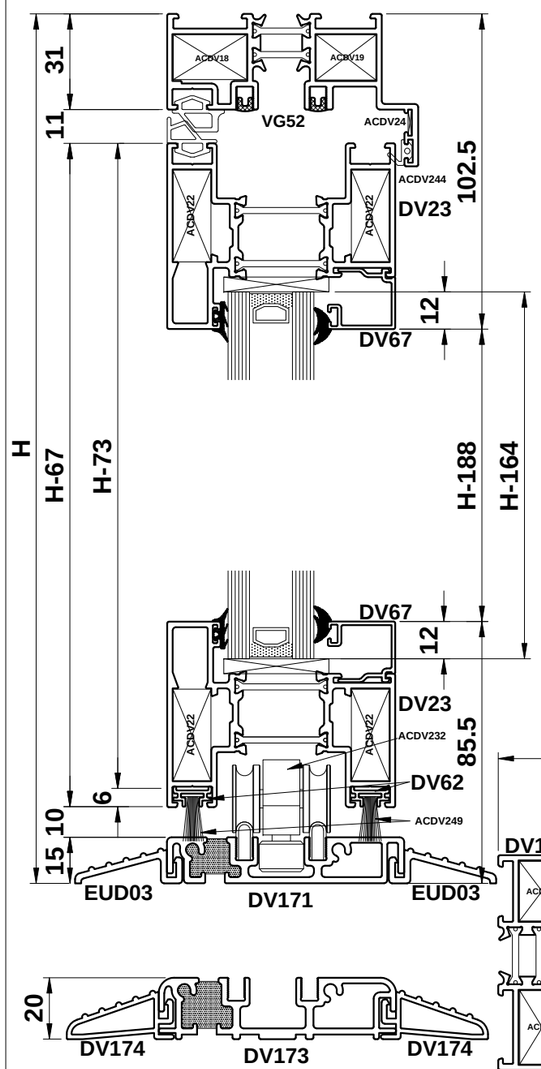

PROFILE CUTTING SCHEDULE (DV171)

DV14		1		W
DV14		2		H
DV171		1		W-66
EUD03		1		W-66
EUD03		1		W-99
DV23		6		W/3-133.5
DV24		6		H-73
DV51		6		H-278
DV56		1		H-73
DV63 or DV67	or	6		W/3-135
DV63 or DV67	or	6		H-244 H-278
DV60		1		H-46
DV62		6		W/3-133.5
VG52		2		W-62
VG52		4		H-42
VG53		2		W-66
PCX36		1		H-73

PROFILE CUTTING SCHEDULE (DV173)

DV173		1		W-66
DV174		1		W-66
DV174		1		W-99
DV24		6		H-78
DV51		6		H-188
DV56		1		H-72
DV63 or DV67	or	6		H-222 H-188
DV60		1		H-51
PCX36		1		H-78

Note: PCX15 required for leaf heights over 2285mm.

ACCESSORIES

ACDV18	2	CLEAT FOR DV14
ACDV19	2	CLEAT FOR DV14
ACDV22	24	CLEAT FOR DV23
ACDV24	2	CHEVRON FOR DV14
ACDV244	1 x (W-90) + 2 x (H-60)	FLIPPER GASKET
ACDV245	1 x (W-62) + 1 x (H-46)	SEALING GASKET
ACDV202	8 x (H-67)	SEALING GASKET
ACDV246	1 x (W-62) + 1 x (H-46)	SEALING GASKET
ACDV225 or 226	1	SHOOTBOLT HANDLE
ACDV227	1	SHOOTBOLT GEARBOX
ACDV228	1 (PAIR)	SHOOTBOLT ROD
ACDV259	1 (PAIR)	SHOOTBOLT GUIDE
ACDV230	1	SHOOTBOLT COVER
ACDV231	9	INTERMEDIATE HINGE
ACDV232	1	BOTTOM ROLLER HINGE
ACDV233	1	TOP GUIDE HINGE
ACDV234	1	D-HANDLE/HINGE
ACDV718/9	1	MULTI-POINT LOCK
ACDV251	1 (PAIR)	LEVER HANDLES
ACDV56	1 (PAIR)	END CAP FOR DV56
ACDV252	1	KEEP GUIDE
ACDV257	4 (SET OF 4)	INFILL BLOCK
ACDV171/173	1 (PAIR)	END CAPS FOR DV171/173
ACMX01603 (SL)	1	HALF CYLINDER
ACDV258 (SL)	1	CYLINDER
ACET060	2	SCREW FOR ACDV252
ACDV264	11	SCREW FOR KEEPS
ACDV265	11	SCREW FOR LOCK
ACDV241	11	FIXING BLOCK FOR LOCK
ACET067	11	SCREW FOR DV56

IMPORTANT NOTE:
Min. Sash Width 700mm / Max. Vent Width 1000mm
Max. Sash Weight 100kg
Max. Sash Height 2400mm Dependant On Site Conditions
Always Measure In the Last Vent.

ACDR052	4	SCREW FOR DV25 & DV171
ACET069	26	SCREW FOR ACDV225/6 & DV23
ACVG31	6 x (W/3-142) + 6 x (H-164)	EXTERNAL GLAZING GASKET
ACVG34	6 x (W/3-142) + 6 x (H-164)	INTERNAL GLAZING GASKET
ACDV249	6 x (W/3-35.5)	WOOLPILE
ACVL032	1 x (H-67)	DV56 FLIPPER GASKET
ACDV261	3 (SET OF 4)	INFILL BLOCK
ACSG023	11	FIXING PLATE FOR KEEP

Type 2e

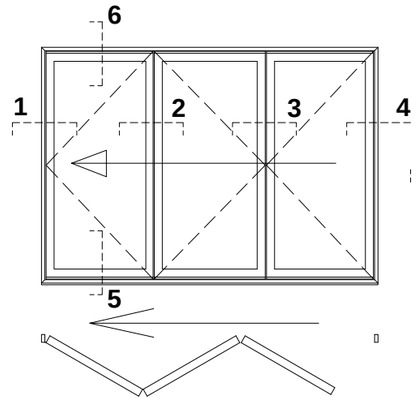

GLASS DEDUCTIONS

DV171	3 x	W/3 - 142.5	H - 164
DV173	3 x	W/3 - 142.5	H - 169

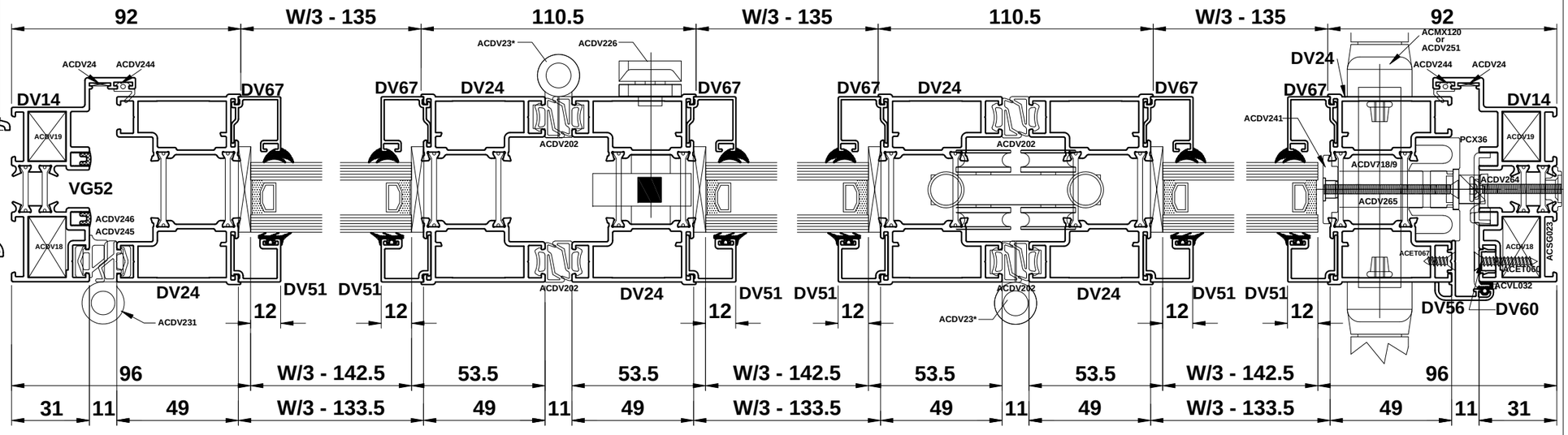

Do Not Scale From This Drawing

Visofold 2000

Type 4e With Standard Threshold - Open Out

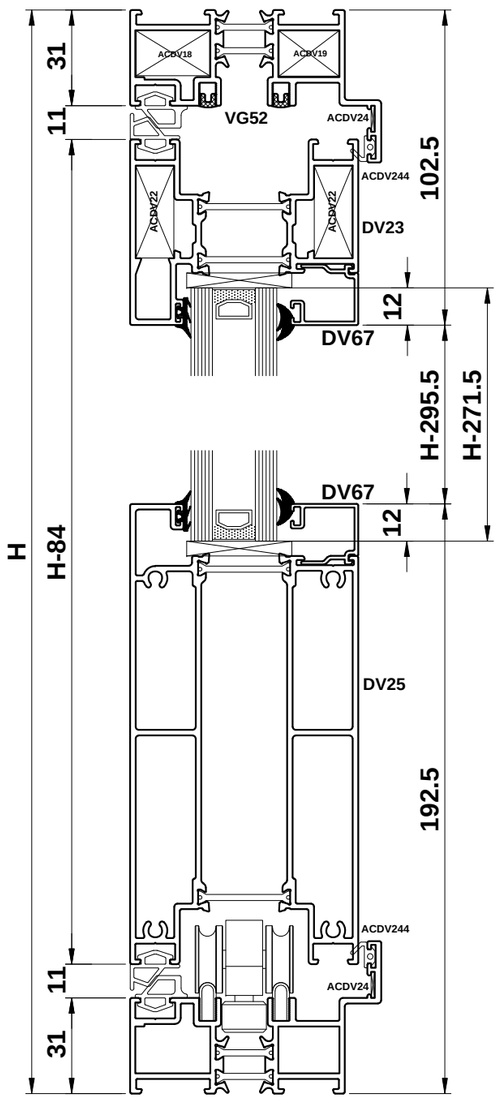

PROFILE CUTTING SCHEDULE

DV14		2		W	
DV14		2		H	
DV23		4		W/4-129.5	
DV24		8		H-84	
DV25		4		W/4-129.5	
DV51		8		H-295	
DV56		2		H-84	
DV63 or DV67	or	8		W/4-131	
DV63 or DV67	or	8		H-261	H-295
VG52		2		W-62	
VG52		4		H-62	
VG53		2		W-62	
DV68		2		H-84	
PCX15		1		H-84	
PCX36		2		H-84	

Note: PCX15 required for master door if leaf height is over 2285mm.

GLASS DEDUCTIONS	
4 X	W/4 - 139
	H - 271

ACCESSORIES

ACDV18	4	CLEAT FOR DV14
ACDV19	4	CLEAT FOR DV14
ACDV22	16	CLEAT FOR DV23
ACDV24	4	CHEVRON FOR DV14
ACDV244	2 x (W-90) + 2 x (H-90)	FLIPPER GASKET
ACDV245	2 x (W-62) + 2 x (H-62)	SEALING GASKET
ACDV202	8 x (H-84)	SEALING GASKET
ACDV246	2 x (W-62) + 2 x (H-62)	SEALING GASKET
ACDV225 or 226	2	SHOOTBOLT HANDLE
ACDV227	2	SHOOTBOLT GEARBOX
ACDV228	2 (PAIRS)	SHOOTBOLT ROD
ACDV259	2 (PAIRS)	SHOOTBOLT GUIDE
ACDV230	1	SHOOTBOLT COVER
ACDV231	13	INTERMEDIATE HINGE
ACDV232	1	BOTTOM ROLLER HINGE
ACDV233	1	TOP GUIDE HINGE
ACDV234	1	D-HANDLE/HINGE
ACDV220	1	PACKER FOR LOCK
ACDV718/9	1	MULTI-POINT LOCK
ACDV251	1 (PAIR)	LEVER HANDLES
ACDV56	2 (PAIRS)	END CAP FOR DV56
ACDV257	4 (SET OF 4)	INFILL BLOCK
ACMX01603 (SL)	2	HALF CYLINDER
ACDV258 (SL)	1	50/50 CYLINDER
ACET131	2	DRAIN HOLE COVER
ACET060	24	SCREW FOR ACDV253 & DV56
ACDV241	22	FIXING BLOCK FOR LOCK & KEEPS
ACDV265	22	FIXING SCREW FOR LOCK & KEEPS
ACET069	20	SCREW FOR ACDV225/6 & DV23
ACDR052	32	SCREW FOR DV25
ACVG31	8 x (W/4-137) + 8 x (H-271)	EXTERNAL GLAZING GASKET
ACVG34	6 x (W/4-137) + 6 x (H-271)	INTERNAL GLAZING GASKET

Type 4e

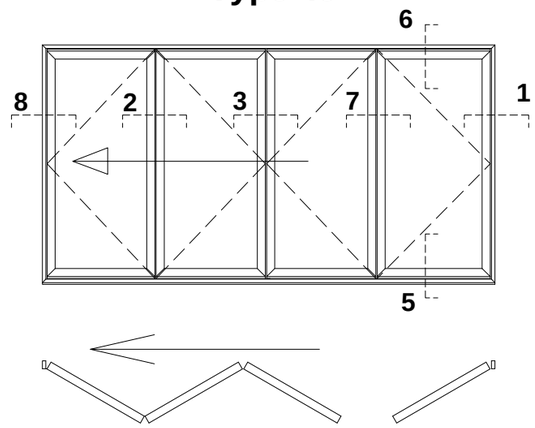

IMPORTANT NOTE:
Min. Sash Width 700mm / Max. Vent Width 1000mm
Max. Sash Weight 100kg
Max. Sash Height 2400mm Dependant On Site Conditions
Always Measure In the Last Vent.

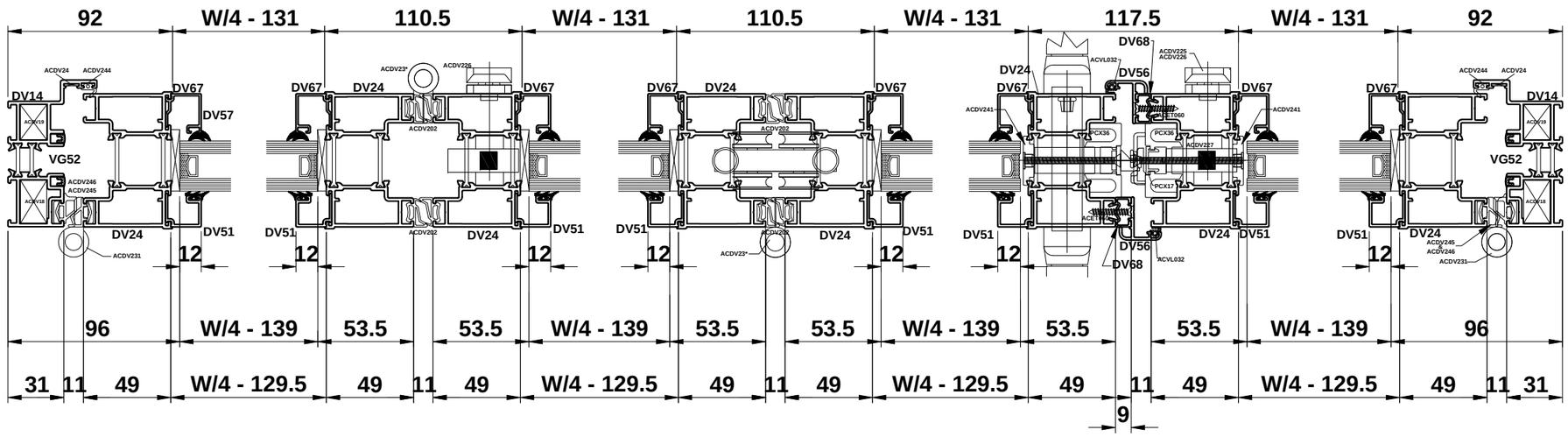

Do Not Scale From This Drawing

Visofold 2000

Type 4e With Low Threshold - Open Out

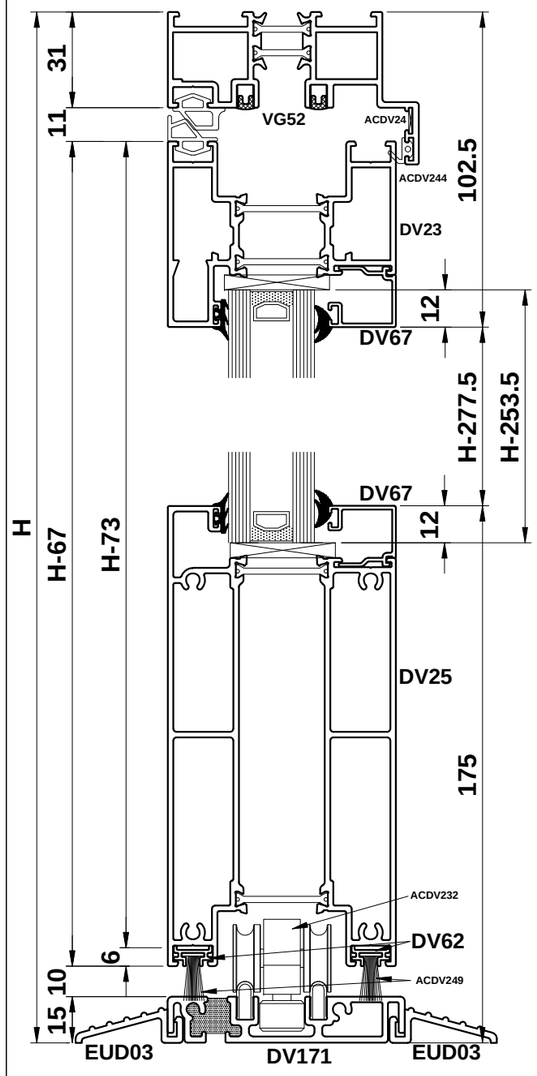

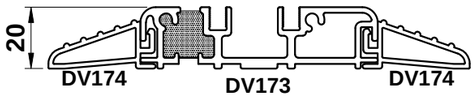

PROFILE CUTTING SCHEDULE (DV171)

DV14		1		W	
DV14		2		H	
DV171		1		W-66	
EUD03		1		W-66	
EUD03		1		W-99	
DV23		4		W/4-129.5	
DV24		8		H-73	
DV25		4		W/4-129.5	
DV51		8		H-278	
DV56		2		H-73	
DV63 or DV67	or	8		W/4-131	
DV63 or DV67	or	8		H-244	H-278
DV62		8		W/4-129.5	
VG52		2		W-62	
VG52		4		H-42	
VG53		2		W-66	
DV68		2		H-73	
PCX15		1		H-73	
PCX36		2		H-73	

PROFILE CUTTING SCHEDULE (DV173)

DV173		1		W-66	
DV174		1		W-66	
DV174		1		W-99	
DV24		8		H-78	
DV51		8		H-283	
DV56		1		H-78	
DV63 or DV67	or	8		H-249	H-283
PCX36		2		H-78	
DV68		2		H-78	
PCX15		1		H-78	

ACCESSORIES

ACDV18	2	CLEAT FOR DV14
ACDV19	2	CLEAT FOR DV14
ACDV22	16	CLEAT FOR DV23
ACDV24	2	CHEVRON FOR DV14
ACDV244	1 x (W-90) + 2 x (H-60)	FLIPPER GASKET
ACDV245	1 x (W-62) + 2 x (H-46)	SEALING GASKET
ACDV202	8 x (H-67)	SEALING GASKET
ACDV246	1 x (W-62) + 2 x (H-46)	SEALING GASKET
ACDV225 or 226	2	SHOOTBOLT HANDLE
ACDV227	2	SHOOTBOLT GEARBOX
ACDV228	2 (PAIRS)	SHOOTBOLT ROD
ACDV259	2 (PAIRS)	SHOOTBOLT GUIDE
ACDV230	1	SHOOTBOLT COVER
ACDV231	12	INTERMEDIATE HINGE
ACDV232	1	BOTTOM ROLLER HINGE
ACDV233	1	TOP GUIDE HINGE
ACDV234	1	D-HANDLE/HINGE
ACDV718/9	1	MULTI-POINT LOCK
ACDV251	1 (PAIR)	LEVER HANDLES
ACDV56	1 (PAIR)	END CAP FOR DV56
ACDV252	1	KEEP GUIDE
ACDV253	1	KEEP GUIDE PACKER
ACDV257	2 (SET OF 4)	INFILL BLOCK
ACDV171	1 (PAIR)	END CAPS FOR DV171/3
ACMX01603 (SL)	2	HALF CYLINDER
ACDV258 (SL)	1	50/50 CYLINDER
ACET060	24	SCREW FOR ACDV253 & DV56
ACET069	20	SCREW FOR ACDV225/6 & DV23
ACDV241	22	FIXING BLOCK FOR LOCK & KEEPS
ACDV265	22	FIXING SCREW FOR LOCK & KEEPS
ACDR052	36	SCREW FOR DV25 & DV171/3
ACVG31	8 x (W/4-137) + 8 x (H-254)	EXTERNAL GLAZING GASKET
ACVG34	8 x (W/4-137) + 8 x (H-254)	INTERNAL GLAZING GASKET
ACDV249	8 x (W/3-35.5)	WOOLPILE
ACVL032	2 x (H-67)	DV56 FLIPPER GASKET
ACDV261	3 (SET OF 4)	INFILL BLOCK

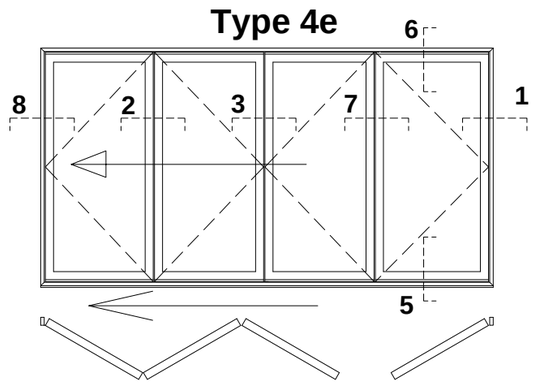

GLASS DEDUCTIONS

DV171	4 x	W/4 - 139	H - 253.5
DV173	4 x	W/4 - 139	H - 258.5

IMPORTANT NOTE:
Min. Sash Width 700mm / Max. Vent Width 1000mm
Max. Sash Weight 100kg
Max. Sash Height 2400mm Dependant On Site Conditions
Always Measure In the Last Vent.

Note: PCX15 required for master door if leaf height is over 2285mm.

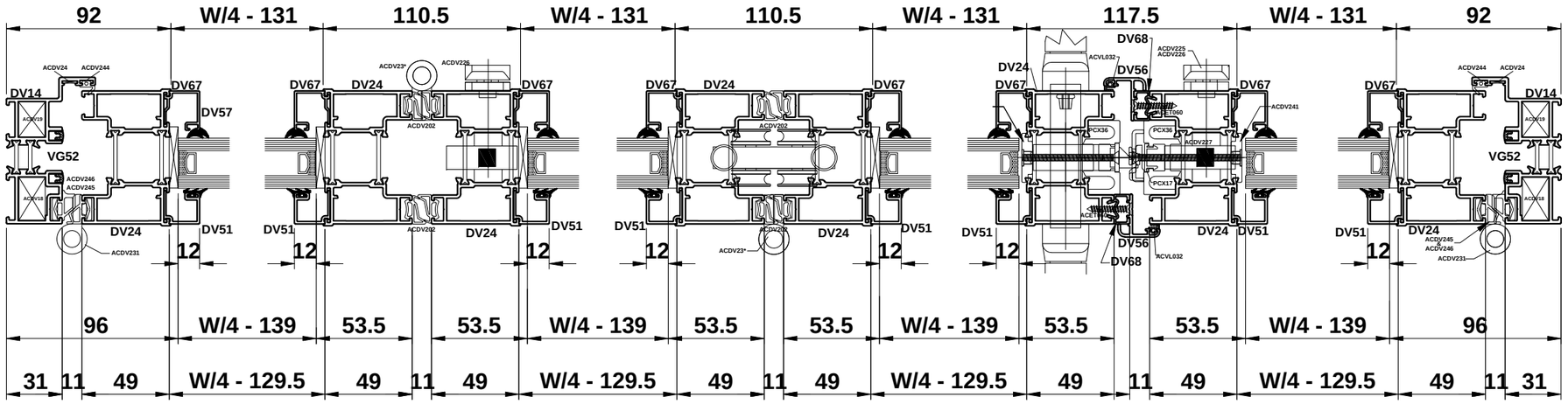

Do Not Scale From This Drawing

Visofold 2000

Type 4e With DV23 & Standard Threshold - Open Out

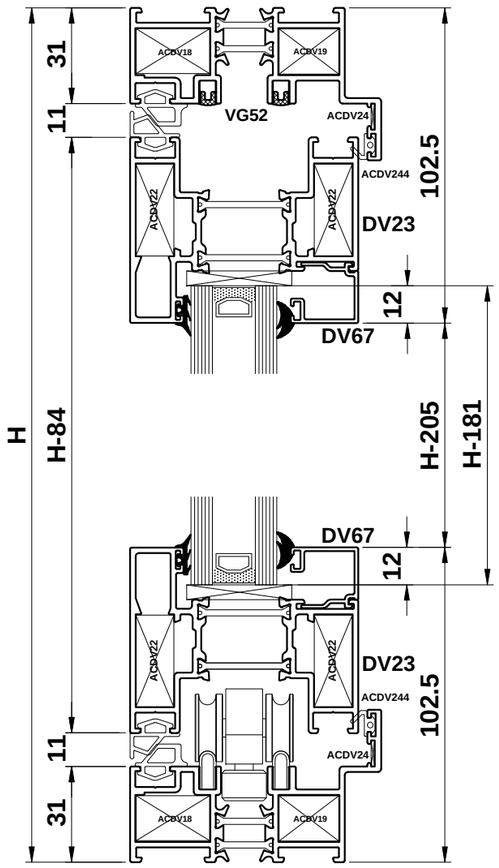

PROFILE CUTTING SCHEDULE

DV14		2		W	
DV14		2		H	
DV23		8		W/4-129.5	
DV24		8		H-84	
DV51		8		H-295.5	
DV56		2		H-84	
DV63 or DV67	or	8		W/4-131	
DV63 or DV67	or	8		H-261.5	H-295.5
VG52		2		W-62	
VG52		4		H-62	
VG53		2		W-62	
DV68		2		H-84	
PCX15		1		H-84	
PCX36		2		H-84	

Note: PCX15 required for master door if leaf height is over 2285mm.

GLASS DEDUCTIONS	
4 X	W/4 - 139
	H - 271.5

ACCESSORIES

ACDV18	4	CLEAT FOR DV14
ACDV19	4	CLEAT FOR DV14
ACDV22	32	CLEAT FOR DV23
ACDV24	4	CHEVRON FOR DV14
ACDV244	2 x (W-90) + 2 x (H-90)	FLIPPER GASKET
ACDV245	2 x (W-62) + 2 x (H-62)	SEALING GASKET
ACDV202	8 x (H-84)	SEALING GASKET
ACDV246	2 x (W-62) + 2 x (H-62)	SEALING GASKET
ACDV225 or 226	2	SHOOTBOLT HANDLE
ACDV227	2	SHOOTBOLT GEARBOX
ACDV228	2 (PAIRS)	SHOOTBOLT ROD
ACDV259	2 (PAIRS)	SHOOTBOLT GUIDE
ACDV230	1	SHOOTBOLT COVER
ACDV231	13	INTERMEDIATE HINGE
ACDV232	1	BOTTOM ROLLER HINGE
ACDV233	1	TOP GUIDE HINGE
ACDV234	1	D-HANDLE/HINGE
ACDV718/9	1	MULTI-POINT LOCK
ACDV251	1 (PAIR)	LEVER HANDLES
ACDV56	2 (PAIRS)	END CAP FOR DV56
ACDV253	1	KEEP GUIDE PACKER
ACDV257	4 (SET OF 4)	INFILL BLOCK
ACMX01603 (SL)	2	HALF CYLINDER
ACDV258 (SL)	1	50/50 CYLINDER
ACET131	2	DRAIN HOLE COVER
ACET060	24	SCREW FOR ACDV253 & DV56
ACDV241	22	FIXING BLOCK FOR LOCK & KEEPS
ACDV265	22	FIXING SCREW FOR LOCK & KEEPS
ACET069	36	SCREW FOR ACDV225/6 & DV23
ACVG31	8 x (W/4-137) + 8 x (H-271)	EXTERNAL GLAZING GASKET
ACVG34	6 x (W/4-137) + 6 x (H-271)	INTERNAL GLAZING GASKET

Type 4e

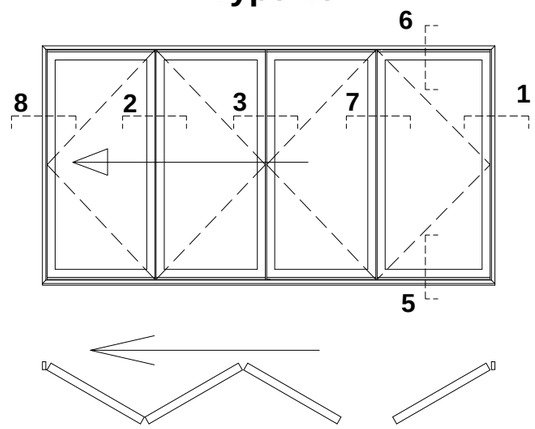

IMPORTANT NOTE:
Min. Sash Width 700mm / Max. Vent Width 1000mm
Max. Sash Weight 100kg
Max. Sash Height 2400mm Dependant On Site Conditions
Always Measure In the Last Vent.

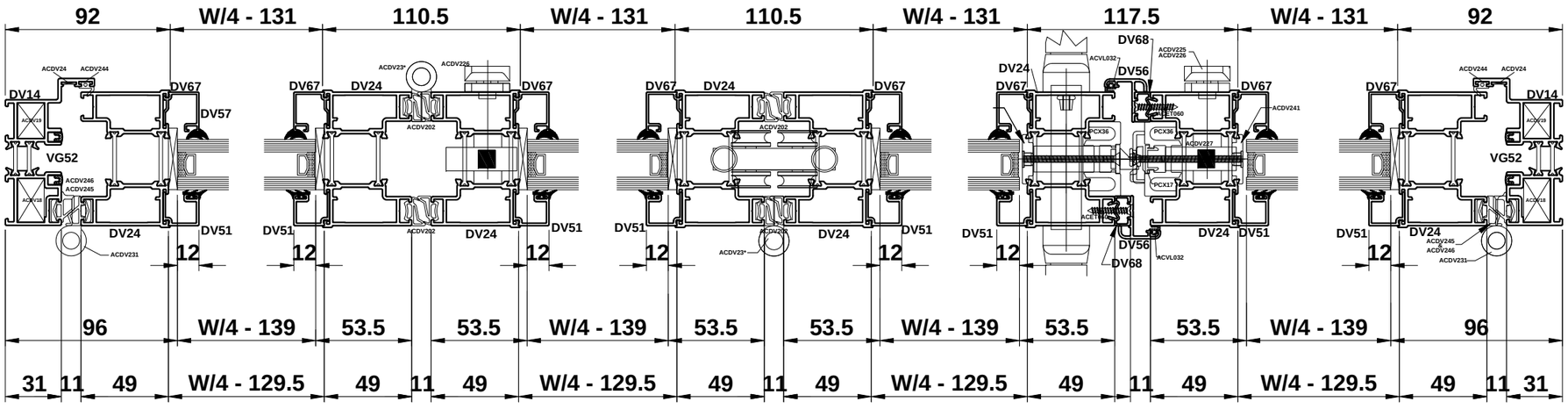

Do Not Scale From This Drawing

Visofold 2000

Type 4e With DV23 & Low Threshold - Open Out

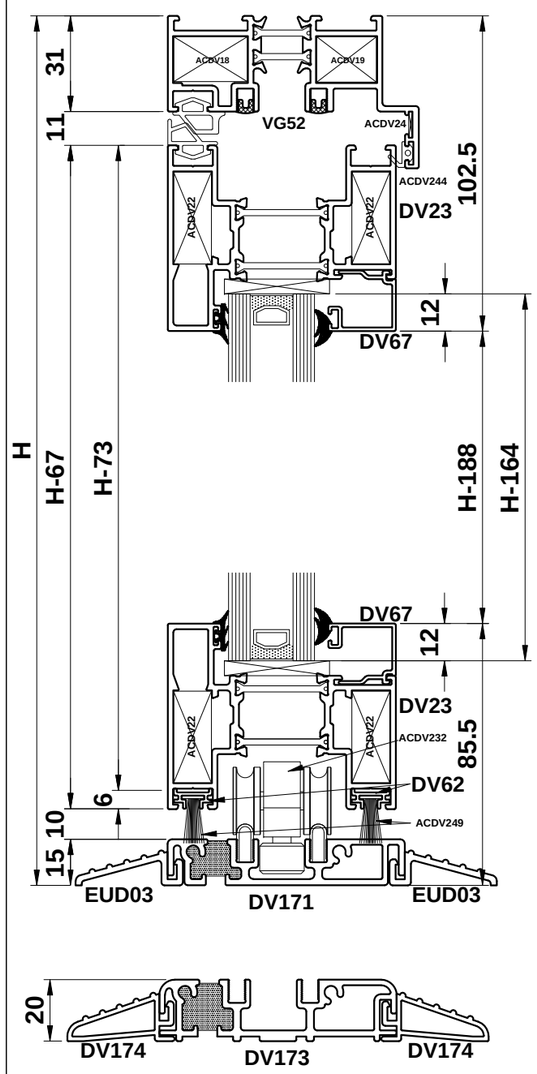

PROFILE CUTTING SCHEDULE (DV171)

DV14		1		W
DV14		2		H
DV171		1		W-66
EUD03		1		W-66
EUD03		1		W-99
DV23		8		W/4-129.5
DV24		8		H-73
DV51		8		H-278
DV56		2		H-73
DV63 or DV67	or	8		W/4-131
DV63 or DV67	or	8		H-244 H-278
DV62		8		W/4-128
VG52		2		W-62
VG52		4		H-42
VG53		2		W-66
DV68		2		H-73
PCX15		1		H-73
PCX36		2		H-73

PROFILE CUTTING SCHEDULE (DV173)

DV173		1		W-66
DV174		1		W-66
DV174		1		W-99
DV24		8		H-78
DV51		8		H-283
DV56		1		H-78
DV63 or DV67	or	8		H-249 H-283
PCX36		2		H-78
DV68		2		H-78
PCX15		1		H-78

Note: PCX15 required for master door if leaf height is over 2285mm.

ACCESSORIES

ACDV18	2	CLEAT FOR DV14
ACDV19	2	CLEAT FOR DV14
ACDV22	32	CLEAT FOR DV23
ACDV24	2	CHEVRON FOR DV14
ACDV244	1 x (W-90) + 2 x (H-60)	FLIPPER GASKET
ACDV245	1 x (W-62) + 2 x (H-46)	SEALING GASKET
ACDV202	8 x (H-67)	SEALING GASKET
ACDV246	1 x (W-62) + 2 x (H-46)	SEALING GASKET
ACDV225 or 226	2	SHOOTBOLT HANDLE
ACDV227	2	SHOOTBOLT GEARBOX
ACDV228	2 (PAIRS)	SHOOTBOLT ROD
ACDV259	2 (PAIRS)	SHOOTBOLT GUIDE
ACDV230	1	SHOOTBOLT COVER
ACDV231	12	INTERMEDIATE HINGE
ACDV232	1	BOTTOM ROLLER HINGE
ACDV233	1	TOP GUIDE HINGE
ACDV234	1	D-HANDLE/HINGE
ACDV718/9	1	MULTI-POINT LOCK
ACDV251	1 (PAIR)	LEVER HANDLES
ACDV56	1 (PAIR)	END CAP FOR DV56
ACDV252	1	KEEP GUIDE
ACDV253	1	KEEP GUIDE PACKER
ACDV257	2 (SET OF 4)	INFILL BLOCK
ACDV171	1 (PAIR)	END CAPS FOR DV171/3
ACMX01603 (SL)	2	HALF CYLINDER
ACDV258 (SL)	1	50/50 CYLINDER
ACET060	24	SCREW FOR ACDV253 & DV56
ACET069	20	SCREW FOR ACDV225/6 & DV23
ACDV241	22	FIXING BLOCK FOR LOCK & KEEPS
ACDV265	22	FIXING SCREW FOR LOCK & KEEPS
ACDR052	4	SCREW FOR DV25 & DV171/3
ACVG31	8 x (W/4-137) + 8 x (H-254)	EXTERNAL GLAZING GASKET
ACVG34	8 x (W/4-137) + 8 x (H-254)	INTERNAL GLAZING GASKET
ACDV249	8 x (W/3-35.5)	WOOLPILE
ACVL032	2 x (H-67)	DV56 FLIPPER GASKET
ACDV261	3 (SET OF 4)	INFILL BLOCK

Type 4e

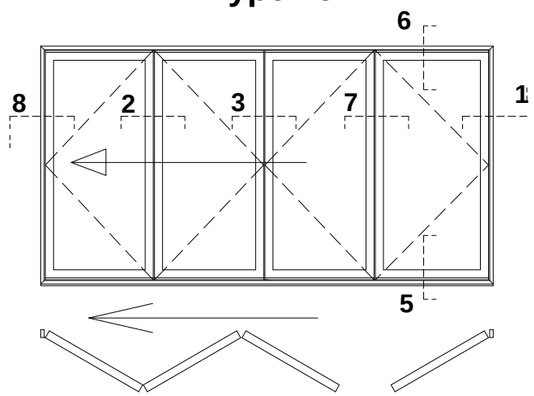

GLASS DEDUCTIONS

DV171	4 x	W/4 - 139	H - 164
DV173	4 x	W/4 - 139	H - 169

IMPORTANT NOTE:
Min. Sash Width 700mm / Max. Vent Width 1000mm
Max. Sash Weight 100kg
Max. Sash Height 2400mm Dependant On Site Conditions
Always Measure In the Last Vent.

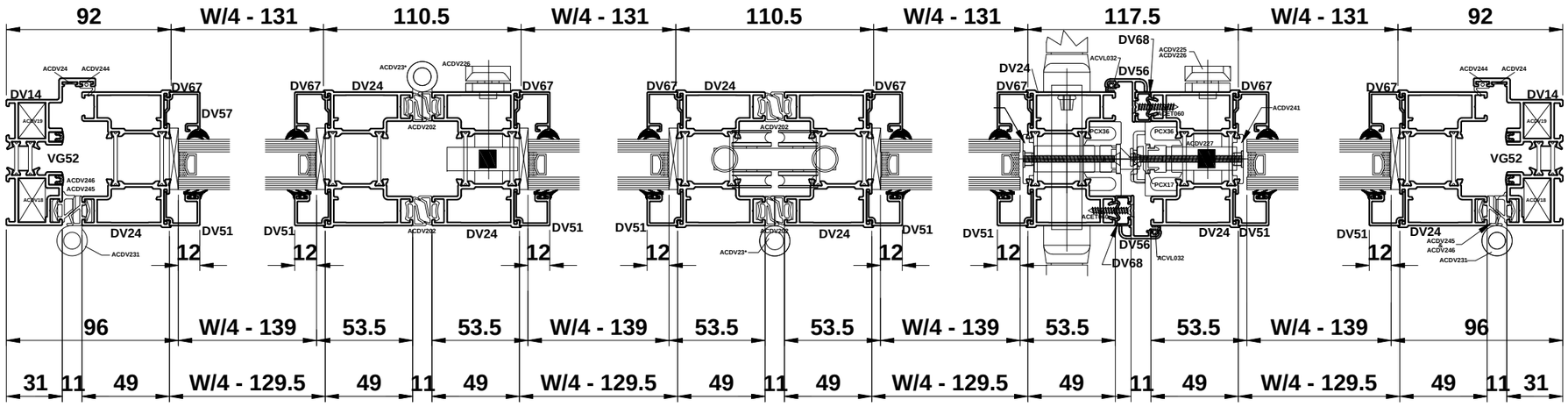

Do Not Scale From This Drawing

Visofold 2000

Type 6e With Standard Threshold - Open Out

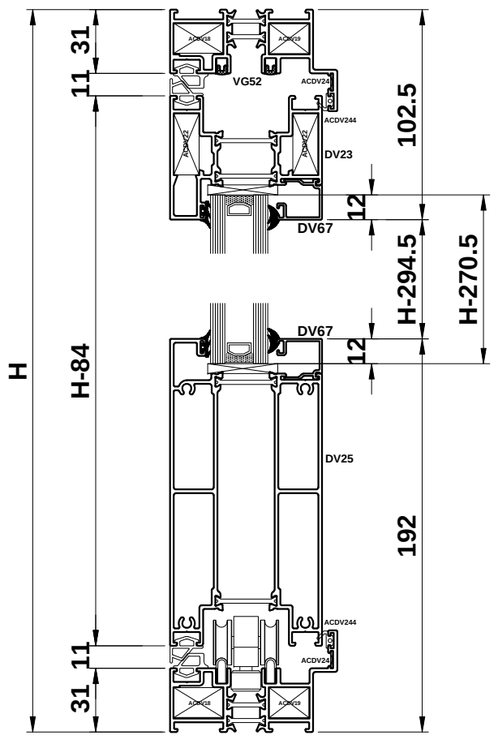

PROFILE CUTTING SCHEDULE

DV14		2		W	
DV14		2		H	
DV23		5		W/5-123.5	
DV24		10		H-84	
DV25		5		W/5-123.5	
DV51		10		H-294.5	
DV56		1		H-84	
DV63 or DV67	or	10		W/5-125	
DV63 or DV67	or	10		H-260.5	H-294.5
DV60		1		H-62	
VG52		2		W-62	
VG52		4		H-62	
VG53		2		W-62	
PCX36		1		H-84	

Note: PCX15 required for leaf heights over 2285mm.

GLASS DEDUCTIONS	
5 X	W/5 - 133
	H - 270.5

ACCESSORIES

ACDV18	4	CLEAT FOR DV14
ACDV19	4	CLEAT FOR DV14
ACDV22	20	CLEAT FOR DV23
ACDV24	4	CHEVRON FOR DV14
ACDV244	2 x (W-90) + 2 x (H-90)	FLIPPER GASKET
ACDV245	2 x (W-62) + 2 x (H-62)	SEALING GASKET
ACDV202	18 x (H-84)	SEALING GASKET
ACDV246	2 x (W-62) + 2 x (H-62)	SEALING GASKET
ACDV225 or 226	2	SHOOTBOLT HANDLE
ACDV227	2	SHOOTBOLT GEARBOX
ACDV228	2 (PAIR)	SHOOTBOLT ROD
ACDV259	2 (PAIR)	SHOOTBOLT GUIDE
ACDV230	2	SHOOTBOLT COVER
ACDV231	14	INTERMEDIATE HINGE
ACDV232	2	BOTTOM ROLLER HINGE
ACDV233	2	TOP GUIDE HINGE
ACDV234	2	D-HANDLE/HINGE
ACDV718/9	1	MULTI-POINT LOCK
ACDV251	1 (PAIR)	LEVER HANDLES
ACDV56	1 (PAIR)	END CAP FOR DV56
ACDV252	1	KEEP GUIDE
ACDV257	5 (SET OF 4)	INFILL BLOCK
ACVL032	1 x (H-84)	DV56 FLIPPER GASKET
ACMX01603 (SL)	2	HALF CYLINDER
ACDV258 (SL)	1	50/50 CYLINDER
ACET131	2	DRAIN HOLE COVER
ACET060	2	SCREW FOR ACDV252
ACDV241	11	FIXING BLOCK FOR LOCK
ACDV265	11	FIXING SCREW FOR LOCK
ACET067	11	SCREW FOR DV56
ACET069	24	SCREW FOR ACDV225/6 & DV23
ACDR052	40	SCREW FOR DV25
ACVG31	10 x (W/5-133) + 10 x (H-271)	EXTERNAL GLAZING GASKET
ACVG34	10 x (W/5-133) + 10 x (H-271)	INTERNAL GLAZING GASKET
ACSG023	11	FIXING PLATE FOR KEEPS
ACDV264	11	SCREW FOR KEEPS

Type 6e

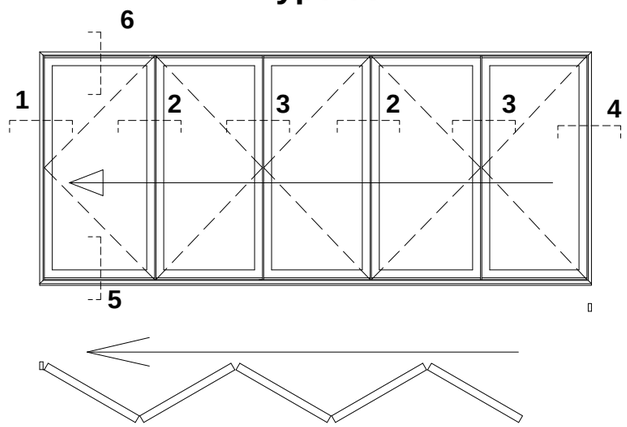

IMPORTANT NOTE:
Min. Sash Width 700mm / Max. Vent Width 1000mm
Max. Sash Weight 100kg
Max. Sash Height 2400mm Dependant On Site Conditions
Always Measure In the Last Vent.

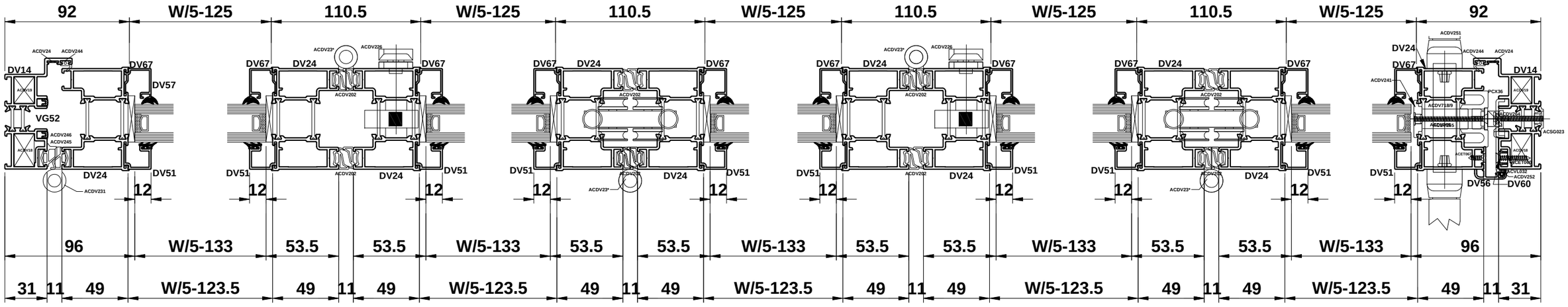

Do Not Scale From This Drawing

Visofold 2000

Type 6e With Low Threshold - Open Out

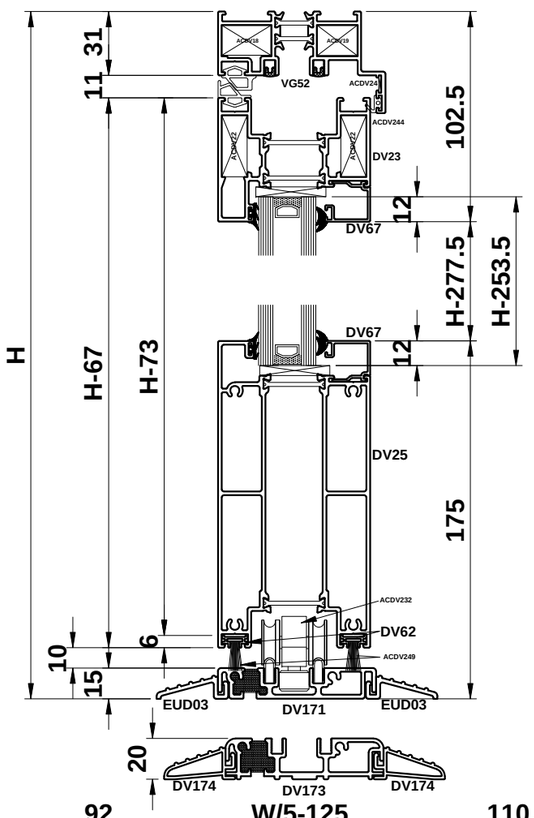

PROFILE CUTTING SCHEDULE (DV171)

DV14		1		W
DV14		2		H
DV171		1		W-66
EUD03		1		W-66
EUD03		1		W-99
DV23		5		W/5-123.5
DV24		10		H-73
DV25		5		W/5-123.5
DV51		10		H-277.5
DV56		1		H-73
DV63 or DV67	or	10		W/5-125
DV63 or DV67	or	10		H-244 H-278
DV60		1		H-46
DV62		10		W/5-123.5
VG52		2		W-62
VG52		4		H-42
VG53		2		W-66
PCX36		1		H-73

PROFILE CUTTING SCHEDULE (DV173)

DV173		1		W-66
DV174		1		W-66
DV174		1		W-99
DV24		10		H-78
DV51		10		H-283
DV56		1		H-78
DV63 or DV67	or	10		H-249 H-283
DV60		1		H-51
PCX36		2		H-78

Note: PCX15 required for leaf heights over 2285mm.

ACCESSORIES

ACDV18	2	CLEAT FOR DV14
ACDV19	2	CLEAT FOR DV14
ACDV22	20	CLEAT FOR DV23
ACDV24	2	CHEVRON FOR DV14
ACDV244	1 x (W-90) + 2 x (H-60)	FLIPPER GASKET
ACDV245	1 x (W-62) + 1 x (H-46)	SEALING GASKET
ACDV202	18 x (H-67)	SEALING GASKET
ACDV246	1 x (W-62) + 1 x (H-46)	SEALING GASKET
ACDV226	2	SHOOTBOLT HANDLE
ACDV227	2	SHOOTBOLT GEARBOX
ACDV228	2 (PAIRS)	SHOOTBOLT ROD
ACDV259	2 (PAIRS)	SHOOTBOLT GUIDE
ACDV230	2	SHOOTBOLT COVER
ACDV231	14	INTERMEDIATE HINGE
ACDV232	2	BOTTOM ROLLER HINGE
ACDV233	2	TOP GUIDE HINGE
ACDV234	2	D-HANDLE/HINGE
ACDV718/9	1	MULTI-POINT LOCK
ACDV251	1 (PAIR)	LEVER HANDLES
ACDV56	1 (PAIR)	END CAP FOR DV56
ACDV252	1	KEEP GUIDE
ACDV257	3 (SET OF 4)	INFILL BLOCK
ACDV171/173	1 (PAIR)	END CAPS FOR DV171/173
ACVL032	1 (H-67)	DV56 FLIPPER GASKET
ACMX01603 (S/L)	2	HALF CYLINDER
ACDV258 (SL)	1	50/50 CYLINDER
ACET060	2	SCREW FOR ACDV252
ACDV241	11	FIXING BLOCK FOR LOCK
ACDV265	11	FIXING SCREW FOR LOCK
ACET069	4	SCREW FOR ACDV225/6
ACDR052	36	SCREW FOR DV25 & DV171/3
ACVG31	10 x (W/5-133) + 10 x (H-254)	EXTERNAL GLAZING GASKET
ACVG34	10 x (W/5-133) + 10 x (H-254)	INTERNAL GLAZING GASKET
ACDV249	10 x (W/5-35.5)	WOOLPILE
ACDV261	3 (SET OF 4)	INFILL BLOCK
ACSG023	11	FIXING PLATE FOR KEEP
ACDV264	11	SCREW FOR KEEP
ACET067	11	SCREW FOR DV56

Type 6e

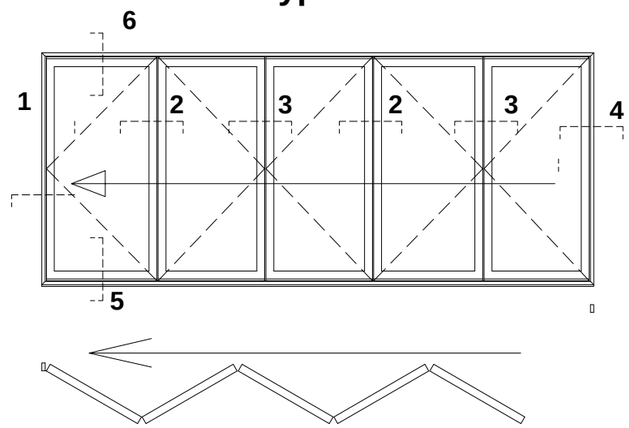

GLASS DEDUCTIONS

DV171	5 x	W/5 - 133	H - 253.5
DV173	5 x	W/5 - 133	H - 258.5

IMPORTANT NOTE:
Min. Sash Width 700mm / Max. Vent Width 1000mm
Max. Sash Weight 100kg
Max. Sash Height 2400mm Dependant On Site Conditions
Always Measure In the Last Vent.

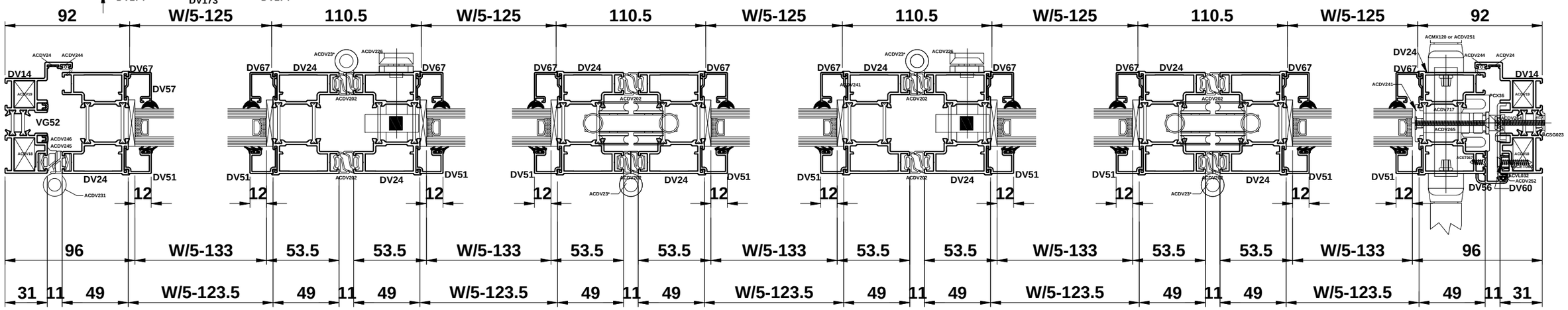

Do Not Scale From This Drawing

Type 6e With DV23 & Standard Threshold - Open Out

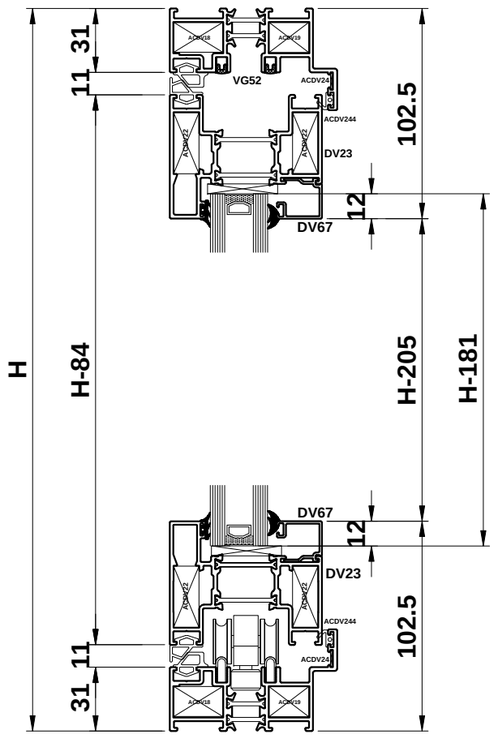

PROFILE CUTTING SCHEDULE

DV14		2		W	
DV14		2		H	
DV23		10		W/5-123.5	
DV24		10		H-84	
DV51		10		H-205	
DV56		1		H-84	
DV63 or DV67	or	10		W/5-125	
DV63 or DV67	or	10		H-239	H-205
DV60		1		H-62	
VG52		2		W-62	
VG52		4		H-62	
VG53		2		W-62	
PCX36		1		H-84	

Note: PCX15 required for leaf heights over 2285mm.

GLASS DEDUCTIONS 5 X	W/5 - 133
	H - 229

ACCESSORIES

ACDV18	4	CLEAT FOR DV14
ACDV19	4	CLEAT FOR DV14
ACDV22	40	CLEAT FOR DV23
ACDV24	4	CHEVRON FOR DV14
ACDV244	2 x (W-90) + 2 x (H-90)	FLIPPER GASKET
ACDV245	2 x (W-62) + 2 x (H-62)	SEALING GASKET
ACDV202	18 x (H-84)	SEALING GASKET
ACDV246	2 x (W-62) + 2 x (H-62)	SEALING GASKET
ACDV225 or 226	2	SHOOTBOLT HANDLE
ACDV227	2	SHOOTBOLT GEARBOX
ACDV228	2 (PAIR)	SHOOTBOLT ROD
ACDV259	2 (PAIR)	SHOOTBOLT GUIDE
ACDV230	2	SHOOTBOLT COVER
ACDV231	14	INTERMEDIATE HINGE
ACDV232	2	BOTTOM ROLLER HINGE
ACDV233	2	TOP GUIDE HINGE
ACDV234	2	D-HANDLE/HINGE
ACDV718/9	1	MULTI-POINT LOCK
ACDV251	1 (PAIR)	LEVER HANDLES
ACDV56	1 (PAIR)	END CAP FOR DV56
ACDV252	1	KEEP GUIDE
ACDV257	5 (SET OF 4)	INFILL BLOCK
ACVL032	1 x (H-84)	DV56 FLIPPER GASKET
ACMX01603 (SL)	2	HALF CYLINDER
ACDVV258 (SL)	1	50/50 CYLINDER
ACET131	2	DRAIN HOLE COVER
ACET060	2	SCREW FOR ACDV252
ACDV241	11	FIXING BLOCK FOR LOCK
ACDV265	11	FIXING SCREW FOR LOCK
ACET067	11	SCREW FOR DV56
ACET069	4	SCREW FOR ACDV225/6
ACVG31	10 x (W/5-133) + 10 x (H-229)	EXTERNAL GLAZING GASKET
ACVG34	10 x (W/5-133) + 10 x (H-229)	INTERNAL GLAZING GASKET
ACSG023	11	FIXING PLATE FOR KEEP
ACSG071	11	SCREW FOR KEEP

Type 6e

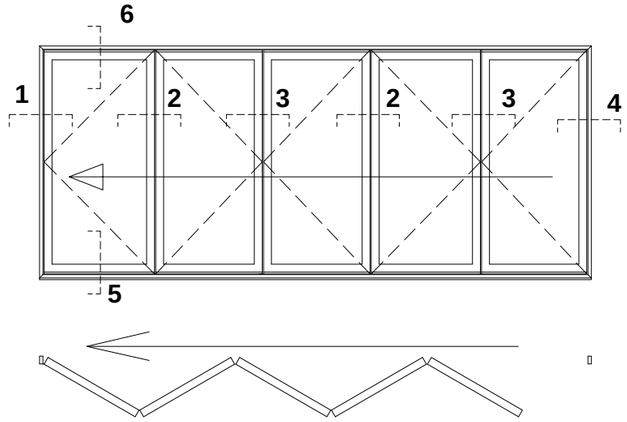

IMPORTANT NOTE:
Min. Sash Width 700mm / Max. Vent Width 1000mm
Max. Sash Weight 100kg
Max. Sash Height 2400mm Dependant On Site Conditions
Always Measure In the Last Vent.

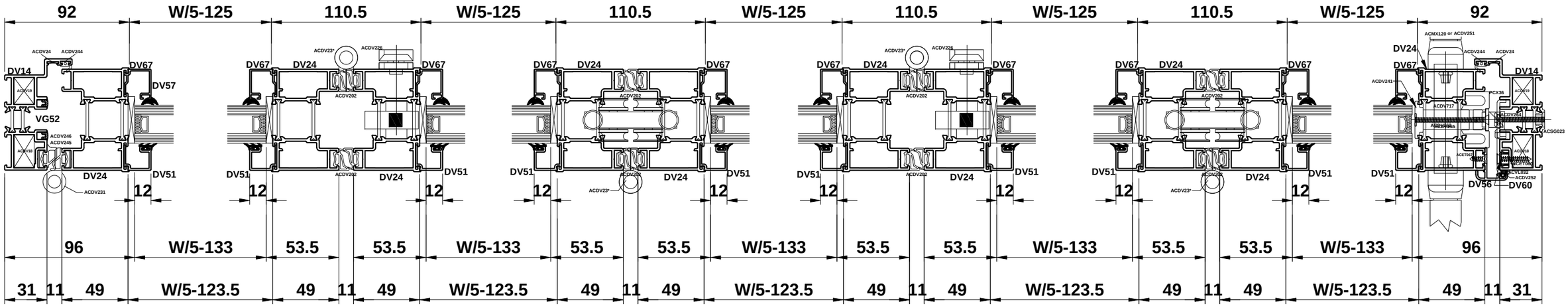

Do Not Scale From This Drawing

Type 6e With DV23 & Low Threshold - Open Out

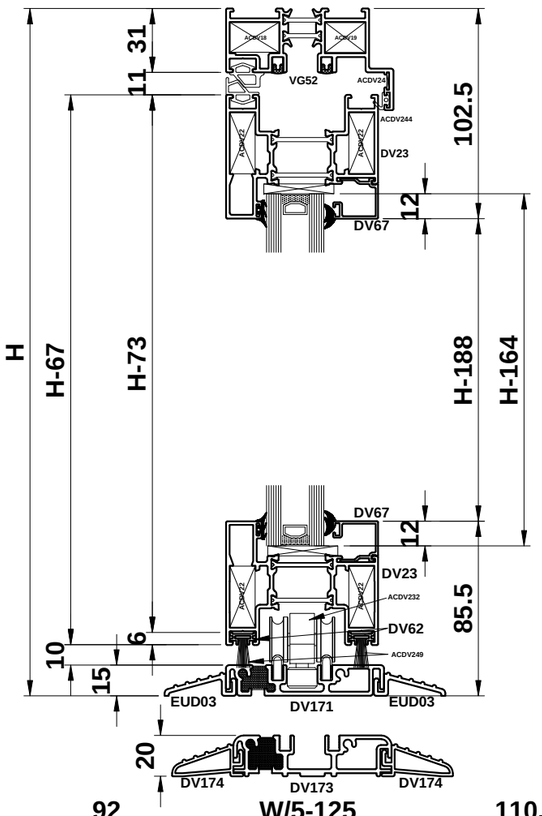

PROFILE CUTTING SCHEDULE (DV171)

DV14		1		W	
DV14		2		H	
DV171		1		W-66	
EUD03		1		W-66	
EUD03		1		W-99	
DV23		5		W/5-123.5	
DV24		10		H-73	
DV25		5		W/5-123.5	
DV51		10		H-278	
DV56		1		H-73	
DV63 or DV67	or	10		W/5-125	
DV63 or DV67	or	10		H-244	H-278
DV60		1		H-46	
DV62		10		W/5-123.5	
VG52		2		W-62	
VG52		4		H-42	
VG53		2		W-66	
PCX36		1		H-73	

PROFILE CUTTING SCHEDULE (DV173)

DV173		1		W-66	
DV174		1		W-66	
DV174		1		W-99	
DV24		10		H-78	
DV51		10		H-283	
DV56		1		H-78	
DV63 or DV67	or	10		H-249	H-283
DV60		1		H-51	
PCX36		1		H-78	

Note: PCX15 required for leaf heights over 2285mm.

ACCESSORIES

ACDV18	2	CLEAT FOR DV14
ACDV19	2	CLEAT FOR DV14
ACDV22	40	CLEAT FOR DV23
ACDV24	2	CHEVRON FOR DV14
ACDV244	1 x (W-90) + 2 x (H-60)	FLIPPER GASKET
ACDV245	1 x (W-62) + 2 x (H-46)	SEALING GASKET
ACDV202	18 x (H-67)	SEALING GASKET
ACDV246	1 x (W-62) + 2 x (H-46)	SEALING GASKET
ACDV226	2	SHOOTBOLT HANDLE
ACDV227	2	SHOOTBOLT GEARBOX
ACDV228	2 (PAIRS)	SHOOTBOLT ROD
ACDV259	2 (PAIRS)	SHOOTBOLT GUIDE
ACDV230	2	SHOOTBOLT COVER
ACDV231	14	INTERMEDIATE HINGE
ACDV232	2	BOTTOM ROLLER HINGE
ACDV233	2	TOP GUIDE HINGE
ACDV234	2	D-HANDLE/HINGE
ACDV718/9	1	MULTI-POINT LOCK
ACDV251	1 (PAIR)	LEVER HANDLES
ACDV56	1 (PAIR)	END CAP FOR DV56
ACDV252	1	KEEP GUIDE
ACDV257	3 (SET OF 4)	INFILL BLOCK
ACDV171/3	1 (PAIR)	END CAPS FOR DV171/3
ACVL032	1 (H-67)	DV56 FLIPPER GASKET
ACMX01603 (SL)	2	HALF CYLINDER
ACDV258 (SL)	1	50/50 CYLINDER
ACET060	2	SCREW FOR ACDV252
ACDV241	11	FIXING BLOCK FOR LOCK
ACDV265	11	FIXING SCREW FOR LOCK
ACET069	4	SCREW FOR ACDV225/6
ACDR052	4	SCREW FOR DV171/3
ACVG31	10 x (W/5-133) + 10 x (H-254)	EXTERNAL GLAZING GASKET
ACVG34	10 x (W/5-133) + 10 x (H-254)	INTERNAL GLAZING GASKET
ACDV249	10 x (W/5-35.5)	WOOLPILE
ACDV261	3 (SET OF 4)	INFILL BLOCK
ACSG023	11	FIXING PLATE FOR KEEP
ACDV264	11	SCREW FOR KEEP
ACET067	11	SCREW FOR DV56

Type 6e

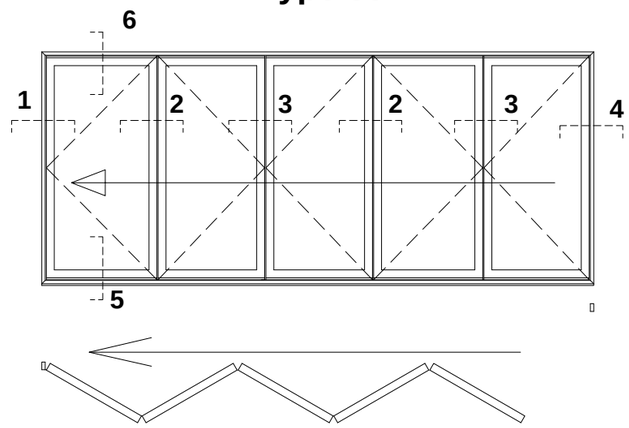

GLASS DEDUCTIONS

DV171	5 x	W/5 - 133	H - 254
DV173	5 x	W/5 - 133	H - 259

IMPORTANT NOTE:
Min. Sash Width 700mm / Max. Vent Width 1000mm
Max. Sash Weight 100kg
Max. Sash Height 2400mm Dependant On Site Conditions
Always Measure In the Last Vent.

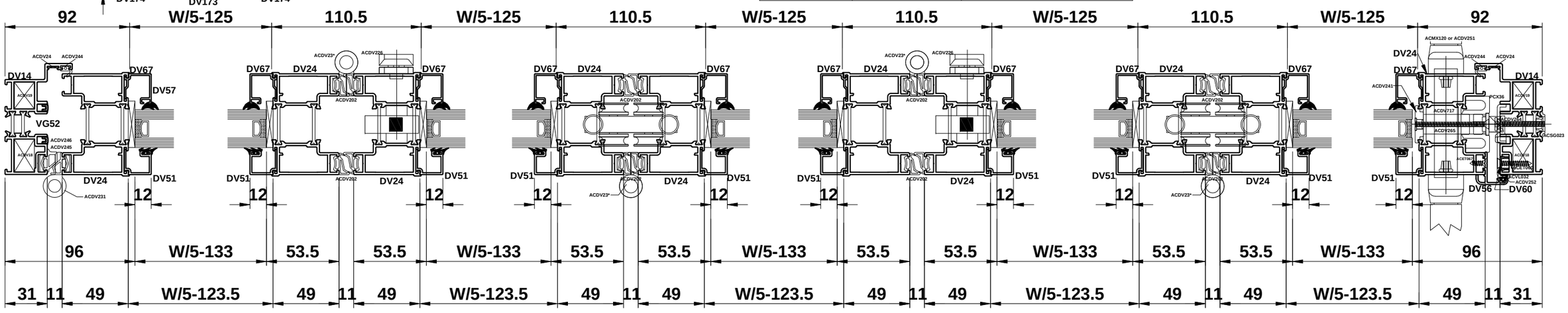

Do Not Scale From This Drawing

Type 7e With Standard Threshold - Open Out

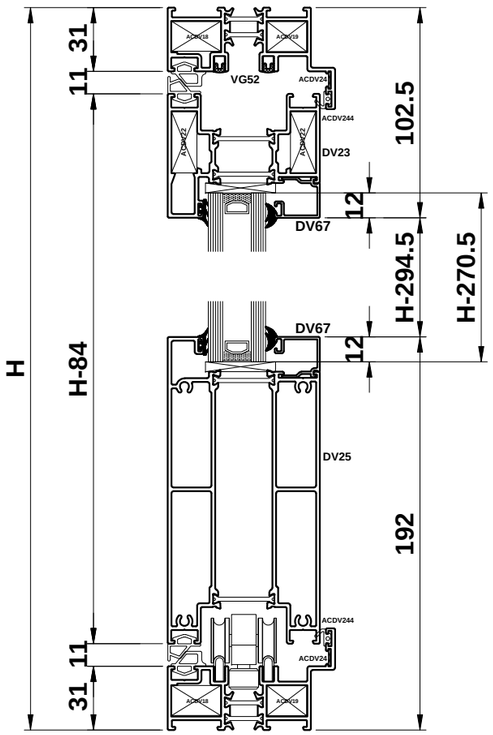

PROFILE CUTTING SCHEDULE

DV14		2		W	
DV14		2		H	
DV23		6		W/6-122.5	
DV24		12		H-84	
DV25		6		W/6-122.5	
DV51		12		H-294.5	
DV56		2		H-84	
DV63 or DV67	or	12		W/6-124	
DV63 or DV67	or	12		H-260.5	H-294.5
VG52		2		W-62	
VG52		4		H-62	
VG53		2		W-62	
DV68		2		H-84	
PCX15		1		H-84	
PCX36		2		H-84	

Note: PCX15 required for master door if leaf height is over 2285mm.

GLASS SIZES		
	6 X	W/6 - 132
		H - 271.5

ACCESSORIES

ACDV18	4	CLEAT FOR DV14
ACDV19	4	CLEAT FOR DV14
ACDV22	24	CLEAT FOR DV23
ACDV24	4	CHEVRON FOR DV14
ACDV244	2 x (W-90) + 2 x (H-90)	FLIPPER GASKET
ACDV245	2 x (W-62) + 2 x (H-62)	SEALING GASKET
ACDV202	18 x (H-84)	SEALING GASKET
ACDV246	2 x (W-62) + 2 x (H-62)	SEALING GASKET
ACDV225 or 226	3	SHOOTBOLT HANDLE
ACDV227	3	SHOOTBOLT GEARBOX
ACDV228	3 (PAIRS)	SHOOTBOLT ROD
ACDV259	3 (PAIRS)	SHOOTBOLT GUIDE
ACDV230	2	SHOOTBOLT COVER
ACDV231	18	INTERMEDIATE HINGE
ACDV232	2	BOTTOM ROLLER HINGE
ACDV233	2	TOP GUIDE HINGE
ACDV234	2	D-HANDLE/HINGE
ACDV718/9	1	MULTI-POINT LOCK
ACDV251	1 (PAIR)	LEVER HANDLES
ACDV56	2 (PAIRS)	END CAP FOR DV56
ACDV257	6 (SET OF 4)	INFILL BLOCK
ACVL032	2 x (H-84)	DV56 FLIPPER GASKET
ACMX01603 (SL)	3	HALF CYLINDER
ACDV241	22	FIXING BLOCK FOR LOCK & KEEPS
ACDV265	22	FIXING SCREW FOR LOCK & KEEPS
ACDV258	1	50/50 CYLINDER
ACET131	2	DRAIN HOLE COVER
ACET060	22	SCREW FOR DV56
ACET069	30	SCREW FOR ACDV225/6 & DV23
ACDR052	48	SCREW FOR DV25
ACVG31	12 x (W/6-134) + 12 x (H-271)	EXTERNAL GLAZING GASKET
ACVG34	12 x (W/6-134) + 12 x (H-271)	INTERNAL GLAZING GASKET

Type 7e

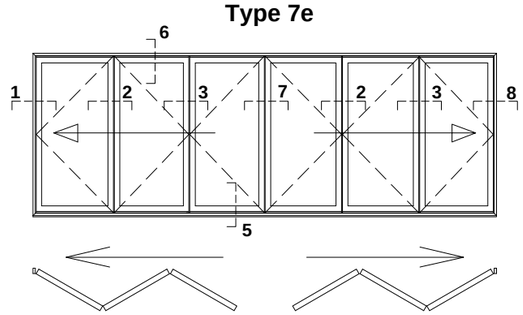

IMPORTANT NOTE:
Min. Sash Width 700mm / Max. Vent Width 1000mm
Max. Sash Weight 100kg
Max. Sash Height 2400mm Dependant On Site Conditions
Always Measure In the Last Vent.

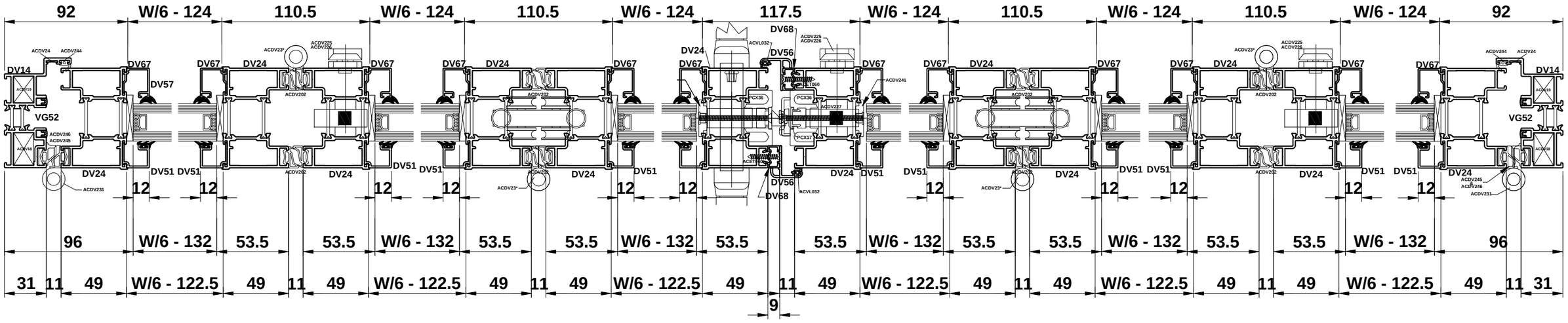

Do Not Scale From This Drawing

Visofold 2000

Type 7e With Low Threshold - Open Out

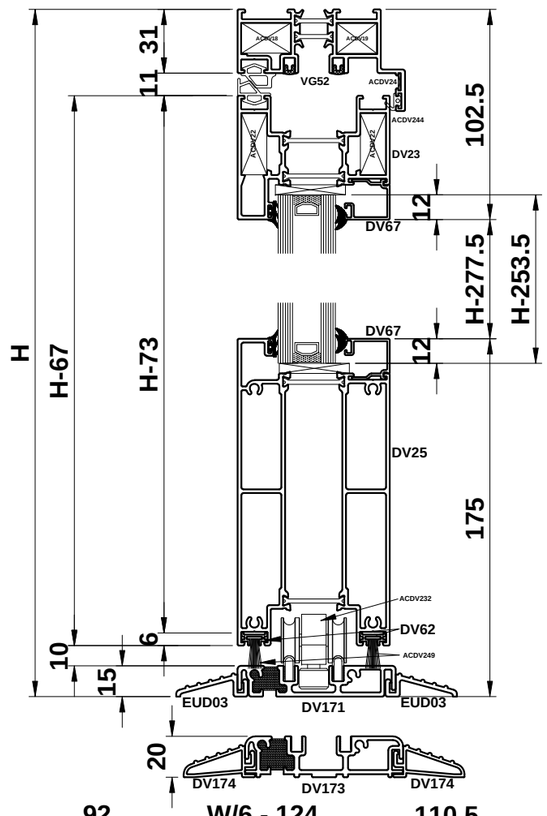

PROFILE CUTTING SCHEDULE (DV171)

DV14		1		W	
DV14		2		H	
DV171		1		W-66	
EUD03		1		W-66	
EUD03		1		W-99	
DV23		6		W/6-122.5	
DV24		6		H-73	
DV25		6		W/6-122.5	
DV51		12		H-278	
DV56		2		H-73	
DV63 or DV67	or	12		W/6-124	
DV63 or DV67	or	12		H-244	H-278
DV62		12		W/6-122.5	
VG52		2		W-62	
VG52		4		H-42	
VG53		2		W-66	
DV68		2		H-73	
PCX15		1		H-73	
PCX36		2		H-73	

PROFILE CUTTING SCHEDULE (DV173)

DV173		1		W-66	
DV174		1		W-66	
DV174		1		W-99	
DV24		12		H-78	
DV51		12		H-283	
DV56		1		H-78	
DV63 or DV67	or	12		H-249	H-283
DV60		1		H-51	
DV68		2		H-78	
PCX15		1		H-78	
PCX36		2		H-78	

ACCESSORIES

ACDV18	2	CLEAT FOR DV14
ACDV19	2	CLEAT FOR DV14
ACDV22	12	CLEAT FOR DV23
ACDV24	2	CHEVRON FOR DV14
ACDV244	1 x (W-90) + 2 x (H-60)	FLIPPER GASKET
ACDV245	1 x (W-62) + 2 x (H-42)	SEALING GASKET
ACDV202	18 x (H-84)	SEALING GASKET
ACDV246	1 x (W-62) + 2 x (H-42)	SEALING GASKET
ACDV225 or 226	3	SHOOTBOLT HANDLE
ACDV227	3	SHOOTBOLT GEARBOX
ACDV228	3 (PAIRS)	SHOOTBOLT ROD
ACDV259	3 (PAIRS)	SHOOTBOLT GUIDE
ACDV230	2	SHOOTBOLT COVER
ACDV231	18	INTERMEDIATE HINGE
ACDV232	2	BOTTOM ROLLER HINGE
ACDV233	2	TOP GUIDE HINGE
ACDV234	2	D-HANDLE/HINGE
ACDV718/9	1	MULTI-POINT LOCK
ACDV251	1 (PAIR)	LEVER HANDLES
ACDV56	2 (PAIRS)	END CAP FOR DV56
ACDV257	3 (SET OF 4)	INFILL BLOCK
ACDV171/3	1 (PAIR)	END CAPS FOR DV171/173
ACMX01603 (SL)	3	HALF CYLINDER
ACDV258	1	50/50 CYLINDER
ACET060	22	SCREW FOR DV56
ACDV241	22	FIXING BLOCK FOR LOCK & KEEPS
ACDV265	22	FIXING SCREW FOR LOCK & KEEPS
ACET069	30	SCREW FOR ACDV225/6 & DV23
ACDR052	52	SCREW FOR DV25 & DV171/3
ACVG31	12 x (W/6-134) + 12 x (H-254)	EXTERNAL GLAZING GASKET
ACVG34	12 x (W/6-134) + 12 x (H-254)	INTERNAL GLAZING GASKET
ACDV249	12 x (W/6-22.5)	WOOLPILE
ACDV261	3 (SET OF 4)	INFILL BLOCK

Note: PCX15 required for master door if leaf height is over 2285mm.

Type 7e

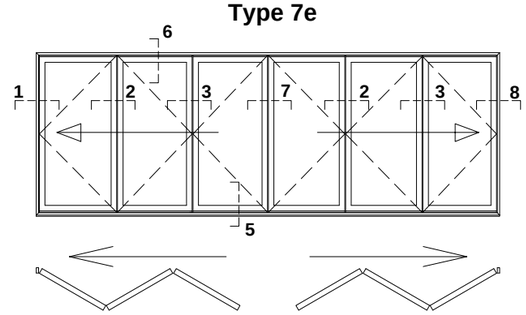

GLASS DEDUCTIONS

DV171	6 x	W/6 - 132	H - 253.5
DV173	6 x	W/6 - 132	H - 258.5

IMPORTANT NOTE:
Min. Sash Width 700mm / Max. Vent Width 1000mm
Max. Sash Weight 100kg
Max. Sash Height 2400mm Dependant On Site Conditions
Always Measure In the Last Vent.

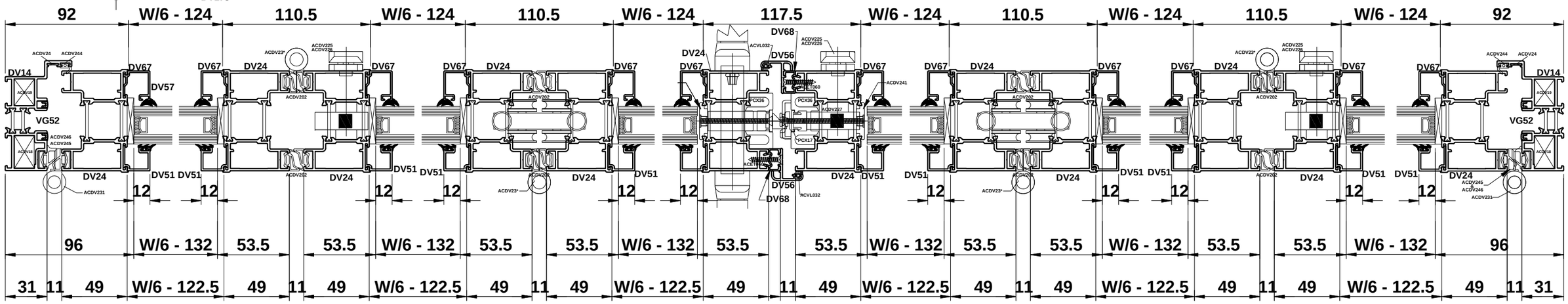

Do Not Scale From This Drawing

Type 7e With DV23 & Standard Threshold - Open Out

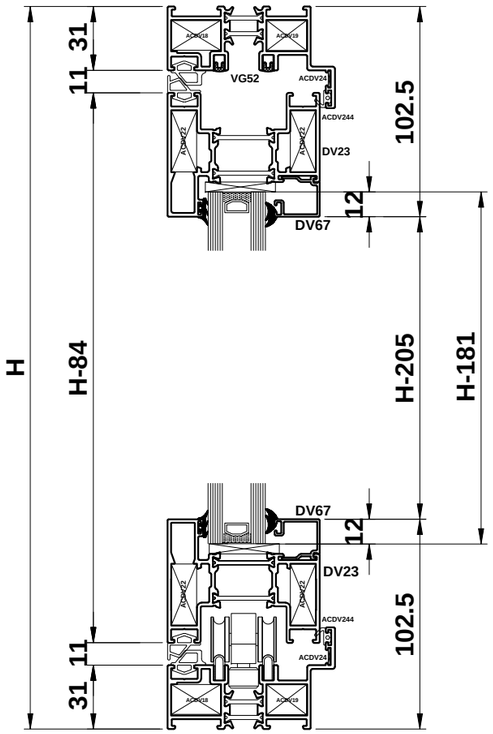

PROFILE CUTTING SCHEDULE

DV14		2		W	
DV14		2		H	
DV23		12		W/6-122.5	
DV24		12		H-84	
DV51		12		H-205	
DV56		2		H-84	
DV63 or DV67	or	12		W/6-124	
DV63 or DV67	or	12		H-222	H-188
VG52		2		W-62	
VG52		4		H-62	
VG53		2		W-62	
DV68		2		H-84	
PCX15		1		H-84	
PCX36		2		H-84	

Note: PCX15 required for master door if leaf height is over 2285mm.

GLASS SIZES		
	6 X	W/6 - 132
		H - 229

ACCESSORIES

ACDV18	4	CLEAT FOR DV14
ACDV19	4	CLEAT FOR DV14
ACDV22	48	CLEAT FOR DV23
ACDV24	4	CHEVRON FOR DV14
ACDV244	2 x (W-90) + 2 x (H-90)	FLIPPER GASKET
ACDV245	2 x (W-62) + 2 x (H-62)	SEALING GASKET
ACDV202	18 x (H-84)	SEALING GASKET
ACDV246	2 x (W-62) + 2 x (H-62)	SEALING GASKET
ACDV225 or 226	3	SHOOTBOLT HANDLE
ACDV227	3	SHOOTBOLT GEARBOX
ACDV228	3 (PAIRS)	SHOOTBOLT ROD
ACDV259	3 (PAIRS)	SHOOTBOLT GUIDE
ACDV230	2	SHOOTBOLT COVER
ACDV231	18	INTERMEDIATE HINGE
ACDV232	2	BOTTOM ROLLER HINGE
ACDV233	2	TOP GUIDE HINGE
ACDV234	2	D-HANDLE/HINGE
ACDV718/9	1	MULTI-POINT LOCK
ACDV251	1 (PAIR)	LEVER HANDLES
ACDV56	2 (PAIRS)	END CAP FOR DV56
ACDV257	6 (SET OF 4)	INFILL BLOCK
ACVL032	2 x (H-84)	DV56 FLIPPER GASKET
ACMX01603 (SL)	3	HALF CYLINDER
ACDV241	22	FIXING BLOCK FOR LOCK & KEEPS
ACDV265	22	FIXING SCREW FOR LOCK & KEEPS
ACDV258	1	50/50 CYLINDER
ACET131	2	DRAIN HOLE COVER
ACET060	22	SCREW FOR DV56
ACET069	30	SCREW FOR ACDV225/6 & DV23
ACDR052	48	SCREW FOR DV25
ACVG31	12 x (W/6-134) + 12 x (H-271)	EXTERNAL GLAZING GASKET
ACVG34	12 x (W/6-134) + 12 x (H-271)	INTERNAL GLAZING GASKET

Type 7e

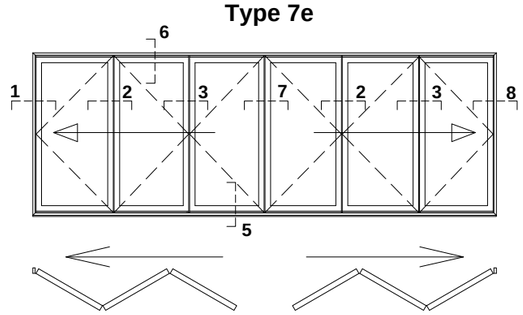

IMPORTANT NOTE:
Min. Sash Width 700mm / Max. Vent Width 1000mm
Max. Sash Weight 100kg
Max. Sash Height 2400mm Dependant On Site Conditions
Always Measure In the Last Vent.

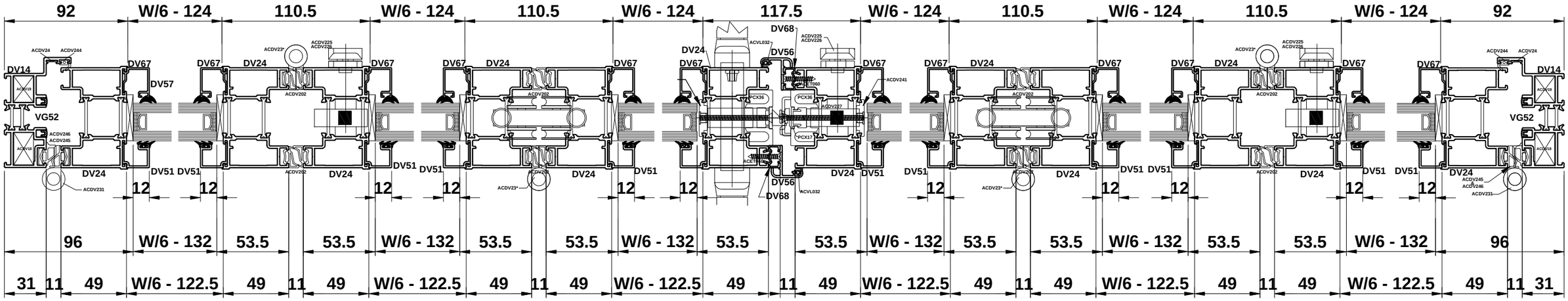

Do Not Scale From This Drawing

Visofold 2000

Type 7e With DV23 & Low Threshold - Open Out

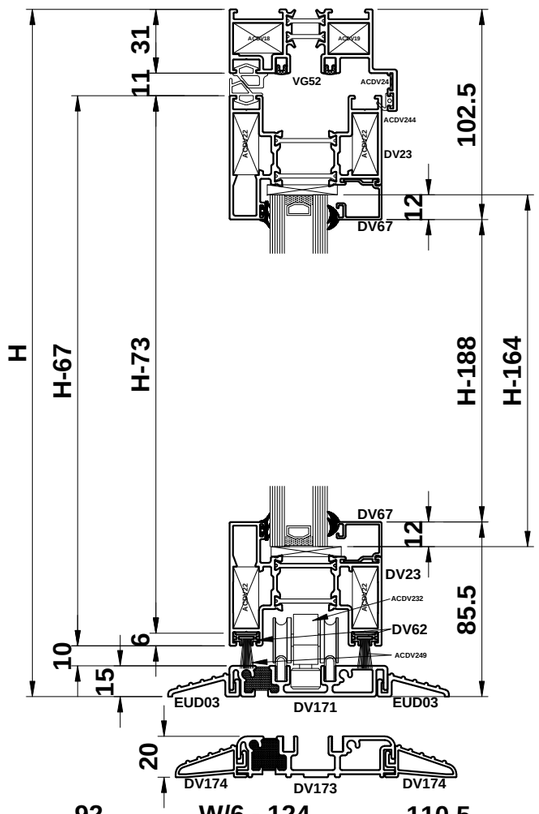

PROFILE CUTTING SCHEDULE (DV171)

DV14		1		W	
DV14		2		H	
DV171		1		W-66	
EUD03		1		W-66	
EUD03		1		W-99	
DV23		6		W/6-122.5	
DV24		12		H-73	
DV51		12		H-188	
DV56		2		H-73	
DV63 or DV67	or	12		W/6-124	
DV63 or DV67	or	12		H-154	H-188
DV62		12		W/6-122.5	
VG52		2		W-62	
VG52		4		H-42	
VG53		2		W-66	
DV68		2		H-73	
PCX15		1		H-73	
PCX36		2		H-73	

PROFILE CUTTING SCHEDULE (DV173)

DV173		1		W-66	
DV174		1		W-66	
DV174		1		W-99	
DV24		6		H-78	
DV51		6		H-188	
DV56		1		H-78	
DV63 or DV67	or	6		H-222	H-188
DV60		1		H-51	
DV68		2		H-78	
PCX15		1		H-78	
PCX36		2		H-78	

ACCESSORIES

ACDV18	2	CLEAT FOR DV14
ACDV19	2	CLEAT FOR DV14
ACDV22	48	CLEAT FOR DV23
ACDV24	2	CHEVRON FOR DV14
ACDV244	1 x (W-90) + 2 x (H-60)	FLIPPER GASKET
ACDV245	1 x (W-62) + 2 x (H-42)	SEALING GASKET
ACDV202	18 x (H-84)	SEALING GASKET
ACDV246	1 x (W-62) + 2 x (H-42)	SEALING GASKET
ACDV225 or 226	3	SHOOTBOLT HANDLE
ACDV227	3	SHOOTBOLT GEARBOX
ACDV228	3 (PAIRS)	SHOOTBOLT ROD
ACDV259	3 (PAIRS)	SHOOTBOLT GUIDE
ACDV230	2	SHOOTBOLT COVER
ACDV231	18	INTERMEDIATE HINGE
ACDV232	2	BOTTOM ROLLER HINGE
ACDV233	2	TOP GUIDE HINGE
ACDV234	2	D-HANDLE/HINGE
ACDV718/9	1	MULTI-POINT LOCK
ACDV251	1 (PAIR)	LEVER HANDLES
ACDV56	2 (PAIRS)	END CAP FOR DV56
ACDV257	3 (SET OF 4)	INFILL BLOCK
ACDV171/3	1 (PAIR)	END CAPS FOR DV171/173
ACMX01603 (SL)	3	HALF CYLINDER
ACDV258	1	50/50 CYLINDER
ACET060	22	SCREW FOR DV56
ACDV241	22	FIXING BLOCK FOR LOCK & KEEPS
ACDV265	22	FIXING SCREW FOR LOCK & KEEPS
ACET069	30	SCREW FOR ACDV225/6 & DV23
ACDR052	52	SCREW FOR DV25 & DV171/3
ACVG31	12 x (W/6-134) + 12 x (H-254)	EXTERNAL GLAZING GASKET
ACVG34	12 x (W/6-134) + 12 x (H-254)	INTERNAL GLAZING GASKET
ACDV249	12 x (W/6-22.5)	WOOLPILE
ACDV261	3 (SET OF 4)	INFILL BLOCK

Note: PCX15 required for master door if leaf height is over 2285mm.

Type 7e

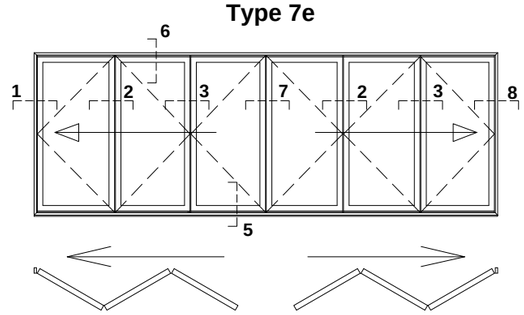

GLASS DEDUCTIONS

DV171	6 x	W/6 - 132	H - 164
DV173	6 x	W/6 - 132	H - 169

IMPORTANT NOTE:
Min. Sash Width 700mm / Max. Vent Width 1000mm
Max. Sash Weight 100kg
Max. Sash Height 2400mm Dependant On Site Conditions
Always Measure In the Last Vent.

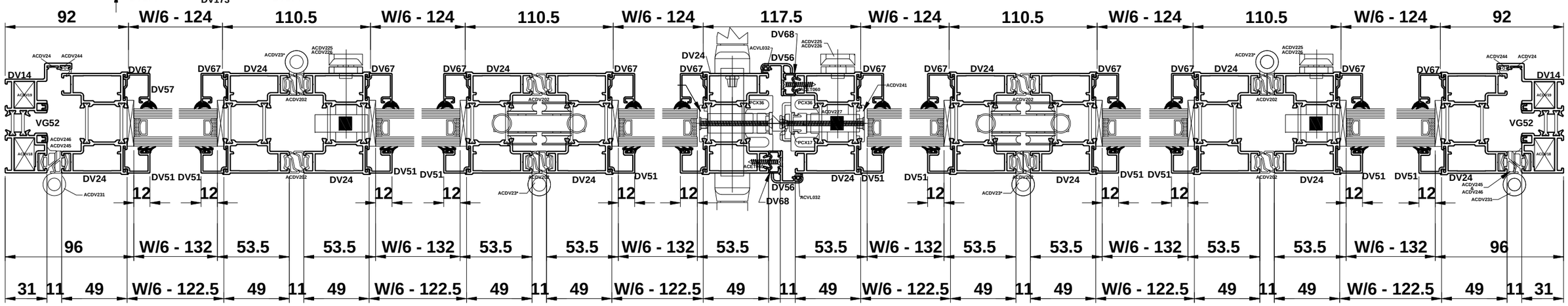

Do Not Scale From This Drawing

Visofold 2000

Single Door With Standard Threshold - Open Out

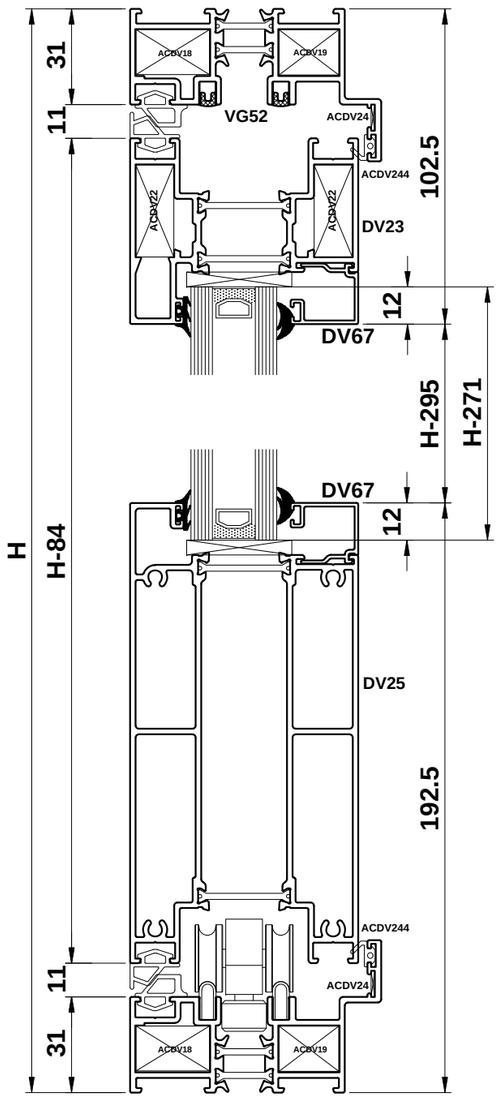

PROFILE CUTTING SCHEDULE

DV14		2		W	
DV14		2		H	
DV23		1		W-182	
DV24		2		H-84	
DV25		1		W-182	
DV51		2		H-295	
DV56		1		H-84	
DV63 or DV67	or	2		W-182	
DV63 or DV67	or	2		H-261	H-295
VG52		4		W-62	
VG52		4		H-62	
PCX36		1		H-84	

Note: PCX15 required for leaf heights over 2285mm.

GLASS SIZES		
	1 X	W - 192
		H - 271.5

IMPORTANT NOTE:
Min. Sash Width 700mm / Max. Vent Width 1000mm
Max. Sash Weight 100kg
Max. Sash Height 2400mm Dependant On Site Conditions
Always Measure In the Last Vent.

ACCESSORIES

ACDV18	4	CLEAT FOR DV14
ACDV19	4	CLEAT FOR DV14
ACDV22	4	CLEAT FOR DV23
ACDV24	4	CHEVRON FOR DV14
ACDV244	2 x (W-90) + 2 x (H-90)	FLIPPER GASKET
ACDV245	2 x (W-62)	SEALING GASKET
ACDV245	1 x (H-84)	SEALING GASKET
ACDV246	2 x (W-84)	SEALING GASKET
ACDV246	1 x (H-84)	SEALING GASKET
ACDV231	4	INTERMEDIATE HINGE
ACDV718/9	1	MULTI-POINT LOCK
ACDV251	1 (PAIR)	LEVER HANDLES
ACDV56	1 (PAIR)	END CAP FOR DV56
ACDV252	1	KEEP GUIDE
ACDV257	1 (SET OF 4)	INFILL BLOCK
ACVL032	1 x (H-84)	DV56 FLIPPER GASKET
ACDV258	1	50/50 CYLINDER
ACET131	2	DRAIN HOLE COVER
ACET060	35	SCREW FOR ACDV252
ACET067	11	SCREW FOR DV56
ACET069	4	DV23
ACDR052	8	SCREW FOR DV25
ACDV241	11	FIXING BLOCK FOR LOCK
ACDV264	11	FIXING SCREW FOR KEEP
ACDV265	11	FIXING SCREW FOR LOCK
ACSG023	11	FIXING BLOCK FOR KEEP
ACVG31	2 x (W-192) + 2 x (H-271)	EXTERNAL GLAZING GASKET
ACVG34	2 x (W-192) + 2 x (H-271)	INTERNAL GLAZING GASKET

Single Door

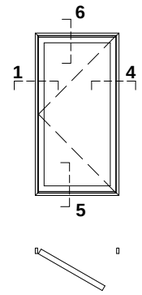

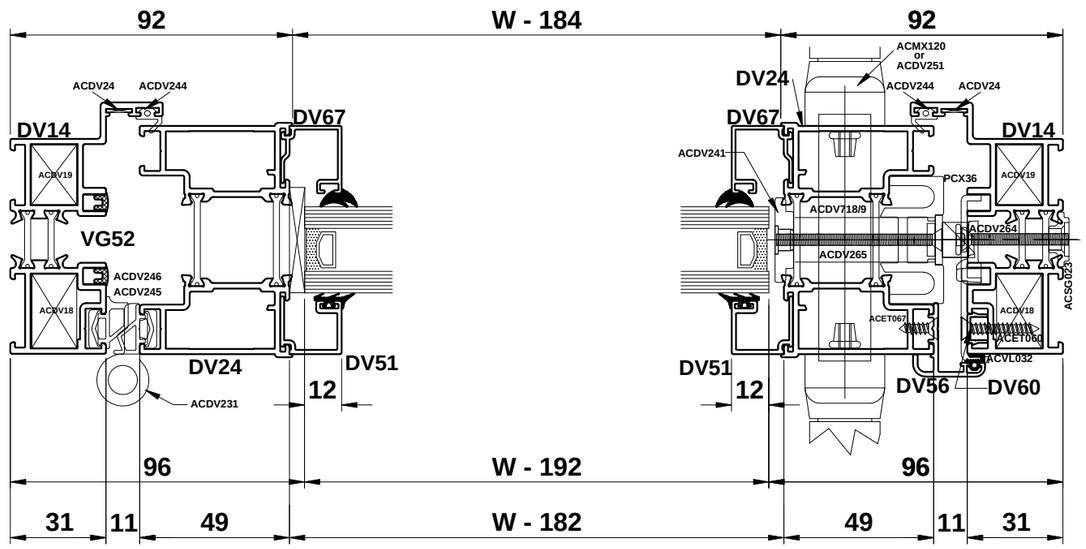

Do Not Scale From This Drawing

Single Door With Low Threshold - Open Out

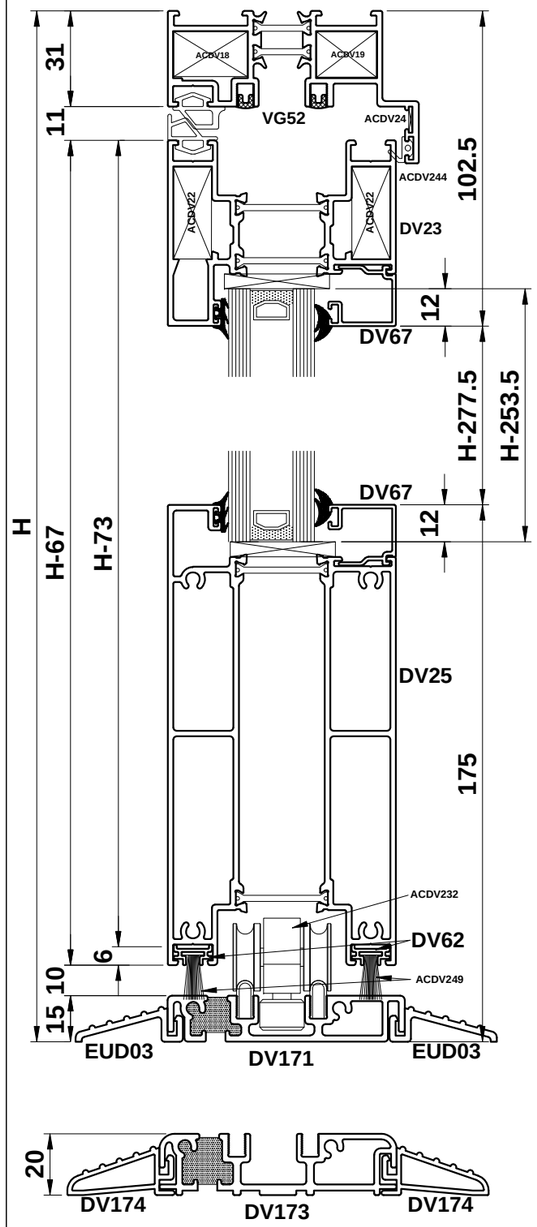

PROFILE CUTTING SCHEDULE (DV171)

DV14		1		W	
DV14		2		H	
DV171		1		W-66	
EUD03		1		W-66	
EUD03		1		W-99	
DV23		1		W-182	
DV24		2		H-73	
DV25		1		W-182	
DV51		2		H-278	
DV56		1		H-73	
DV63 or DV67	or	2		W-184	
DV63 or DV67	or	2		H-244	H-278
DV62		2		W-182	
VG52		4		W-62	
VG52		4		H-42	
PCX36		1		H-73	

PROFILE CUTTING SCHEDULE (DV173)

DV173		1		W-66	
DV174		1		W-66	
DV174		1		W-99	
DV24		2		H-78	
DV51		2		H-283	
DV56		1		H-78	
DV63 or DV67	or	2		H-249	H-283
DV60		1		H-51	
PCX36		1		H-78	

Note: PCX15 required for leaf heights over 2285mm.

ACCESSORIES

ACDV18	4	CLEAT FOR DV14
ACDV19	4	CLEAT FOR DV14
ACDV22	4	CLEAT FOR DV23
ACDV24	4	CHEVRON FOR DV14
ACDV244	1 x (W-90) + 2 x (H-60)	FLIPPER GASKET
ACDV245	1 x (W-62)	SEALING GASKET
ACDV245	1 x (H-84)	SEALING GASKET
ACDV246	1 x (W-84)	SEALING GASKET
ACDV246	1 x (H-84)	SEALING GASKET
ACDV249	1 x (W-182)	WOOLPILE
ACDV231	4	INTERMEDIATE HINGE
ACDV718/9	1	MULTI-POINT LOCK
ACDV251	1 (PAIR)	LEVER HANDLES
ACDV56	1 (PAIR)	END CAP FOR DV56
ACDV252	1	KEEP GUIDE
ACDV257	1 (SET OF 4)	INFILL BLOCK
ACVL032	1 x (H-84)	DV56 FLIPPER GASKET
ACDV258	1	50/50 CYLINDER
ACET131	2	DRAIN HOLE COVER
ACET060	2	SCREW FOR ACDV252
ACET067	11	SCREW FOR DV56
ACET069	4	DV23
ACDR052	12	SCREW FOR DV25
ACDV241	11	FIXING BLOCK FOR LOCK
ACDV264	11	FIXING SCREW FOR KEEP
ACDV265	11	FIXING SCREW FOR LOCK
ACSG023	11	FIXING BLOCK FOR KEEP
ACVG31	2 x (W-192) + 2 x (H-254)	EXTERNAL GLAZING GASKET
ACVG34	2 x (W-192) + 2 x (H-254)	INTERNAL GLAZING GASKET
ACDV261	1 (SET OF 4)	INFILL BLOCK
ACDV171/3	1 (PAIR)	END CAPS FOR DV171/173

Single Door

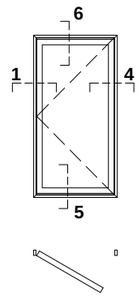

GLASS DEDUCTIONS

DV171	1 x	W - 192	H - 253.5
DV173	1 x	W - 192	H - 258.5

IMPORTANT NOTE:
Min. Sash Width 700mm / Max. Vent Width 1000mm
Max. Sash Weight 100kg
Max. Sash Height 2400mm Dependant On Site Conditions
Always Measure In the Last Vent.

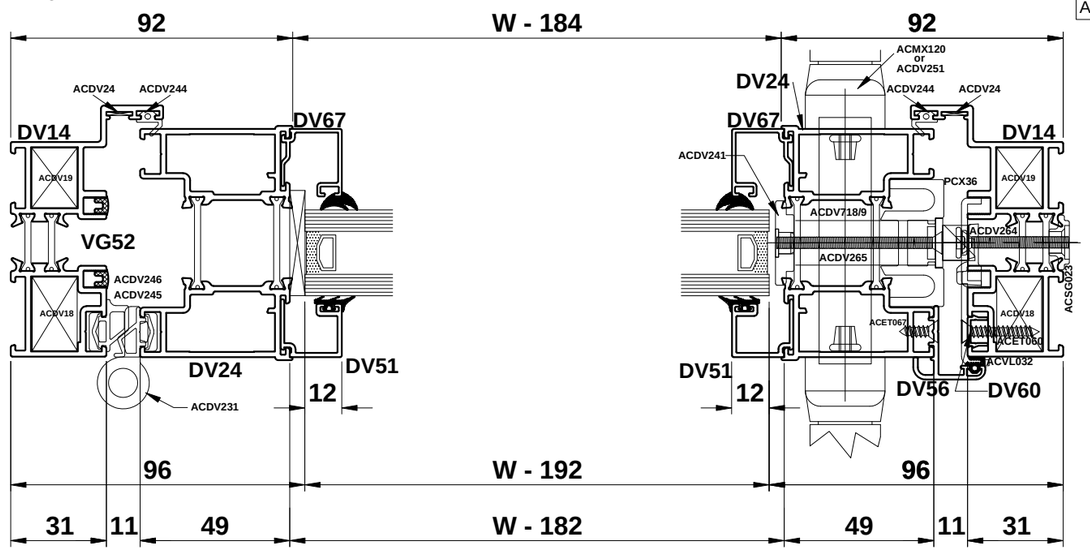

Do Not Scale From This Drawing

Single Door With DV23 & Standard Threshold - Open Out

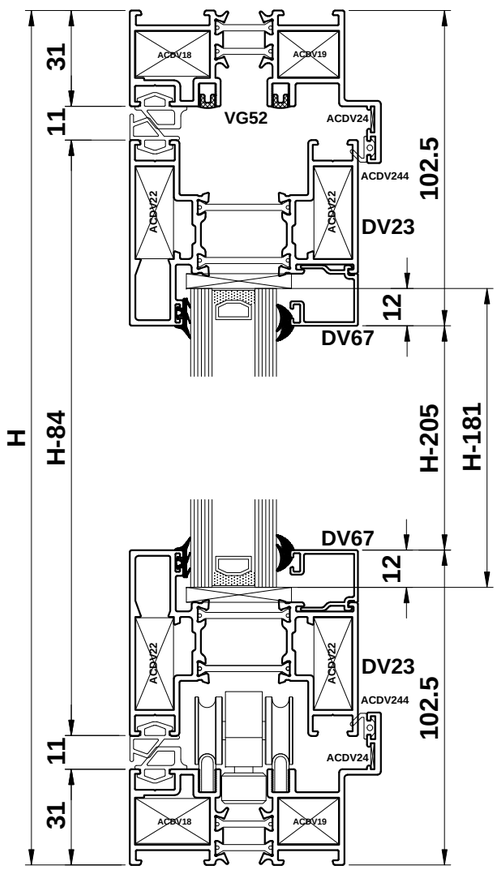

DV14		2		W	
DV14		2		H	
DV23		2		W-182	
DV24		2		H-84	
DV51		2		H-205	
DV56		1		H-84	
DV63 or DV67	or	2		W-182	
DV63 or DV67	or	2		H-239	H-205
VG52		4		W-62	
VG52		4		H-62	
PCX36		1		H-84	

Note: PCX15 required for leaf heights over 2285mm.

GLASS SIZES		
	1 X	W - 192
		H - 181

IMPORTANT NOTE:
Min. Sash Width 700mm / Max. Vent Width 1000mm
Max. Sash Weight 100kg
Max. Sash Height 2400mm Dependant On Site Conditions
Always Measure In the Last Vent.

ACDV18	4	CLEAT FOR DV14
ACDV19	4	CLEAT FOR DV14
ACDV22	8	CLEAT FOR DV23
ACDV24	4	CHEVRON FOR DV14
ACDV244	2 x (W-90) + 2 x (H-90)	FLIPPER GASKET
ACDV245	2 x (W-62) + 1 x (H-62)	SEALING GASKET
ACDV245	1 x (H-84)	SEALING GASKET
ACDV246	2 x (W-84)	SEALING GASKET
ACDV246	1 x (H-84)	SEALING GASKET
ACDV231	4	INTERMEDIATE HINGE
ACDV718/9	1	MULTI-POINT LOCK
ACDV251	1 (PAIR)	LEVER HANDLES
ACDV56	1 (PAIR)	END CAP FOR DV56
ACDV252	1	KEEP GUIDE
ACDV257	1 (SET OF 4)	INFILL BLOCK
ACVL032	1 x (H-84)	DV56 FLIPPER GASKET
ACDV258	1	50/50 CYLINDER
ACET131	2	DRAIN HOLE COVER
ACET060	35	SCREW FOR ACDV252
ACET067	11	SCREW FOR DV56
ACET069	4	DV23
ACDR052	8	SCREW FOR DV25
ACDV241	11	FIXING BLOCK FOR LOCK
ACDV264	11	FIXING SCREW FOR KEEP
ACDV265	11	FIXING SCREW FOR LOCK
ACSG023	11	FIXING BLOCK FOR KEEP
ACVG31	2 x (W-192) + 2 x (H-271)	EXTERNAL GLAZING GASKET
ACVG34	2 x (W-192) + 2 x (H-271)	INTERNAL GLAZING GASKET

Single Door

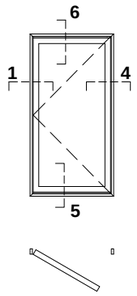

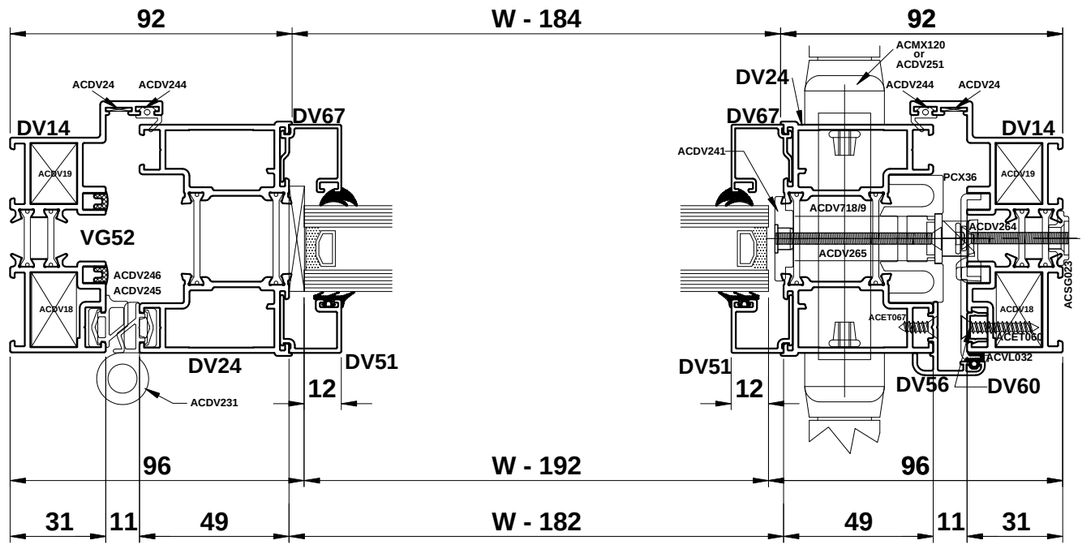

Do Not Scale From This Drawing

Single Door With DV23 & Low Threshold - Open Out

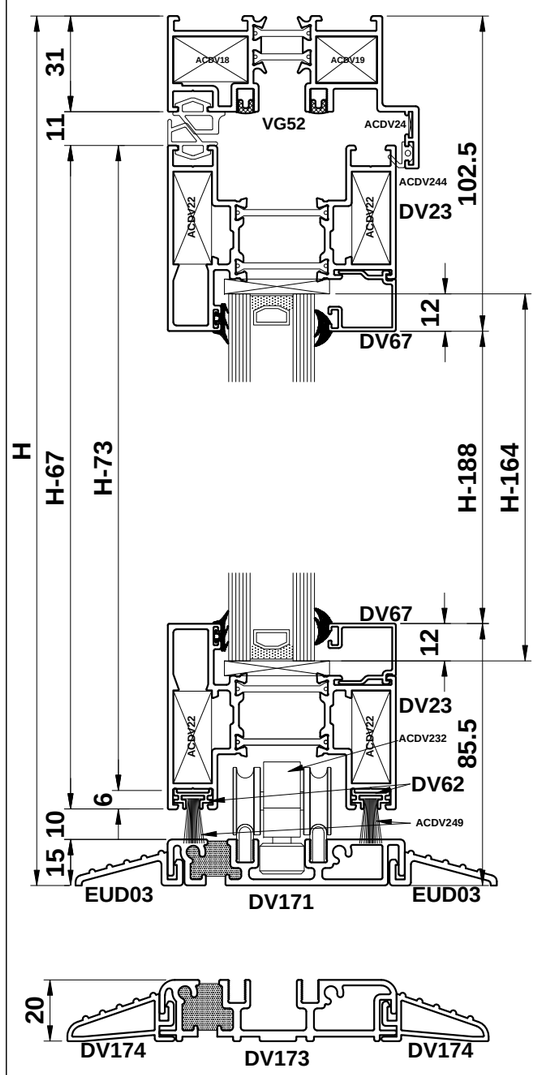

PROFILE CUTTING SCHEDULE (DV171)

DV14		1		W	
DV14		2		H	
DV171		1		W-66	
EUD03		1		W-66	
EUD03		1		W-99	
DV23		1		W-182	
DV24		2		H-73	
DV25		1		W-182	
DV51		2		H-188	
DV56		1		H-73	
DV63 or DV67	or	2		W-184	
DV63 or DV67	or	2		H-222	H-188
DV62		2		W-182	
VG52		4		W-62	
VG52		4		H-42	
PCX36		1		H-73	

PROFILE CUTTING SCHEDULE (DV173)

DV173		1		W-66	
DV174		1		W-66	
DV174		1		W-99	
DV24		2		H-78	
DV51		2		H-283	
DV56		1		H-78	
DV63 or DV67	or	2		H-249	H-283
DV60		1		H-51	
PCX36		1		H-78	

Note: PCX15 required for leaf heights over 2285mm.

ACCESSORIES

ACDV18	4	CLEAT FOR DV14
ACDV19	4	CLEAT FOR DV14
ACDV22	8	CLEAT FOR DV23
ACDV24	4	CHEVRON FOR DV14
ACDV244	1 x (W-90) + 2 x (H-60)	FLIPPER GASKET
ACDV245	1 x (W-62)	SEALING GASKET
ACDV245	1 x (H-73)	SEALING GASKET
ACDV246	2 x (W-73)	SEALING GASKET
ACDV246	1 x (H-73)	SEALING GASKET
ACDV249	1 x (W-182)	WOOLPILE
ACDV231	4	INTERMEDIATE HINGE
ACDV718/9	1	MULTI-POINT LOCK
ACDV251	1 (PAIR)	LEVER HANDLES
ACDV56	1 (PAIR)	END CAP FOR DV56
ACDV252	1	KEEP GUIDE
ACDV257	1 (SET OF 4)	INFILL BLOCK
ACVL032	1 x (H-84)	DV56 FLIPPER GASKET
ACDV258	1	50/50 CYLINDER
ACET131	2	DRAIN HOLE COVER
ACET060	2	SCREW FOR ACDV252
ACET067	11	SCREW FOR DV56
ACET069	4	DV23
ACDR052	12	SCREW FOR DV25
ACDV241	11	FIXING BLOCK FOR LOCK
ACDV264	11	FIXING SCREW FOR KEEP
ACDV265	11	FIXING SCREW FOR LOCK
ACSG023	11	FIXING BLOCK FOR KEEP
ACVG31	2 x (W-192) + 2 x (H-254)	EXTERNAL GLAZING GASKET
ACVG34	2 x (W-192) + 2 x (H-254)	INTERNAL GLAZING GASKET
ACDV261	1 (SET OF 4)	INFILL BLOCK
ACDV171/3	1 (PAIR)	END CAPS FOR DV171/173

Single Door

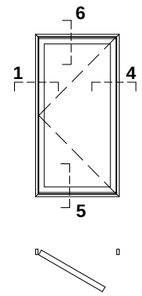

GLASS DEDUCTIONS

DV171	1 x	W - 192	H - 164
DV173	1 x	W - 192	H - 169

IMPORTANT NOTE:
Min. Sash Width 700mm / Max. Vent Width 1000mm
Max. Sash Weight 100kg
Max. Sash Height 2400mm Dependant On Site Conditions
Always Measure In the Last Vent.

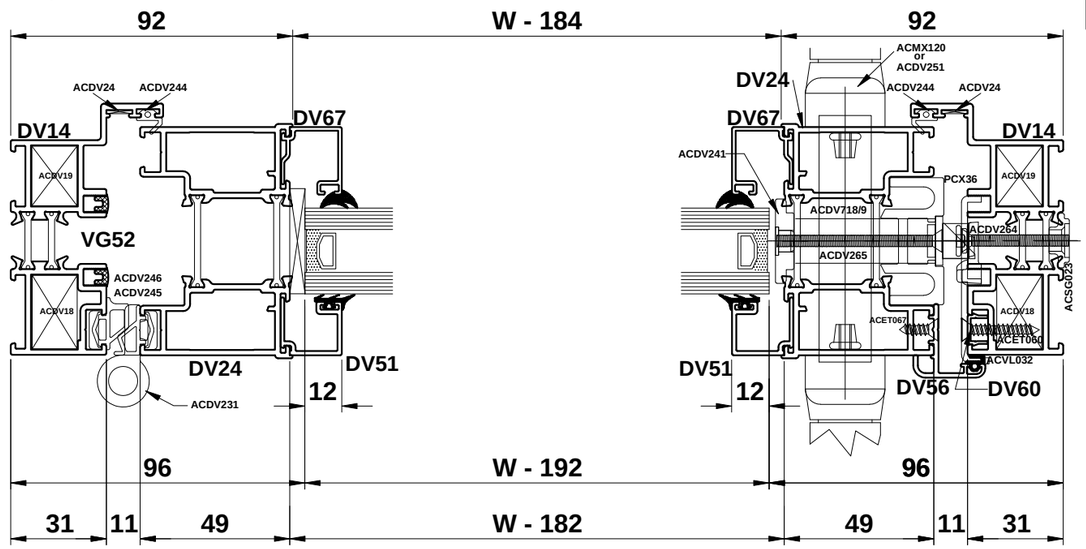

Do Not Scale From This Drawing

Double Door With Standard Threshold - Open Out

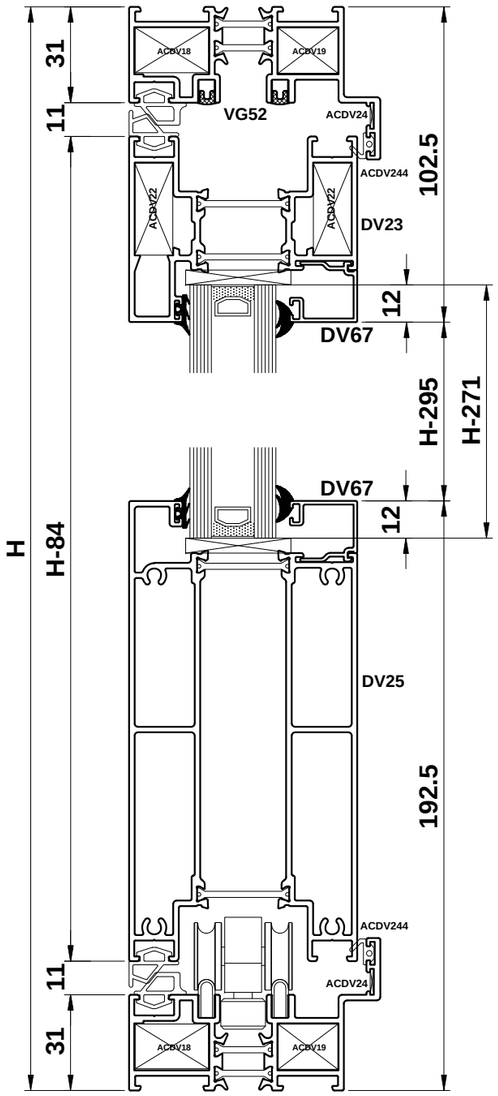

PROFILE CUTTING SCHEDULE

DV14		2		W	
DV14		2		H	
DV23		2		W/2-150	
DV24		4		H-84	
DV25		2		W/2-150	
DV51		4		H-295	
DV56		2		H-84	
DV63 or DV67	or	4		W/2-152	
DV63 or DV67	or	4		H-261	H-295
VG52		4		W-62	
VG52		4		H-62	
PCX36		2		H-84	
DV68		2		H-84	
PCX15		1		H-84	

Note: PCX15 required for master door if leaf height is over 2285mm.

GLASS SIZES		
	2 X	W/2 - 159.5
		H - 271.5

ACCESSORIES

ACDV18	4	CLEAT FOR DV14
ACDV19	4	CLEAT FOR DV14
ACDV22	8	CLEAT FOR DV23
ACDV24	4	CHEVRON FOR DV14
ACDV225 or 226	1	SHOOTBOLT HANDLE
ACDV227	1	SHOOTBOLT GEARBOX
ACDV228	1 (PAIR)	SHOOTBOLT ROD
ACDV259	1 (PAIR)	SHOOTBOLT GUIDE
ACDV244	2 x (W-90) + 2 x (H-90)	FLIPPER GASKET
ACDV245	2 x (W-62)	SEALING GASKET
ACDV245	2 x (H-84)	SEALING GASKET
ACDV246	2 x (W/2-150)	SEALING GASKET
ACDV246	2 x (H-84)	SEALING GASKET
ACDV231	8	INTERMEDIATE HINGE
ACDV718/9	1	MULTI-POINT LOCK
ACDV251	1 (PAIR)	LEVER HANDLES
ACDV56	1 (PAIR)	END CAP FOR DV56
ACDV257	2 (SET OF 4)	INFILL BLOCK
ACVL032	2 x (H-84)	DV56 FLIPPER GASKET
ACDV258 (SL)	1	50/50 CYLINDER
ACET131	2	DRAIN HOLE COVER
ACET060	22	SCREW FOR DV56
ACET069	6	SCREW FOR DV23 & ACDV225/6
ACDR052	16	SCREW FOR DV25
ACDV241	22	FIXING BLOCK FOR LOCK & KEEPS
ACDV265	22	FIXING SCREW FOR LOCK & KEEPS
ACVG31	2 x (W-192) + 2 x (H-271)	EXTERNAL GLAZING GASKET
ACVG34	2 x (W-192) + 2 x (H-271)	INTERNAL GLAZING GASKET
ACMX01603 (SL)	1	HALF CYLINDER

Double Door

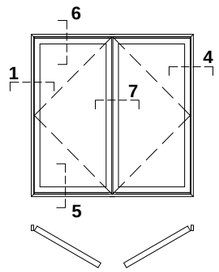

IMPORTANT NOTE:
Min. Sash Width 700mm / Max. Vent Width 1000mm
Max. Sash Weight 100kg
Max. Sash Height 2400mm Dependant On Site Conditions
Always Measure In the Last Vent.

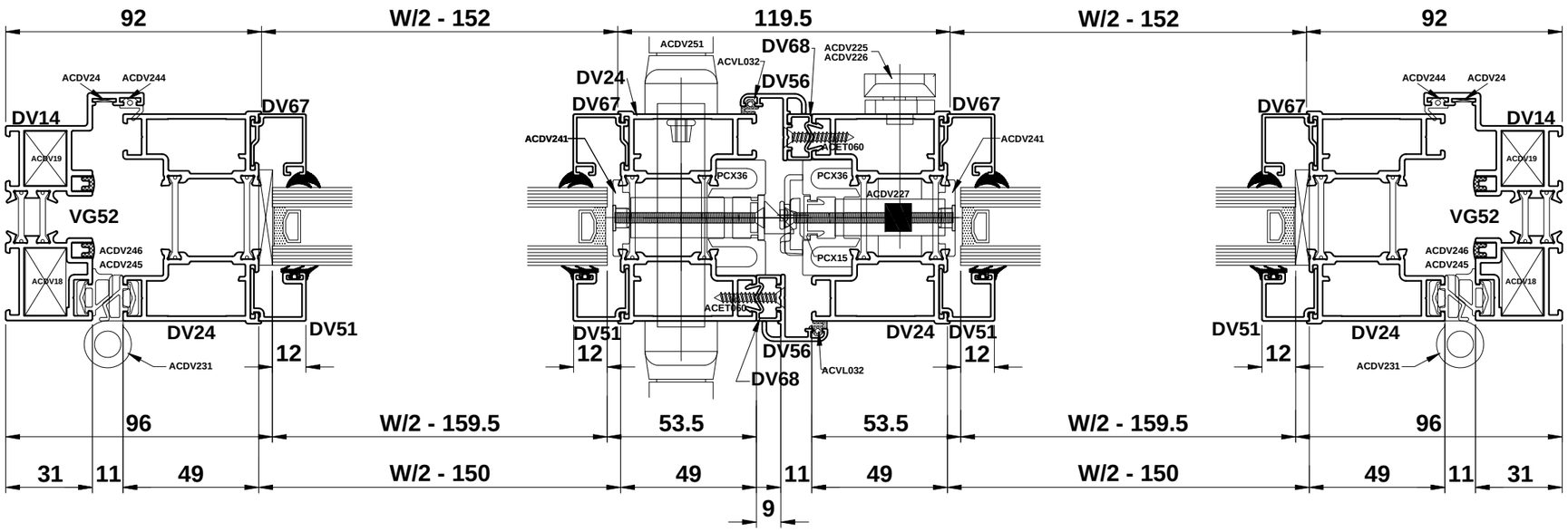

Do Not Scale From This Drawing

Visofold 2000

Double Door With DV23 & Low Threshold - Open Out

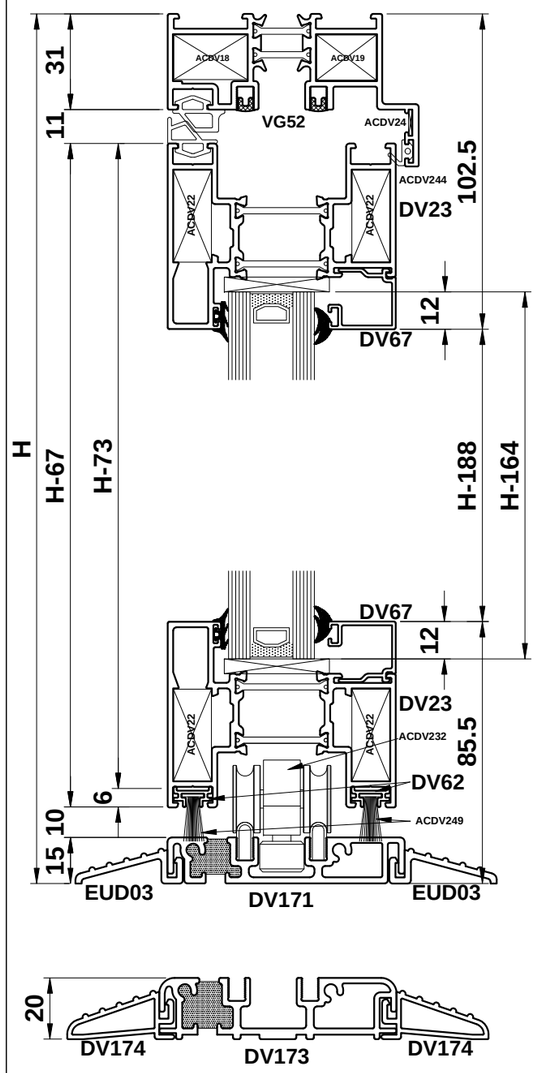

PROFILE CUTTING SCHEDULE (DV171)

DV14		1		W	
DV14		2		H	
DV171		1		W-66	
EUD03		1		W-66	
EUD03		1		W-99	
DV23		4		W/2-150	
DV24		4		H-73	
DV51		4		H-278	
DV56		2		H-73	
DV63 or DV67	or	4		W/2-152	
DV63 or DV67	or	4		H-244	H-278
DV62		2		W/2-150	
VG52		4		W-62	
VG52		4		H-42	
PCX36		2		H-73	
DV68		2		H-73	
PCX15		1		H-73	

Note: PCX15 required for master door if leaf height

IMPORTANT NOTE:
Min. Sash Width 700mm / Max. Vent Width 1000mm
Max. Sash Weight 100kg
Max. Sash Height 2400mm Dependant On Site Conditions
Always Measure In the Last Vent.

PROFILE CUTTING SCHEDULE (DV173)

DV173		1		W-66	
DV174		1		W-66	
DV174		1		W-99	
DV24		4		H-78	
DV51		4		H-283	
DV56		2		H-78	
DV63 or DV67	or	4		H-249	H-283
PCX36		2		H-78	
DV68		2		H-78	
PCX15		1		H-78	

DV171	2 x	W - 159.5	H - 164
DV173	2 x	W - 159.5	H - 164

Double Door

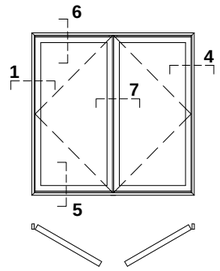

ACCESSORIES

ACDV18	4	CLEAT FOR DV14
ACDV19	4	CLEAT FOR DV14
ACDV22	16	CLEAT FOR DV23
ACDV24	4	CHEVRON FOR DV14
ACDV225 or 226	1	SHOOTBOLT HANDLE
ACDV227	1	SHOOTBOLT GEARBOX
ACDV228	1 (PAIR)	SHOOTBOLT ROD
ACDV259	1 (PAIR)	SHOOTBOLT GUIDE
ACDV244	1 x (W-90) + 2 x (H-90)	FLIPPER GASKET
ACDV245	1 x (W-62)	SEALING GASKET
ACDV245	2 x (H-84)	SEALING GASKET
ACDV246	1 x (W/2-150)	SEALING GASKET
ACDV246	2 x (H-84)	SEALING GASKET
ACDV249	1 x (W/2-150)	WOOLPILE
ACDV231	8	INTERMEDIATE HINGE
ACDV718/9	1	MULTI-POINT LOCK
ACDV251	1 (PAIR)	LEVER HANDLES
ACDV56	1 (PAIR)	END CAP FOR DV56
ACDV257	1 (SET OF 4)	INFILL BLOCK
ACVL032	2 x (H-84)	DV56 FLIPPER GASKET
ACDV258 (SL)	1	50/50 CYLINDER
ACET131	2	DRAIN HOLE COVER
ACET060	22	SCREW FOR DV56
ACET069	6	SCREW FOR DV23 & ACDV225/6
ACDR052	4	SCREW FOR DV25 & DV171/3
ACDV241	22	FIXING BLOCK FOR LOCK & KEEPS
ACDV265	22	FIXING SCREW FOR LOCK & KEEPS
ACVG31	2 x (W-192) + 2 x (H-271)	EXTERNAL GLAZING GASKET
ACVG34	2 x (W-192) + 2 x (H-271)	INTERNAL GLAZING GASKET
ACMX01603 (SL)	1	HALF CYLINDER
ACDV261	1 (SET OF 4)	INFILL BLOCK
ACDV171/3	1 (PAIR)	END CAPS FOR DV171/173

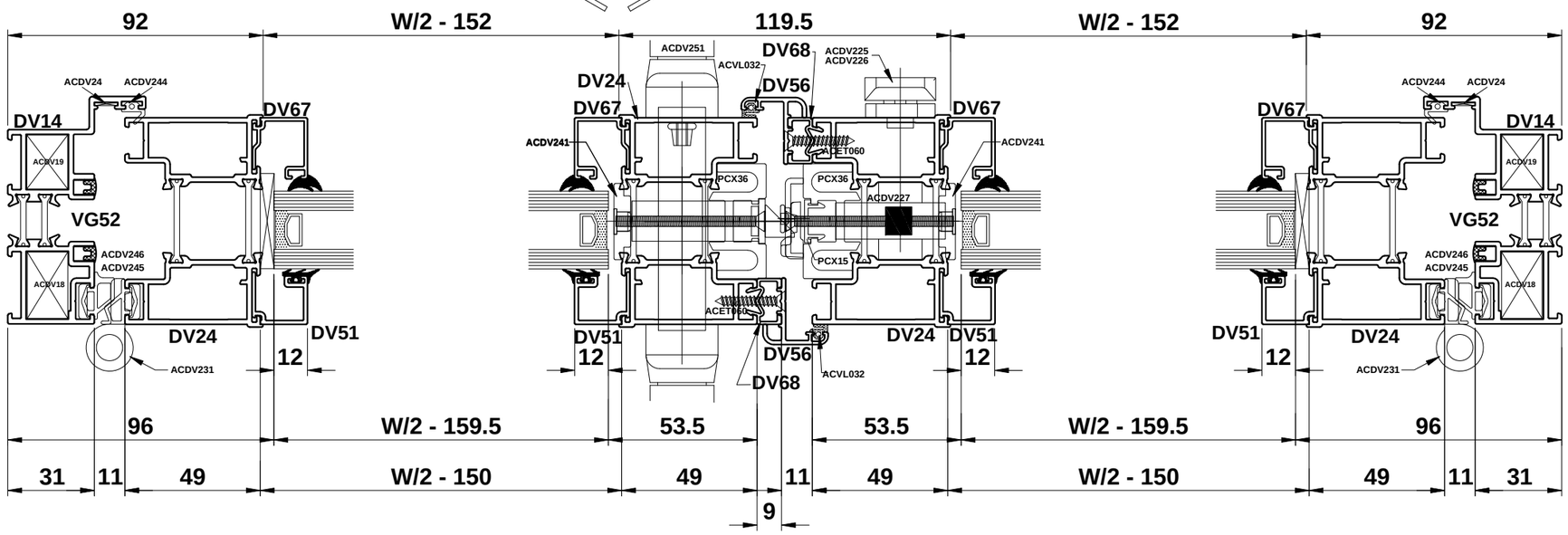

Do Not Scale From This Drawing

Double Door With DV23 & Standard Threshold - Open Out

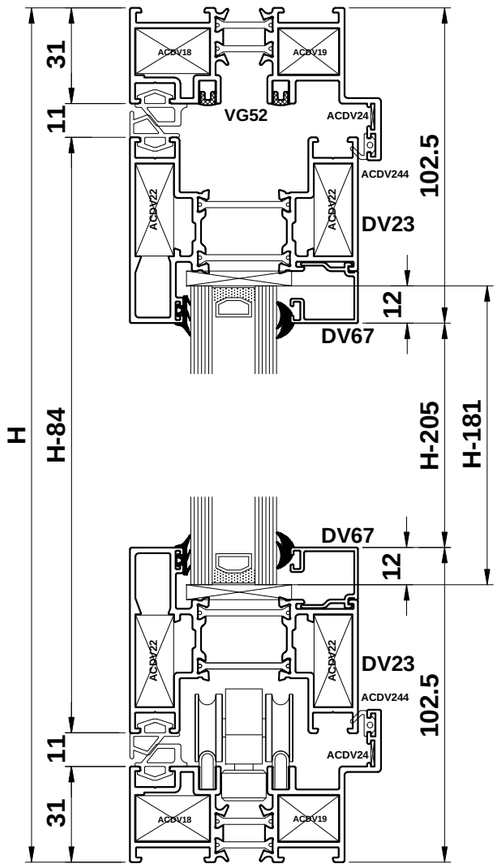

PROFILE CUTTING SCHEDULE

DV14		2		W	
DV14		2		H	
DV23		4		W/2-150	
DV24		4		H-84	
DV51		4		H-205	
DV56		2		H-84	
DV63 or DV67	or	4		W-182	
DV63 or DV67	or	4		H-239	H-205
VG52		4		W-62	
VG52		4		H-62	
PCX36		2		H-84	
DV68		2		H-84	
PCX15		1		H-84	

Note: PCX15 required for master door if leaf height is over 2285mm.

GLASS SIZES		
2 X	W/2 - 152	
	H - 181	

IMPORTANT NOTE:
Min. Sash Width 700mm / Max. Vent Width 1000mm
Max. Sash Weight 100kg
Max. Sash Height 2400mm Dependant On Site Conditions
Always Measure In the Last Vent.

ACCESSORIES

ACDV18	4	CLEAT FOR DV14
ACDV19	4	CLEAT FOR DV14
ACDV22	16	CLEAT FOR DV23
ACDV24	4	CHEVRON FOR DV14
ACDV225 or 226	1	SHOOTBOLT HANDLE
ACDV227	1	SHOOTBOLT GEARBOX
ACDV228	1 (PAIR)	SHOOTBOLT ROD
ACDV259	1 (PAIR)	SHOOTBOLT GUIDE
ACDV244	2 x (W-90) + 2 x (H-90)	FLIPPER GASKET
ACDV245	2 x (W-62)	SEALING GASKET
ACDV245	2 x (H-84)	SEALING GASKET
ACDV246	2 x (W/2-150)	SEALING GASKET
ACDV246	2 x (H-84)	SEALING GASKET
ACDV231	8	INTERMEDIATE HINGE
ACDV718/9	1	MULTI-POINT LOCK
ACDV251	1 (PAIR)	LEVER HANDLES
ACDV56	1 (PAIR)	END CAP FOR DV56
ACDV257	2 (SET OF 4)	INFILL BLOCK
ACVL032	2 x (H-84)	DV56 FLIPPER GASKET
ACDV258 (SL)	1	50/50 CYLINDER
ACET131	2	DRAIN HOLE COVER
ACET060	22	SCREW FOR DV56
ACET069	6	SCREW FOR DV23 & ACDV225/6
ACDR052	4	SCREW FOR DV25
ACDV241	22	FIXING BLOCK FOR LOCK & KEEPS
ACDV265	22	FIXING SCREW FOR LOCK & KEEPS
ACVG31	2 x (W-192) + 2 x (H-271)	EXTERNAL GLAZING GASKET
ACVG34	2 x (W-192) + 2 x (H-271)	INTERNAL GLAZING GASKET
ACMX01603 (SL)	1	HALF CYLINDER

Double Door

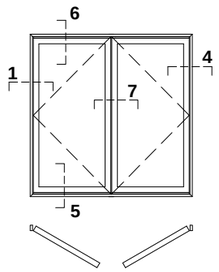

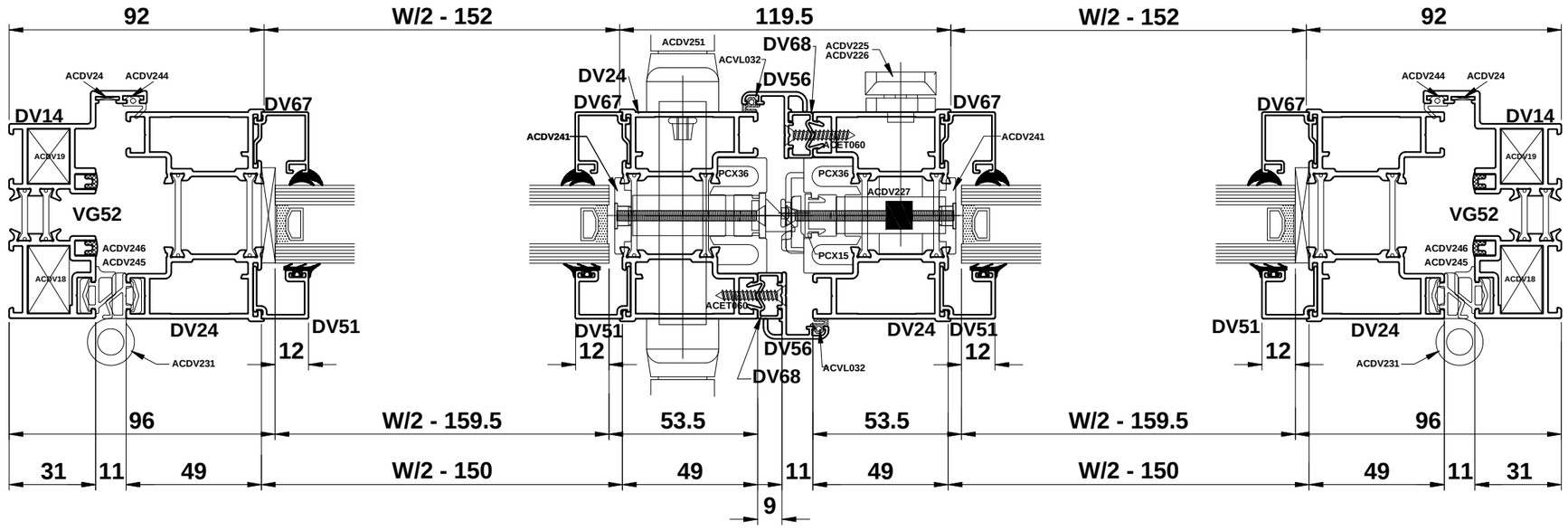

Do Not Scale From This Drawing

Visofold 2000

Double Door With DV23 & Low Threshold - Open Out

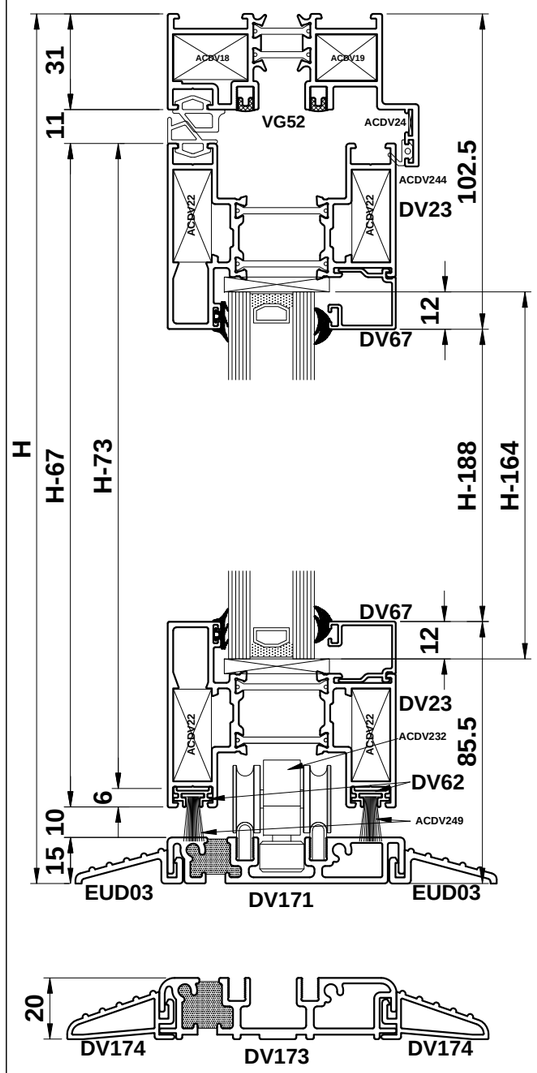

PROFILE CUTTING SCHEDULE (DV171)

DV14		1		W	
DV14		2		H	
DV171		1		W-66	
EUD03		1		W-66	
EUD03		1		W-99	
DV23		4		W/2-150	
DV24		4		H-73	
DV51		4		H-278	
DV56		2		H-73	
DV63 or DV67	or	4		W/2-152	
DV63 or DV67	or	4		H-244	H-278
DV62		2		W/2-150	
VG52		4		W-62	
VG52		4		H-42	
PCX36		2		H-73	
DV68		2		H-73	
PCX15		1		H-73	

Note: PCX15 required for master door if leaf height

IMPORTANT NOTE:
Min. Sash Width 700mm / Max. Vent Width 1000mm
Max. Sash Weight 100kg
Max. Sash Height 2400mm Dependant On Site Conditions
Always Measure In the Last Vent.

PROFILE CUTTING SCHEDULE (DV173)

DV173		1		W-66	
DV174		1		W-66	
DV174		1		W-99	
DV24		4		H-78	
DV51		4		H-283	
DV56		2		H-78	
DV63 or DV67	or	4		H-249	H-283
PCX36		2		H-78	
DV68		2		H-78	
PCX15		1		H-78	

DV171	2 x	W - 159.5	H - 164
DV173	2 x	W - 159.5	H - 164

Double Door

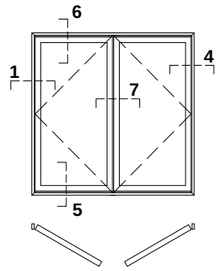

ACCESSORIES

ACDV18	4	CLEAT FOR DV14
ACDV19	4	CLEAT FOR DV14
ACDV22	16	CLEAT FOR DV23
ACDV24	4	CHEVRON FOR DV14
ACDV225 or 226	1	SHOOTBOLT HANDLE
ACDV227	1	SHOOTBOLT GEARBOX
ACDV228	1 (PAIR)	SHOOTBOLT ROD
ACDV259	1 (PAIR)	SHOOTBOLT GUIDE
ACDV244	1 x (W-90) + 2 x (H-90)	FLIPPER GASKET
ACDV245	1 x (W-62)	SEALING GASKET
ACDV245	2 x (H-84)	SEALING GASKET
ACDV246	1 x (W/2-150)	SEALING GASKET
ACDV246	2 x (H-84)	SEALING GASKET
ACDV249	1 x (W/2-150)	WOOLPILE
ACDV231	8	INTERMEDIATE HINGE
ACDV718/9	1	MULTI-POINT LOCK
ACDV251	1 (PAIR)	LEVER HANDLES
ACDV56	1 (PAIR)	END CAP FOR DV56
ACDV257	1 (SET OF 4)	INFILL BLOCK
ACVL032	2 x (H-84)	DV56 FLIPPER GASKET
ACDV258 (SL)	1	50/50 CYLINDER
ACET131	2	DRAIN HOLE COVER
ACET060	22	SCREW FOR DV56
ACET069	6	SCREW FOR DV23 & ACDV225/6
ACDR052	4	SCREW FOR DV25 & DV171/3
ACDV241	22	FIXING BLOCK FOR LOCK & KEEPS
ACDV265	22	FIXING SCREW FOR LOCK & KEEPS
ACVG31	2 x (W-192) + 2 x (H-271)	EXTERNAL GLAZING GASKET
ACVG34	2 x (W-192) + 2 x (H-271)	INTERNAL GLAZING GASKET
ACMX01603 (SL)	1	HALF CYLINDER
ACDV261	1 (SET OF 4)	INFILL BLOCK
ACDV171/3	1 (PAIR)	END CAPS FOR DV171/173

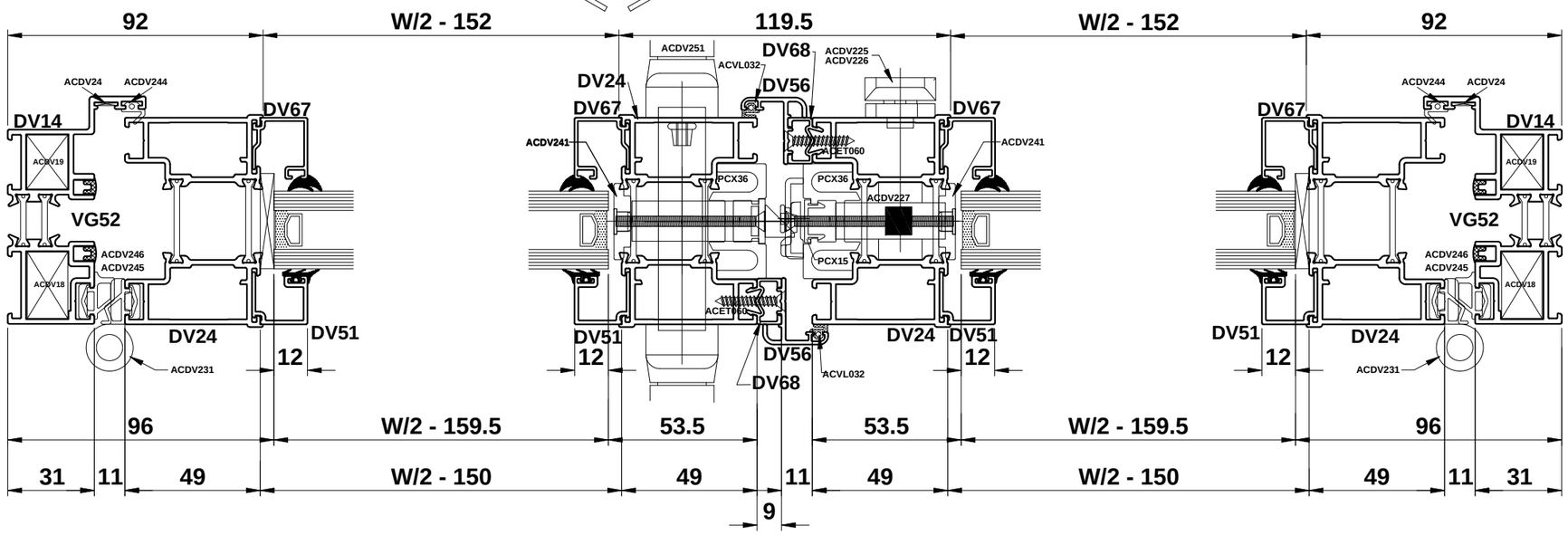

Do Not Scale From This Drawing

Type 2i With Rebated Threshold - Open In

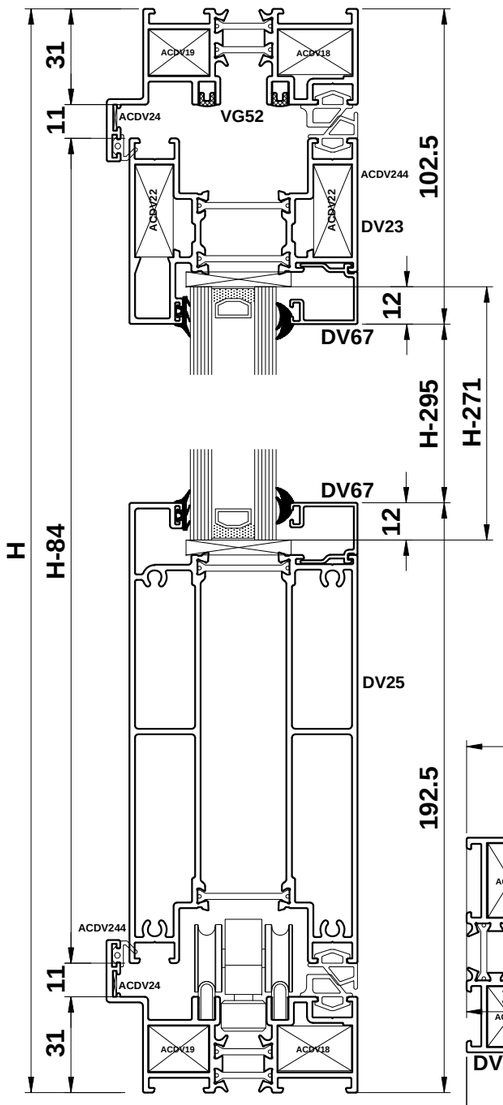

PROFILE CUTTING SCHEDULE

DV14		2		W	
DV14		2		H	
DV23		3		W/3-133.5	
DV24		6		H-84	
DV25		3		W/3-133.5	
DV51		6		H-295	
DV56		1		H-84	
DV63 or DV67	or	6		W/3-135	
DV63 or DV67	or	6		H-261	H-295
DV60		1		H-62	
VG52		2		W-62	
VG52		4		H-62	
VG53		2		W-62	
PCX36		1		H-84	

Note: PCX15 required for leaf heights over 2285mm.

GLASS SIZES		
	3 X	W/3 - 142.5
		H - 271

IMPORTANT NOTE:
Min. Sash Width 700mm / Max. Vent Width 1000mm
Max. Sash Weight 100kg
Max. Sash Height 2400mm Dependant On Site Conditions
Always Measure In the Last Vent.

ACCESSORIES

ACDV18	4	CLEAT FOR DV14
ACDV19	4	CLEAT FOR DV14
ACDV22	12	CLEAT FOR DV23
ACDV24	4	CHEVRON FOR DV14
ACDV244	2 x (W-90) + 2 x (H-90)	FLIPPER GASKET
ACDV245	2 x (W-62) + 1 x (H-62)	SEALING GASKET
ACDV202	8 x (H-84)	SEALING GASKET
ACDV246	2 x (W-62) + 1 x (H-62)	SEALING GASKET
ACDV225 or 226	1	SHOOTBOLT HANDLE
ACDV227	1	SHOOTBOLT GEARBOX
ACDV228	1 (PAIR)	SHOOTBOLT ROD
ACDV259	1 (PAIR)	SHOOTBOLT GUIDE
ACDV230	1	SHOOTBOLT COVER
ACDV231	10	INTERMEDIATE HINGE
ACDV232	1	BOTTOM ROLLER HINGE
ACDV233	1	TOP GUIDE HINGE
ACDV274	1	D-HANDLE
ACDV718/9	1	MULTI-POINT LOCK
ACDV251	1 (PAIR)	LEVER HANDLES
ACDV56	1 (PAIR)	END CAP FOR DV56
ACDV252	1	KEEP GUIDE
ACDV257	3 (SET OF 4)	INFILL BLOCK
ACMX01603 (SL)	1	HALF CYLINDER
ACDV258 (SL)	1	50/50 CYLINDER
ACET131	2	DRAIN HOLE COVER
ACDV264	11	SCREW FOR KEEPS
ACDV265	11	SCREW FOR LOCK
ACSG023	11	FIXING BLOCK FOR KEEPS
ACDV241	11	FIXING BLOCK FOR LOCK
ACET060	2	SCREW FOR ACDV252
ACET067	11	SCREW FOR DV56
ACET069	14	SCREW FOR ACDV225/6 & DV23

ACDR052	24	SCREW FOR DV25
ACVG31	6 x (W/3-142) + 6 x (H-272)	EXTERNAL GLAZING GASKET
ACVG34	6 x (W/3-142) + 6 x (H-272)	INTERNAL GLAZING GASKET
ACVL032	1 x (H-67)	DV56 FLIPPER GASKET

Type 2i

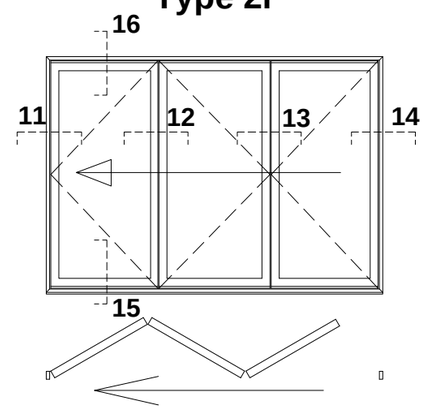

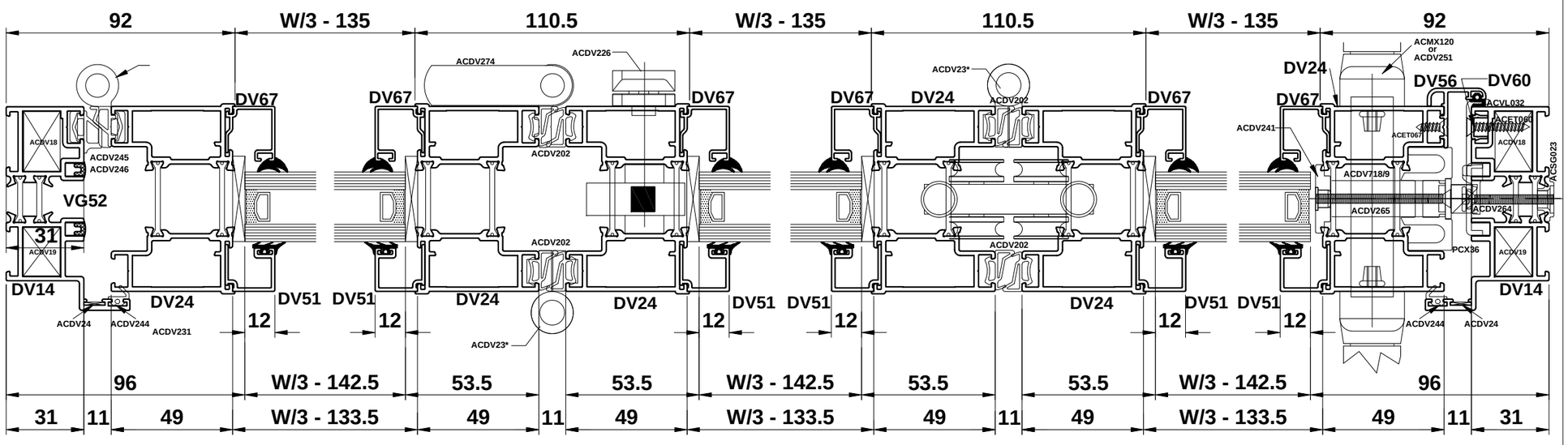

Do Not Scale From This Drawing

Visofold 2000

Type 2i With Low Threshold - Open In

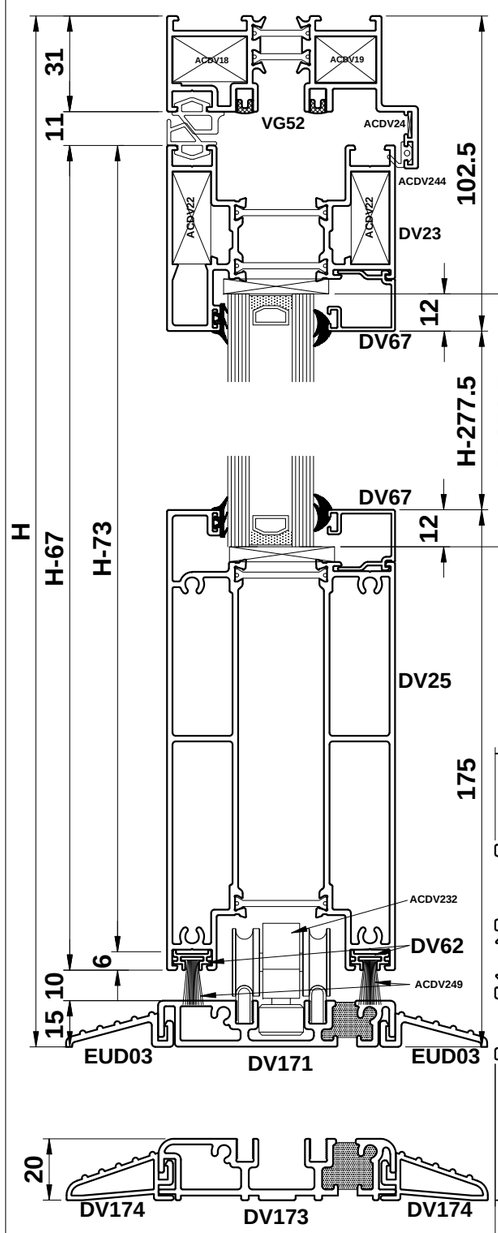

PROFILE CUTTING SCHEDULE (DV171)

DV14		1		W
DV14		2		H
DV171		1		W-66
EUD03		1		W-66
EUD03		1		W-99
DV23		3		W/3-133.5
DV24		6		H-73
DV25		3		W/3-133.5
DV51		6		H-278
DV56		1		H-73
DV63 or DV67	or	6		W/3-135
DV63 or DV67	or	6		H-244 / H-278
DV60		1		H-46
DV62		6		W/3-133.5
VG52		2		W-62
VG52		4		H-42
VG53		2		W-66
PCX36		1		H-73

PROFILE CUTTING SCHEDULE (DV173)

DV173		1		W-66
DV174		1		W-66
DV174		1		W-99
DV24		6		H-78
DV51		6		H-283
DV56		1		H-78
DV63 or DV67	or	6		H-249 / H-283
DV60		1		H-51
PCX36		1		H-78

Note: PCX15 required for leaf heights over 2285mm.

ACCESSORIES

ACDV18	2	CLEAT FOR DV14
ACDV19	2	CLEAT FOR DV14
ACDV22	12	CLEAT FOR DV23
ACDV24	2	CHEVRON FOR DV14
ACDV244	1 x (W-90) + 2 x (H-60)	FLIPPER GASKET
ACDV245	1 x (W-62) + 1 x (H-46)	SEALING GASKET
ACDV202	8 x (H-67)	SEALING GASKET
ACDV246	1 x (W-62) + 1 x (H-46)	SEALING GASKET
ACDV225 or 226	1	SHOOTBOLT HANDLE
ACDV227	1	SHOOTBOLT GEARBOX
ACDV228	1 (PAIR)	SHOOTBOLT ROD
ACDV259	1 (PAIR)	SHOOTBOLT GUIDE
ACDV230	1	SHOOTBOLT COVER
ACDV231	10	INTERMEDIATE HINGE
ACDV232	1	BOTTOM ROLLER HINGE
ACDV233	1	TOP GUIDE HINGE
ACDV274	1	D-HANDLE
ACDV718/9	1	MULTI-POINT LOCK
ACDV251	1 (PAIR)	LEVER HANDLES
ACDV56	1 (PAIR)	END CAP FOR DV56
ACDV252	1	KEEP GUIDE
ACMX01603 (SL)	1	HALF CYLINDER
ACDV171/173	2	END CAPS FOR DV171/173
ACDV258 (SL)	1	50/50 CYLINDER
ACDV264	11	SCREW FOR KEEP
ACDV265	11	SCREW FOR LOCK
ACSG023	11	FIXING BLOCK FOR KEEPS
ACET060	2	SCREW FOR ACDV252
ACDV241	11	FIXING BLOCK FOR LOCK
ACET067	11	SCREW FOR DV56
ACET069	14	SCREW FOR ACDV225/6 & DV23

ACDR052	28	SCREW FOR DV25 & DV171/3
ACDV257	2 (SET OF 4)	INFILL BLOCK
ACVG31	6 x (W/3-142) + 6 x (H-254)	EXTERNAL GLAZING GASKET
ACVG34	6 x (W/3-142) + 6 x (H-254)	INTERNAL GLAZING GASKET
ACDV249	6 x (W/3-35.5)	WOOLPILE
ACVL032	1 x (H-67)	DV56 FLIPPER GASKET
ACDV261	3 (SET OF 4)	INFILL BLOCK

IMPORTANT NOTE:
Min. Sash Width 700mm / Max. Vent Width 1000mm
Max. Sash Weight 100kg
Max. Sash Height 2400mm Dependant On Site Conditions
Always Measure In the Last Vent.

Type 2i

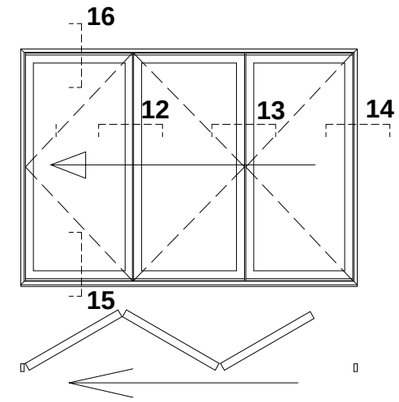

GLASS DEDUCTIONS

DV171	3 x	W/3 - 142.5	H - 254
DV173	3 x	W/3 - 142.5	H - 259

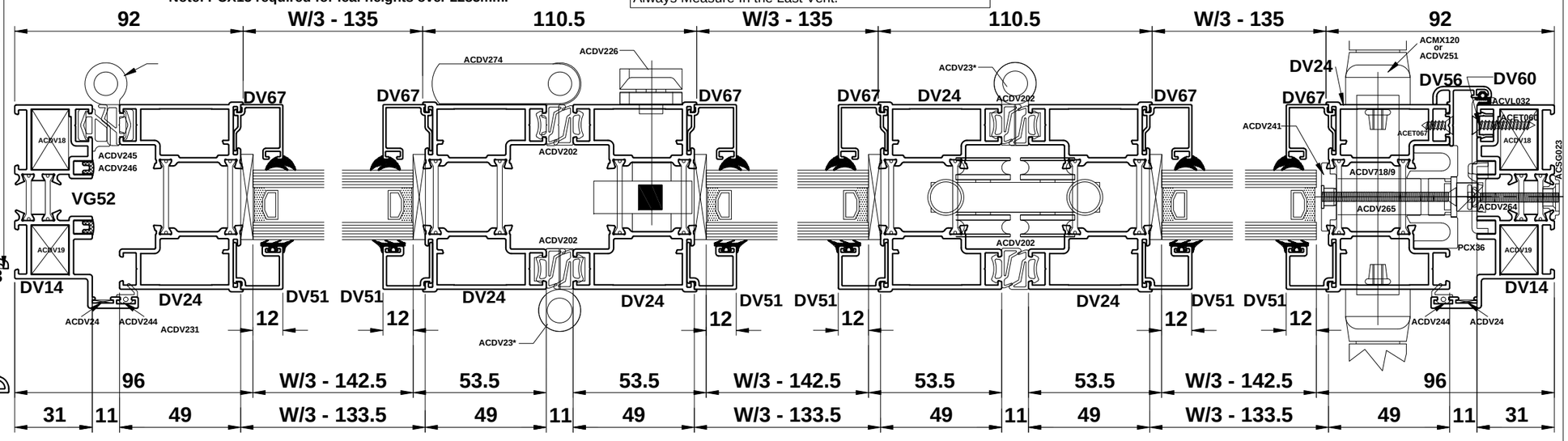

Do Not Scale From This Drawing

Type 2i With DV23 & Standard Threshold - Open In

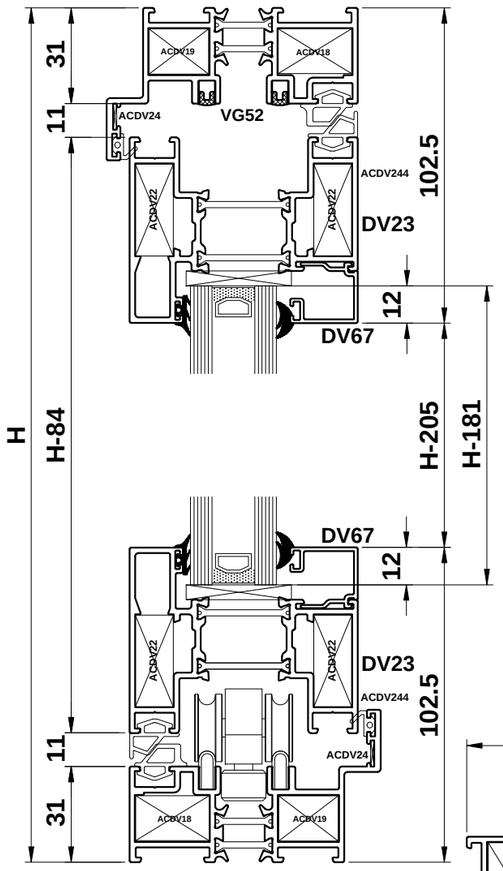

PROFILE CUTTING SCHEDULE

DV14		2		W	
DV14		2		H	
DV23		6		W/3-133.5	
DV24		6		H-84	
DV51		6		H-295.5	
DV56		1		H-84	
DV63 or DV67	or	6		W/3-135	
DV63 or DV67	or	6		H-239	H-205
DV60		1		H-62	
VG52		2		W-62	
VG52		4		H-62	
VG53		2		W-62	
PCX36		1		H-84	

Note: PCX15 required for leaf heights over 2285mm.

GLASS SIZES		
3 X	W/3 - 142.5	
	H - 181	

IMPORTANT NOTE:
Min. Sash Width 700mm / Max. Vent Width 1000mm
Max. Sash Weight 100kg
Max. Sash Height 2400mm Dependant On Site Conditions
Always Measure In the Last Vent.

ACCESSORIES

ACDV18	4	CLEAT FOR DV14
ACDV19	4	CLEAT FOR DV14
ACDV22	24	CLEAT FOR DV23
ACDV24	4	CHEVRON FOR DV14
ACDV244	2 x (W-90) + 2 x (H-90)	FLIPPER GASKET
ACDV245	2 x (W-62) + 1 x (H-62)	SEALING GASKET
ACDV202	8 x (H-84)	SEALING GASKET
ACDV246	2 x (W-62) + 1 x (H-62)	SEALING GASKET
ACDV225 or 226	1	SHOOTBOLT HANDLE
ACDV227	1	SHOOTBOLT GEARBOX
ACDV228	1 (PAIR)	SHOOTBOLT ROD
ACDV259	1 (PAIR)	SHOOTBOLT GUIDE
ACDV230	1	SHOOTBOLT COVER
ACDV231	10	INTERMEDIATE HINGE
ACDV232	1	BOTTOM ROLLER HINGE
ACDV233	1	TOP GUIDE HINGE
ACDV274	1	D-HANDLE
ACDV718/9	1	MULTI-POINT LOCK
ACDV251	1 (PAIR)	LEVER HANDLES
ACDV56	1 (PAIR)	END CAP FOR DV56
ACDV252	1	KEEP GUIDE
ACDV257	3 (SET OF 4)	INFILL BLOCK
ACMX01603 (SL)	1	HALF CYLINDER
ACDV258 (SL)	1	CYLINDER
ACET060	2	SCREW FOR ACDV252
ACDV241	11	FIXING BLOCK FOR LOCK
ACET067	11	SCREW FOR DV56
ACET069	26	SCREW FOR ACDV225/6 & DV23
ACDV264	11	SCREW FOR KEEPS
ACDV265	11	SCREW FOR LOCK

ACSG023	11	FIXING PLATE FOR KEEP
ACVG31	6 x (W/3-142) + 6 x (H-181)	EXTERNAL GLAZING GASKET
ACVG34	6 x (W/3-142) + 6 x (H-181)	INTERNAL GLAZING GASKET
ACVL032	1 x (H-67)	DV56 FLIPPER GASKET

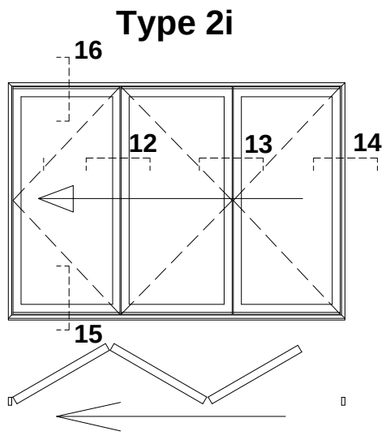

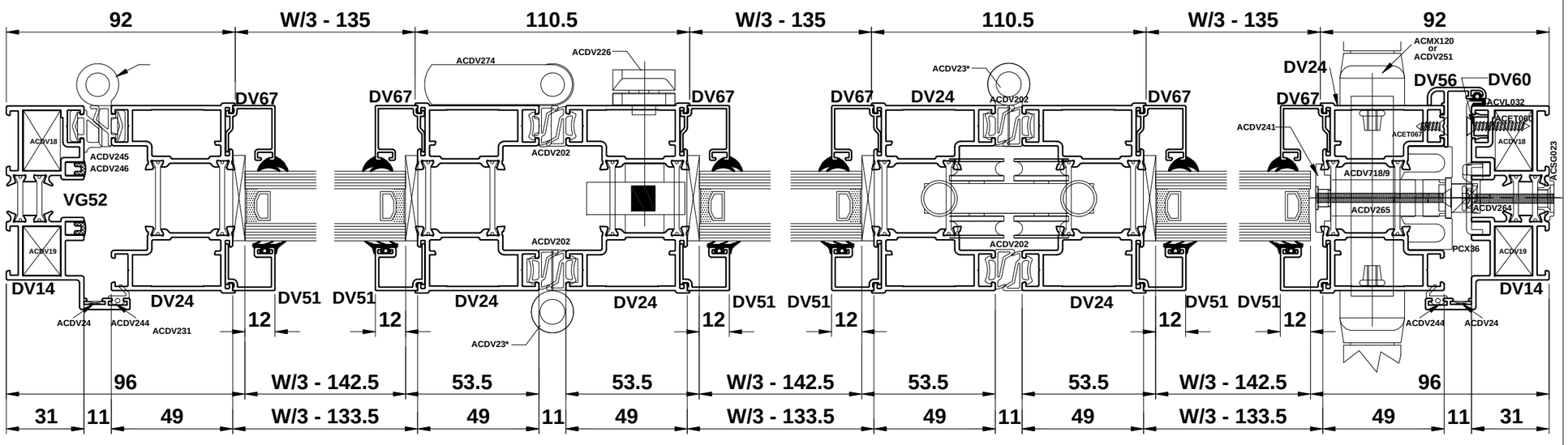

Do Not Scale From This Drawing

Visofold 2000

Type 2i With DV23 & Low Threshold - Open In

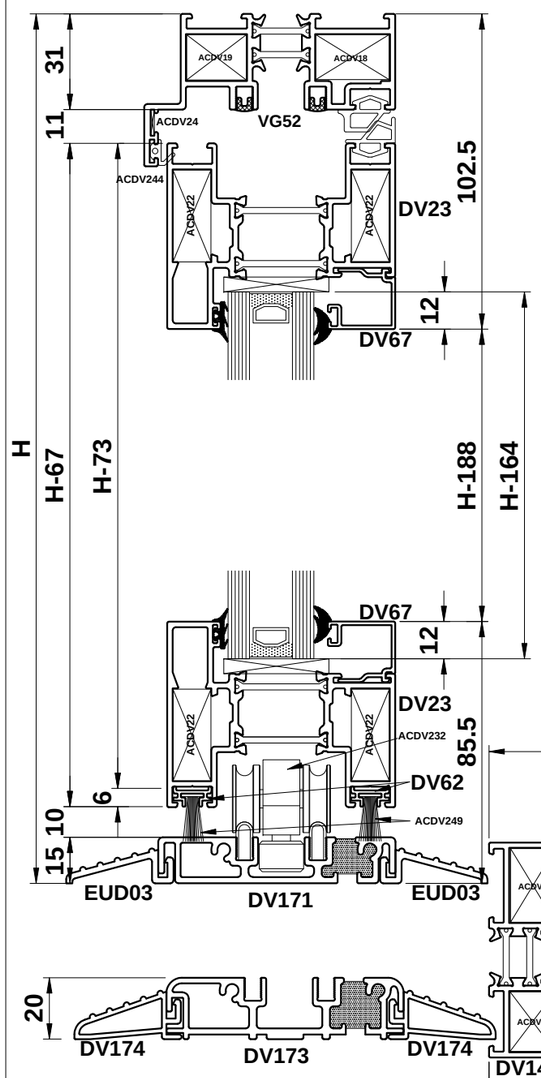

PROFILE CUTTING SCHEDULE (DV171)

DV14		1		W	
DV14		2		H	
DV171		1		W-66	
EUD03		1		W-66	
EUD03		1		W-99	
DV23		6		W/3-133.5	
DV24		6		H-73	
DV51		6		H-278	
DV56		1		H-73	
DV63 or DV67	or	6		W/3-135	
DV63 or DV67	or	6		H-244	H-278
DV60		1		H-46	
DV62		6		W/3-133.5	
VG52		2		W-62	
VG52		4		H-42	
VG53		2		W-66	
PCX36		1		H-73	

PROFILE CUTTING SCHEDULE (DV173)

DV173		1		W-66	
DV174		1		W-66	
DV174		1		W-99	
DV24		6		H-78	
DV51		6		H-188	
DV56		1		H-78	
DV63 or DV67	or	6		H-222	H-188
DV60		1		H-51	
PCX36		1		H-78	

Note: PCX15 required for leaf heights over 2285mm.

ACCESSORIES

ACDV18	2	CLEAT FOR DV14
ACDV19	2	CLEAT FOR DV14
ACDV22	24	CLEAT FOR DV23
ACDV24	2	CHEVRON FOR DV14
ACDV244	1 x (W-90) + 2 x (H-60)	FLIPPER GASKET
ACDV245	1 x (W-62) + 1 x (H-46)	SEALING GASKET
ACDV202	8 x (H-67)	SEALING GASKET
ACDV246	1 x (W-62) + 1 x (H-46)	SEALING GASKET
ACDV225 or 226	1	SHOOTBOLT HANDLE
ACDV227	1	SHOOTBOLT GEARBOX
ACDV228	1 (PAIR)	SHOOTBOLT ROD
ACDV259	1 (PAIR)	SHOOTBOLT GUIDE
ACDV230	1	SHOOTBOLT COVER
ACDV231	10	INTERMEDIATE HINGE
ACDV232	1	BOTTOM ROLLER HINGE
ACDV233	1	TOP GUIDE HINGE
ACDV274	1	D-HANDLE
ACDV718/9	1	MULTI-POINT LOCK
ACDV251	1 (PAIR)	LEVER HANDLES
ACDV56	1 (PAIR)	END CAP FOR DV56
ACDV252	1	KEEP GUIDE
ACDV257	4 (SET OF 4)	INFILL BLOCK
ACDV171/173	1 (PAIR)	END CAPS FOR DV171/173
ACMX01603 (SL)	1	HALF CYLINDER
ACDV258 (SL)	1	CYLINDER
ACET060	2	SCREW FOR ACDV252
ACDV264	11	SCREW FOR KEEPS
ACDV265	11	SCREW FOR LOCK
ACDV241	11	FIXING BLOCK FOR LOCK
ACET067	11	SCREW FOR DV56

IMPORTANT NOTE:
Min. Sash Width 700mm / Max. Vent Width 1000mm
Max. Sash Weight 100kg
Max. Sash Height 2400mm Dependant On Site Conditions
Always Measure In the Last Vent.

ACDR052	4	SCREW FOR DV25 & DV171
ACET069	26	SCREW FOR ACDV225/6 & DV23
ACVG31	6 x (W/3-142) + 6 x (H-164)	EXTERNAL GLAZING GASKET
ACVG34	6 x (W/3-142) + 6 x (H-164)	INTERNAL GLAZING GASKET
ACDV249	6 x (W/3-35.5)	WOOLPILE
ACVL032	1 x (H-67)	DV56 FLIPPER GASKET
ACDV261	3 (SET OF 4)	INFILL BLOCK
ACSG023	11	FIXING PLATE FOR KEEP

Type 2i

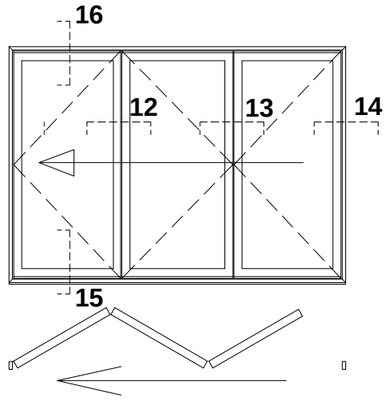

GLASS DEDUCTIONS

DV171	3 x	W/3 - 142.5	H - 164
DV173	3 x	W/3 - 142.5	H - 169

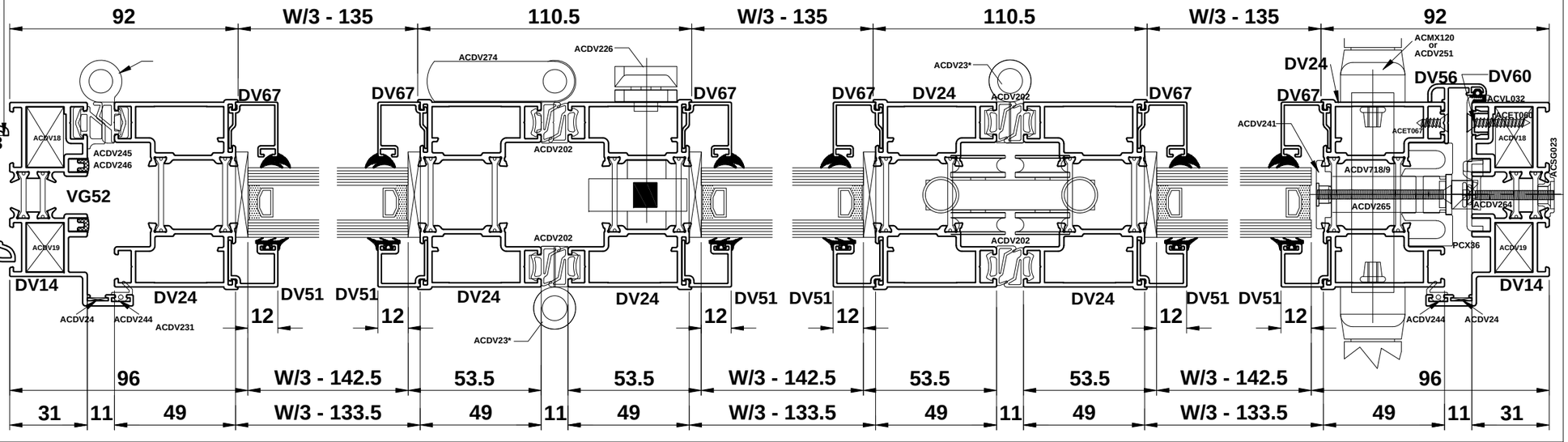

Do Not Scale From This Drawing

Visofold 2000

Type 4i With Standard Threshold - Open In

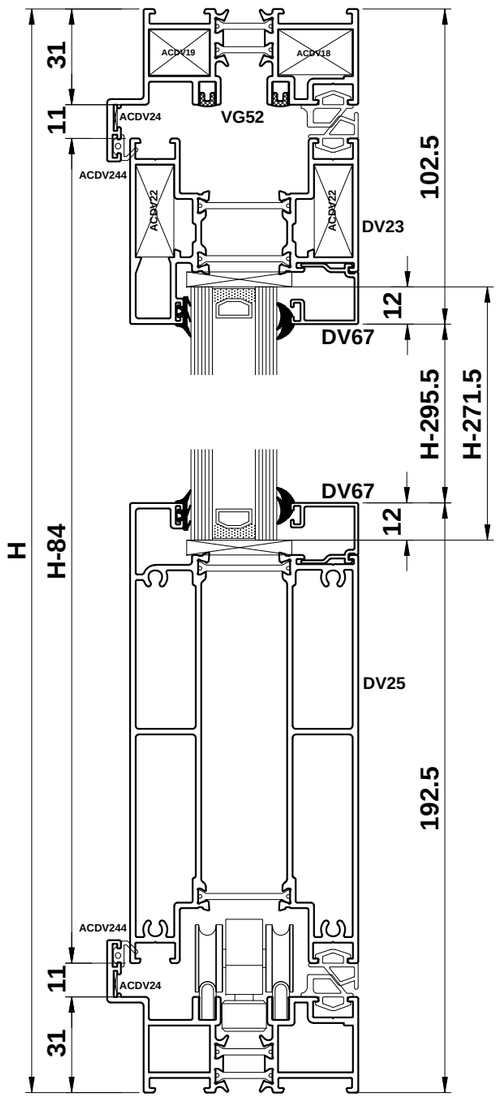

PROFILE CUTTING SCHEDULE

DV14		2		W
DV14		2		H
DV23		4		W/4-129.5
DV24		8		H-84
DV25		4		W/4-129.5
DV51		8		H-295
DV56		2		H-84
DV63 or DV67	or	8		W/4-131
DV63 or DV67	or	8		H-261 H-295
VG52		2		W-62
VG52		4		H-62
VG53		2		W-62
DV68		2		H-84
PCX15		1		H-84
PCX36		2		H-84

Note: PCX15 required for master door if leaf height is over 2285mm.

GLASS DEDUCTIONS	
4 X	W/4 - 139
	H - 271

IMPORTANT NOTE:
Min. Sash Width 700mm / Max. Vent Width 1000mm
Max. Sash Weight 100kg
Max. Sash Height 2400mm Dependant On Site Conditions
Always Measure In the Last Vent.

ACCESSORIES

ACDV18	4	CLEAT FOR DV14
ACDV19	4	CLEAT FOR DV14
ACDV22	16	CLEAT FOR DV23
ACDV24	4	CHEVRON FOR DV14
ACDV244	2 x (W-90) + 2 x (H-90)	FLIPPER GASKET
ACDV245	2 x (W-62) + 2 x (H-62)	SEALING GASKET
ACDV202	8 x (H-84)	SEALING GASKET
ACDV246	2 x (W-62) + 2 x (H-62)	SEALING GASKET
ACDV225 or 226	2	SHOOTBOLT HANDLE
ACDV227	2	SHOOTBOLT GEARBOX
ACDV228	2 (PAIRS)	SHOOTBOLT ROD
ACDV259	2 (PAIRS)	SHOOTBOLT GUIDE
ACDV230	1	SHOOTBOLT COVER
ACDV231	14	INTERMEDIATE HINGE
ACDV232	1	BOTTOM ROLLER HINGE
ACDV233	1	TOP GUIDE HINGE
ACDV274	1	D-HANDLE
ACDV220	1	PACKER FOR LOCK
ACDV718/9	1	MULTI-POINT LOCK
ACDV251	1 (PAIR)	LEVER HANDLES
ACDV56	2 (PAIRS)	END CAP FOR DV56
ACDV257	4 (SET OF 4)	INFILL BLOCK
ACMX01603 (SL)	2	HALF CYLINDER
ACDV258 (SL)	1	50/50 CYLINDER
ACET131	2	DRAIN HOLE COVER
ACET060	24	SCREW FOR ACDV253 & DV56
ACDV241	22	FIXING BLOCK FOR LOCK & KEEPS
ACDV265	22	FIXING SCREW FOR LOCK & KEEPS
ACET069	20	SCREW FOR ACDV225/6 & DV23
ACDR052	32	SCREW FOR DV25
ACVG31	8 x (W/4-137) + 8 x (H-271)	EXTERNAL GLAZING GASKET
ACVG34	6 x (W/4-137) + 6 x (H-271)	INTERNAL GLAZING GASKET

Type 4i

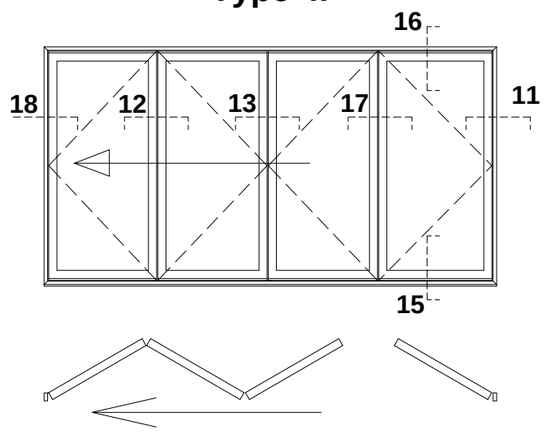

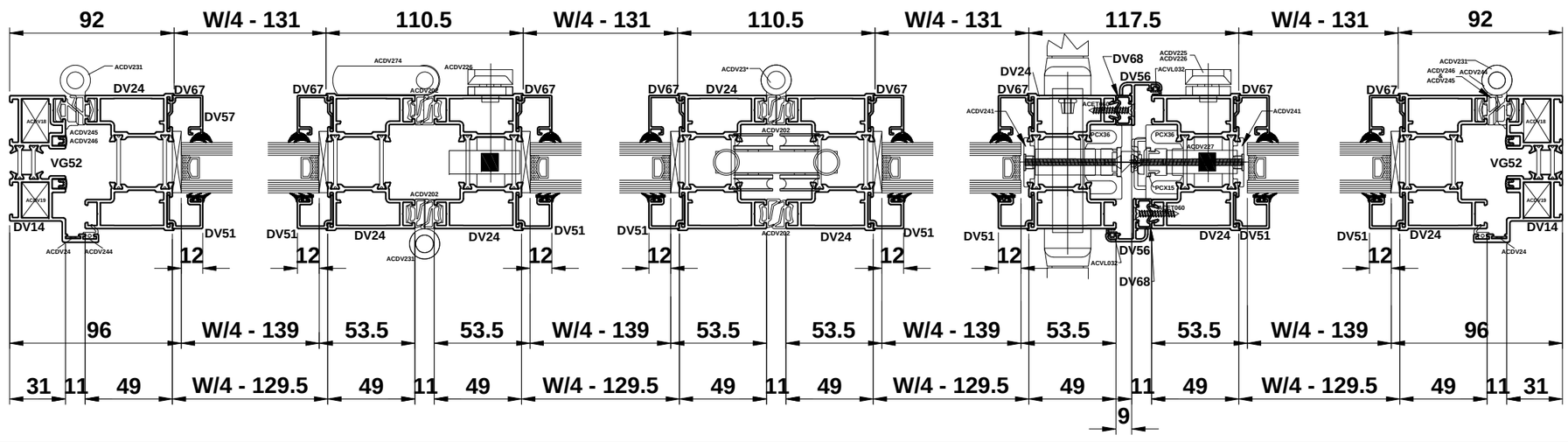

Do Not Scale From This Drawing

Visofold 2000

Type 4i With Low Threshold - Open In

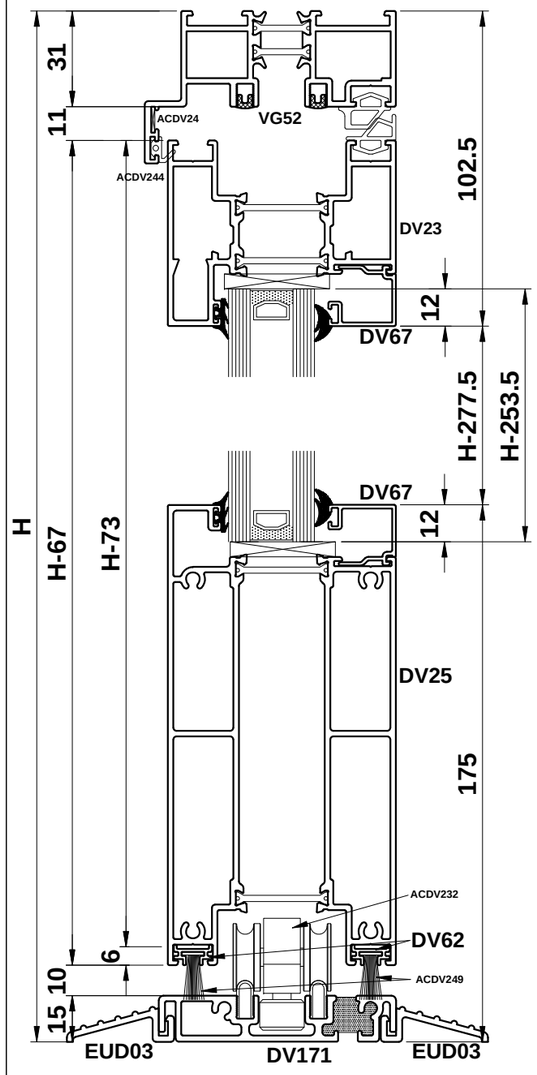

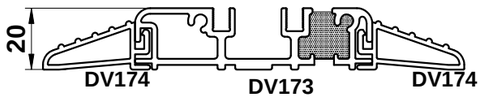

PROFILE CUTTING SCHEDULE (DV171)

DV14		1		W	
DV14		2		H	
DV171		1		W-66	
EUD03		1		W-66	
EUD03		1		W-99	
DV23		4		W/4-129.5	
DV24		8		H-73	
DV25		4		W/4-129.5	
DV51		8		H-278	
DV56		2		H-73	
DV63 or DV67	or	8		W/4-131	
DV63 or DV67	or	8		H-244	H-278
DV62		8		W/4-129.5	
VG52		2		W-62	
VG52		4		H-42	
VG53		2		W-66	
DV68		2		H-73	
PCX15		1		H-73	
PCX36		2		H-73	

PROFILE CUTTING SCHEDULE (DV173)

DV173		1		W-66	
DV174		1		W-66	
DV174		1		W-99	
DV24		8		H-78	
DV51		8		H-283	
DV56		1		H-78	
DV63 or DV67	or	8		H-249	H-283
DV60		1		H-51	
PCX36		2		H-78	
DV68		2		H-78	
PCX15		1		H-78	

ACCESSORIES

ACDV18	2	CLEAT FOR DV14
ACDV19	2	CLEAT FOR DV14
ACDV22	16	CLEAT FOR DV23
ACDV24	2	CHEVRON FOR DV14
ACDV244	1 x (W-90) + 2 x (H-60)	FLIPPER GASKET
ACDV245	1 x (W-62) + 2 x (H-46)	SEALING GASKET
ACDV202	8 x (H-67)	SEALING GASKET
ACDV246	1 x (W-62) + 2 x (H-46)	SEALING GASKET
ACDV225 or 226	2	SHOOTBOLT HANDLE
ACDV227	2	SHOOTBOLT GEARBOX
ACDV228	2 (PAIRS)	SHOOTBOLT ROD
ACDV259	2 (PAIRS)	SHOOTBOLT GUIDE
ACDV230	1	SHOOTBOLT COVER
ACDV231	14	INTERMEDIATE HINGE
ACDV232	1	BOTTOM ROLLER HINGE
ACDV233	1	TOP GUIDE HINGE
ACDV274	1	D-HANDLE
ACDV718/9	1	MULTI-POINT LOCK
ACDV251	1 (PAIR)	LEVER HANDLES
ACDV56	1 (PAIR)	END CAP FOR DV56
ACDV252	1	KEEP GUIDE
ACDV253	1	KEEP GUIDE PACKER
ACDV257	2 (SET OF 4)	INFILL BLOCK
ACDV171	1 (PAIR)	END CAPS FOR DV171/3
ACMX01603 (SL)	2	HALF CYLINDER
ACDV258 (SL)	1	50/50 CYLINDER
ACET060	24	SCREW FOR ACDV253 & DV56
ACET069	20	SCREW FOR ACDV225/6 & DV23
ACDV241	22	FIXING BLOCK FOR LOCK & KEEPS
ACDV265	22	FIXING SCREW FOR LOCK & KEEPS
ACDR052	36	SCREW FOR DV25 & DV171/3
ACVG31	8 x (W/4-137) + 8 x (H-254)	EXTERNAL GLAZING GASKET
ACVG34	8 x (W/4-137) + 8 x (H-254)	INTERNAL GLAZING GASKET
ACDV249	8 x (W/3-35.5)	WOOLPILE
ACVL032	2 x (H-67)	DV56 FLIPPER GASKET
ACDV261	3 (SET OF 4)	INFILL BLOCK

Type 4i

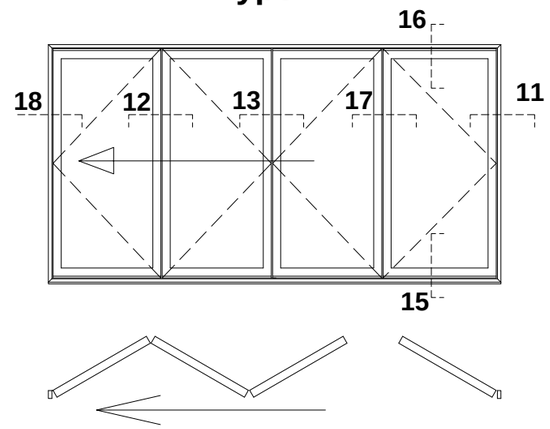

GLASS DEDUCTIONS

DV171	4 x	W/4 - 139	H - 253.5
DV173	4 x	W/4 - 139	H - 258.5

IMPORTANT NOTE:
Min. Sash Width 700mm / Max. Vent Width 1000mm
Max. Sash Weight 100kg
Max. Sash Height 2400mm Dependant On Site Conditions
Always Measure In the Last Vent.

Note: PCX15 required for master door if leaf height is over 2285mm.

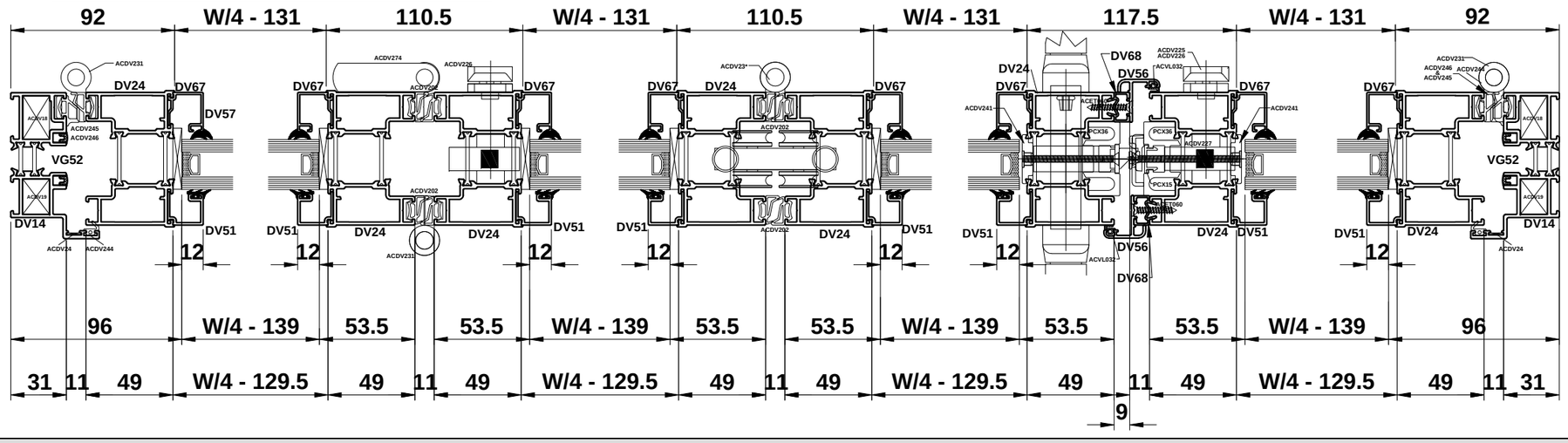

Do Not Scale From This Drawing

Type 4i With DV23 & Standard Threshold - Open In

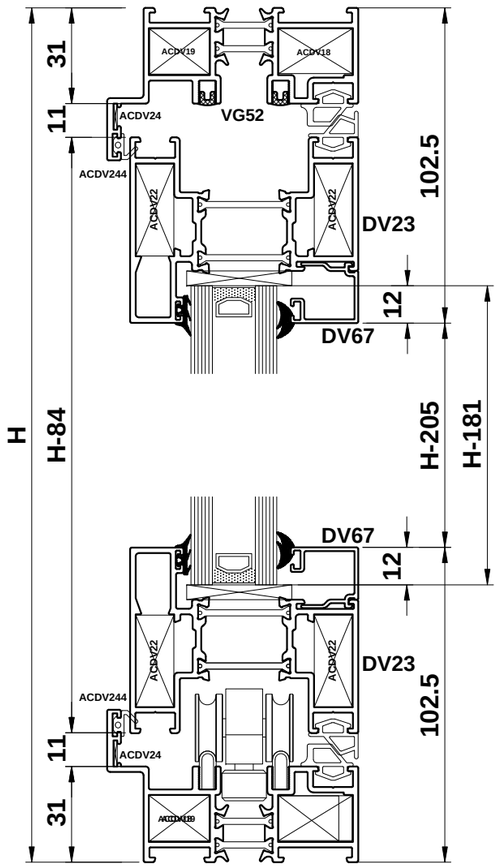

PROFILE CUTTING SCHEDULE

DV14		2		W	
DV14		2		H	
DV23		8		W/4-129.5	
DV24		8		H-84	
DV51		8		H-295.5	
DV56		2		H-84	
DV63 or DV67	or	8		W/4-131	
DV63 or DV67	or	8		H-261.5	H-295.5
VG52		2		W-62	
VG52		4		H-62	
VG53		2		W-62	
DV68		2		H-84	
PCX15		1		H-84	
PCX36		2		H-84	

Note: PCX15 required for master door if leaf height is over 2285mm.

GLASS DEDUCTIONS	
4 X	W/4 - 139
	H - 271.5

IMPORTANT NOTE:
Min. Sash Width 700mm / Max. Vent Width 1000mm
Max. Sash Weight 100kg
Max. Sash Height 2400mm Dependant On Site Conditions
Always Measure In the Last Vent.

ACCESSORIES

ACDV18	4	CLEAT FOR DV14
ACDV19	4	CLEAT FOR DV14
ACDV22	32	CLEAT FOR DV23
ACDV24	4	CHEVRON FOR DV14
ACDV244	2 x (W-90) + 2 x (H-90)	FLIPPER GASKET
ACDV245	2 x (W-62) + 2 x (H-62)	SEALING GASKET
ACDV202	8 x (H-84)	SEALING GASKET
ACDV246	2 x (W-62) + 2 x (H-62)	SEALING GASKET
ACDV225 or 226	2	SHOOTBOLT HANDLE
ACDV227	2	SHOOTBOLT GEARBOX
ACDV228	2 (PAIRS)	SHOOTBOLT ROD
ACDV259	2 (PAIRS)	SHOOTBOLT GUIDE
ACDV230	1	SHOOTBOLT COVER
ACDV231	14	INTERMEDIATE HINGE
ACDV232	1	BOTTOM ROLLER HINGE
ACDV233	1	TOP GUIDE HINGE
ACDV234	1	D-HANDLE
ACDV718/9	1	MULTI-POINT LOCK
ACDV251	1 (PAIR)	LEVER HANDLES
ACDV56	2 (PAIRS)	END CAP FOR DV56
ACDV253	1	KEEP GUIDE PACKER
ACDV257	4 (SET OF 4)	INFILL BLOCK
ACMX01603 (SL)	2	HALF CYLINDER
ACDV258 (SL)	1	50/50 CYLINDER
ACET131	2	DRAIN HOLE COVER
ACET060	24	SCREW FOR ACDV253 & DV56
ACDV241	22	FIXING BLOCK FOR LOCK & KEEPS
ACDV265	22	FIXING SCREW FOR LOCK & KEEPS
ACET069	36	SCREW FOR ACDV225/6 & DV23
ACVG31	8 x (W/4-137) + 8 x (H-271)	EXTERNAL GLAZING GASKET
ACVG34	6 x (W/4-137) + 6 x (H-271)	INTERNAL GLAZING GASKET

Type 4i

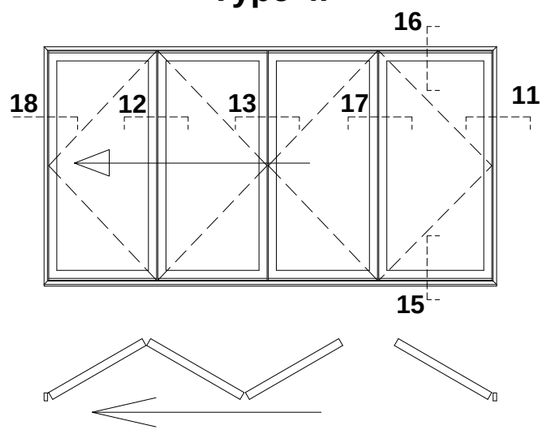

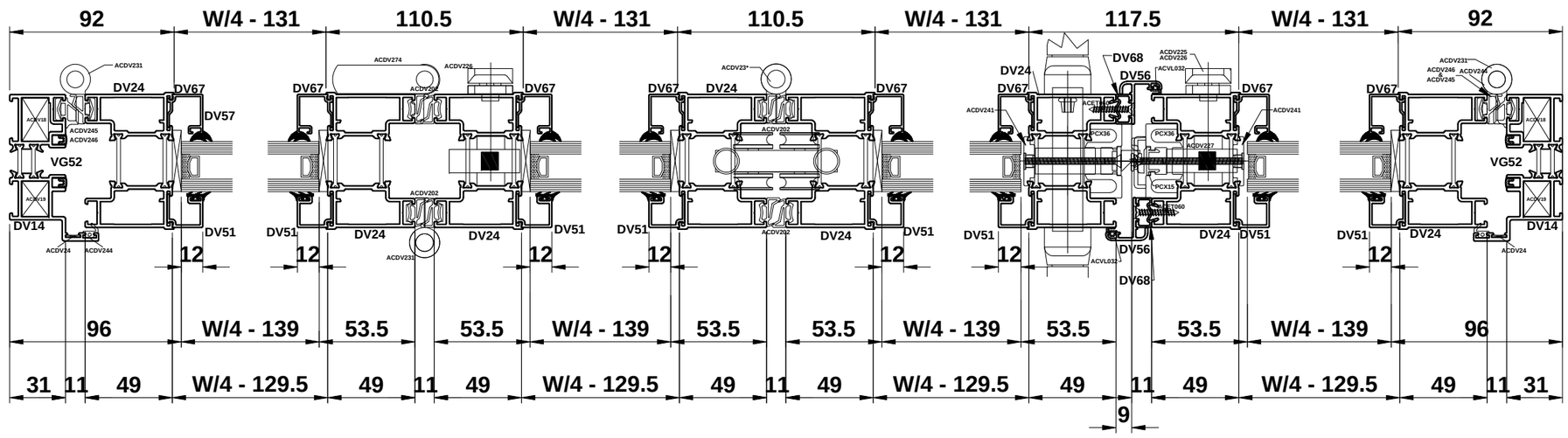

Do Not Scale From This Drawing

Visofold 2000

Type 4i With DV23 & Low Threshold - Open In

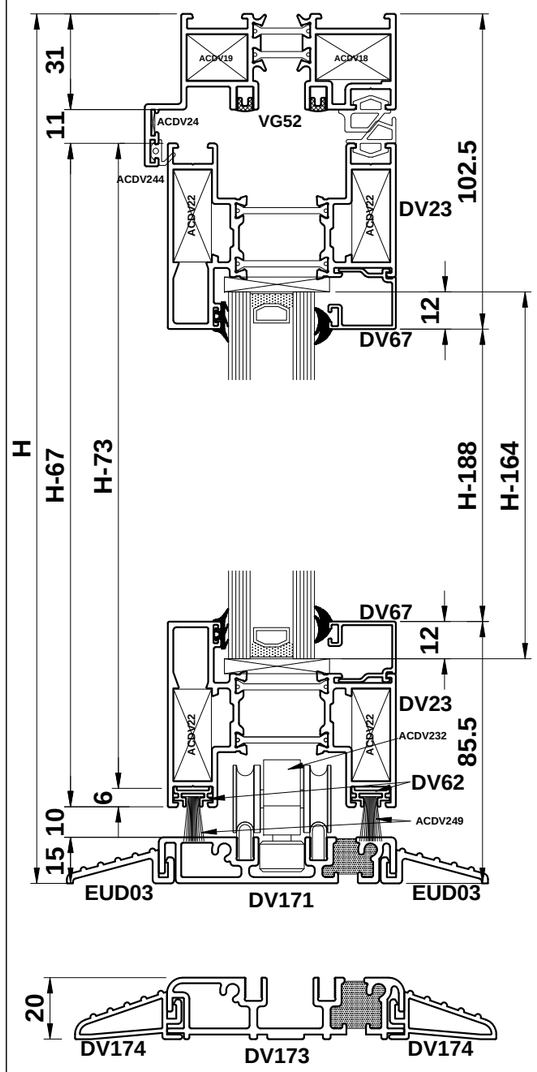

PROFILE CUTTING SCHEDULE (DV171)

DV14		1		W	
DV14		2		H	
DV171		1		W-66	
EUD03		1		W-66	
EUD03		1		W-99	
DV23		8		W/4-129.5	
DV24		8		H-73	
DV51		8		H-278	
DV56		2		H-73	
DV63 or DV67	or	8		W/4-131	
DV63 or DV67	or	8		H-244	H-278
DV62		8		W/4-128	
VG52		2		W-62	
VG52		4		H-42	
VG53		2		W-66	
DV68		2		H-73	
PCX15		1		H-73	
PCX36		2		H-73	

PROFILE CUTTING SCHEDULE (DV173)

DV173		1		W-66	
DV174		1		W-66	
DV174		1		W-99	
DV24		8		H-78	
DV51		8		H-283	
DV56		1		H-78	
DV63 or DV67	or	8		H-249	H-283
DV60		1		H-51	
PCX36		2		H-78	
DV68		2		H-78	
PCX15		1		H-78	

Note: PCX15 required for master door if leaf height is over 2285mm.

ACCESSORIES

ACDV18	2	CLEAT FOR DV14
ACDV19	2	CLEAT FOR DV14
ACDV22	32	CLEAT FOR DV23
ACDV24	2	CHEVRON FOR DV14
ACDV244	1 x (W-90) + 2 x (H-60)	FLIPPER GASKET
ACDV245	1 x (W-62) + 2 x (H-46)	SEALING GASKET
ACDV202	8 x (H-67)	SEALING GASKET
ACDV246	1 x (W-62) + 2 x (H-46)	SEALING GASKET
ACDV225 or 226	2	SHOOTBOLT HANDLE
ACDV227	2	SHOOTBOLT GEARBOX
ACDV228	2 (PAIRS)	SHOOTBOLT ROD
ACDV259	2 (PAIRS)	SHOOTBOLT GUIDE
ACDV230	1	SHOOTBOLT COVER
ACDV231	14	INTERMEDIATE HINGE
ACDV232	1	BOTTOM ROLLER HINGE
ACDV233	1	TOP GUIDE HINGE
ACDV274	1	D-HANDLE
ACDV718/9	1	MULTI-POINT LOCK
ACDV251	1 (PAIR)	LEVER HANDLES
ACDV56	1 (PAIR)	END CAP FOR DV56
ACDV252	1	KEEP GUIDE
ACDV253	1	KEEP GUIDE PACKER
ACDV257	2 (SET OF 4)	INFILL BLOCK
ACDV171	1 (PAIR)	END CAPS FOR DV171/3
ACMX01603 (SL)	2	HALF CYLINDER
ACDV258 (SL)	1	50/50 CYLINDER
ACET060	24	SCREW FOR ACDV253 & DV56
ACET069	20	SCREW FOR ACDV225/6 & DV23
ACDV241	22	FIXING BLOCK FOR LOCK & KEEPS
ACDV265	22	FIXING SCREW FOR LOCK & KEEPS
ACDR052	4	SCREW FOR DV25 & DV171/3
ACVG31	8 x (W/4-137) + 8 x (H-254)	EXTERNAL GLAZING GASKET
ACVG34	8 x (W/4-137) + 8 x (H-254)	INTERNAL GLAZING GASKET
ACDV249	8 x (W/3-35.5)	WOOLPILE
ACVL032	2 x (H-67)	DV56 FLIPPER GASKET
ACDV261	3 (SET OF 4)	INFILL BLOCK

Type 4i

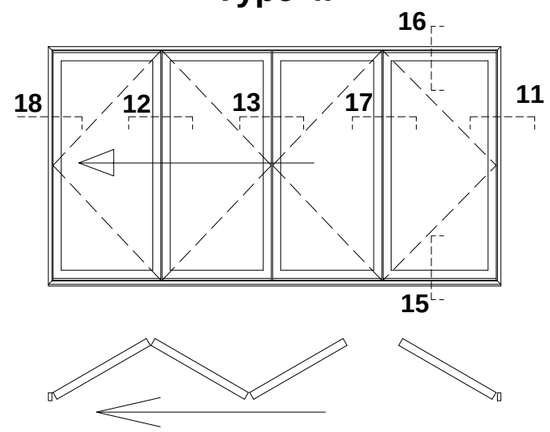

GLASS DEDUCTIONS

DV171	4 x	W/4 - 139	H - 164
DV173	4 x	W/4 - 139	H - 169

IMPORTANT NOTE:
Min. Sash Width 700mm / Max. Vent Width 1000mm
Max. Sash Weight 100kg
Max. Sash Height 2400mm Dependant On Site Conditions
Always Measure In the Last Vent.

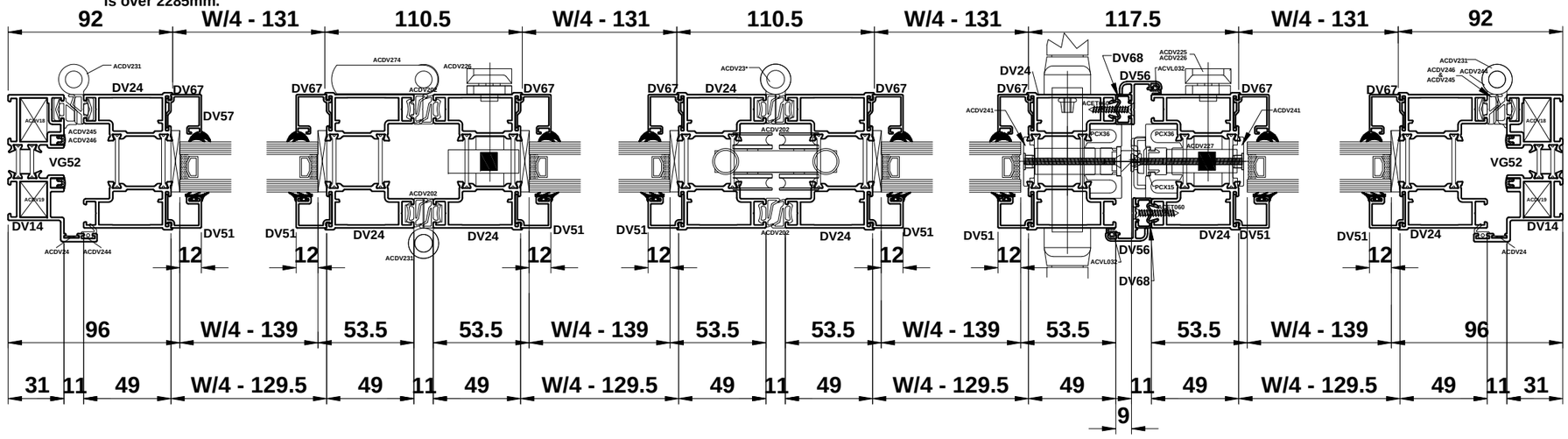

Do Not Scale From This Drawing

Type 6i With Standard Threshold - Open In

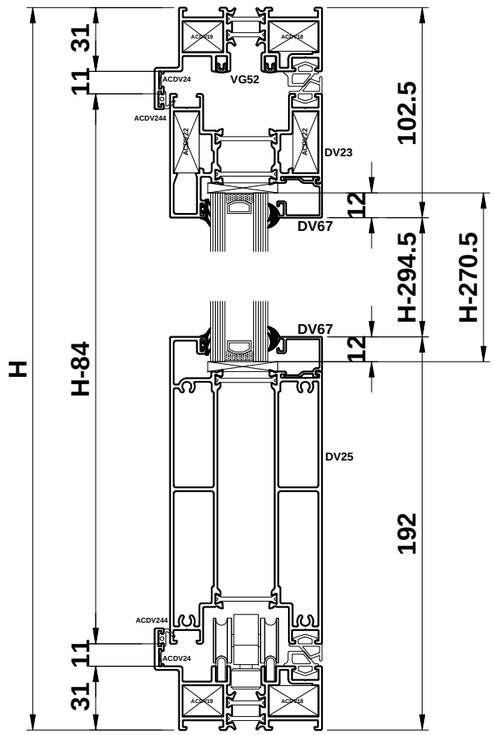

PROFILE CUTTING SCHEDULE

DV14		2		W	
DV14		2		H	
DV23		5		W/5-123.5	
DV24		10		H-84	
DV25		5		W/5-123.5	
DV51		10		H-294.5	
DV56		1		H-84	
DV63 or DV67	or	10		W/5-125	
DV63 or DV67	or	10		H-260.5	H-294.5
DV60		1		H-62	
VG52		2		W-62	
VG52		4		H-62	
VG53		2		W-62	
PCX36		1		H-84	

Note: PCX15 required for leaf heights over 2285mm.

GLASS DEDUCTIONS	
5 X	W/5 - 133
	H - 270.5

IMPORTANT NOTE:
Min. Sash Width 700mm / Max. Vent Width 1000mm
Max. Sash Weight 100kg
Max. Sash Height 2400mm Dependant On Site Conditions
Always Measure In the Last Vent.

ACCESSORIES

ACDV18	4	CLEAT FOR DV14
ACDV19	4	CLEAT FOR DV14
ACDV22	20	CLEAT FOR DV23
ACDV24	4	CHEVRON FOR DV14
ACDV244	2 x (W-90) + 2 x (H-90)	FLIPPER GASKET
ACDV245	2 x (W-62) + 2 x (H-62)	SEALING GASKET
ACDV202	18 x (H-84)	SEALING GASKET
ACDV246	2 x (W-62) + 2 x (H-62)	SEALING GASKET
ACDV225 or 226	2	SHOOTBOLT HANDLE
ACDV227	2	SHOOTBOLT GEARBOX
ACDV228	2 (PAIR)	SHOOTBOLT ROD
ACDV259	2 (PAIR)	SHOOTBOLT GUIDE
ACDV230	2	SHOOTBOLT COVER
ACDV231	16	INTERMEDIATE HINGE
ACDV232	2	BOTTOM ROLLER HINGE
ACDV233	2	TOP GUIDE HINGE
ACDV274	2	D-HANDLE
ACDV718/9	1	MULTI-POINT LOCK
ACDV251	1 (PAIR)	LEVER HANDLES
ACDV56	1 (PAIR)	END CAP FOR DV56
ACDV252	1	KEEP GUIDE
ACDV257	5 (SET OF 4)	INFILL BLOCK
ACVL032	1 x (H-84)	DV56 FLIPPER GASKET
ACMX01603 (SL)	2	HALF CYLINDER
ACDV258 (SL)	1	50/50 CYLINDER
ACET131	2	DRAIN HOLE COVER
ACET060	2	SCREW FOR ACDV252
ACDV241	11	FIXING BLOCK FOR LOCK
ACDV265	11	FIXING SCREW FOR LOCK
ACET067	11	SCREW FOR DV56
ACET069	24	SCREW FOR ACDV225/6 & DV23
ACDR052	40	SCREW FOR DV25
ACVG31	10 x (W/5-133) + 10 x (H-271)	EXTERNAL GLAZING GASKET
ACVG34	10 x (W/5-133) + 10 x (H-271)	INTERNAL GLAZING GASKET
ACSG023	11	FIXING PLATE FOR KEEPS
ACDV264	11	SCREW FOR KEEPS

Type 6i

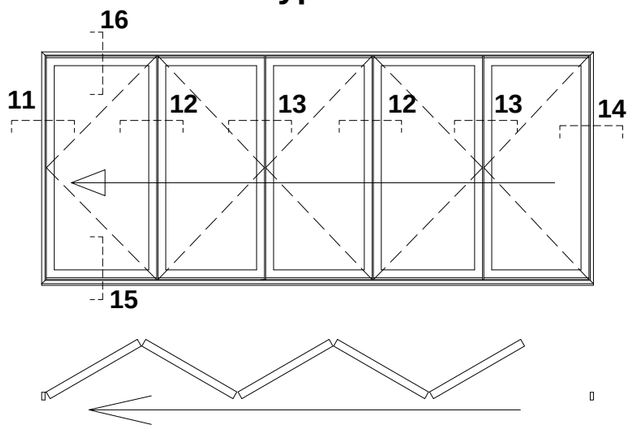

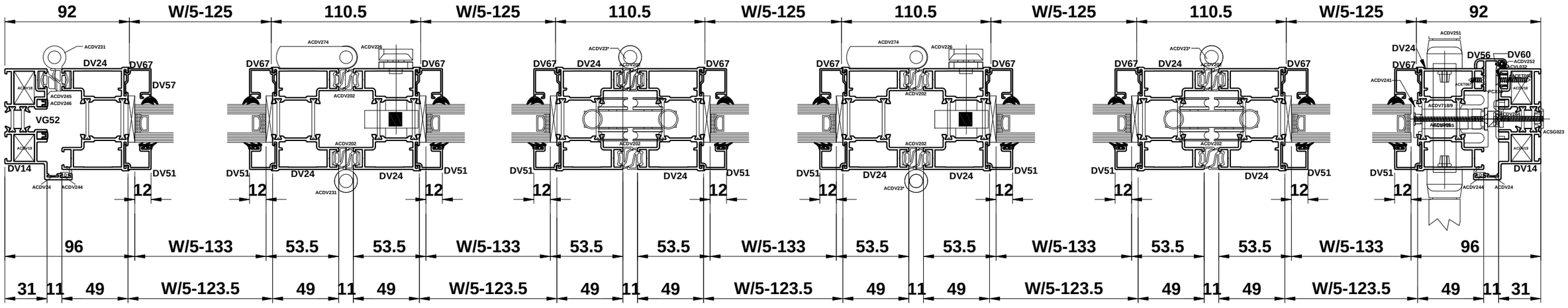

Do Not Scale From This Drawing

Type 6i With Low Threshold - Open In

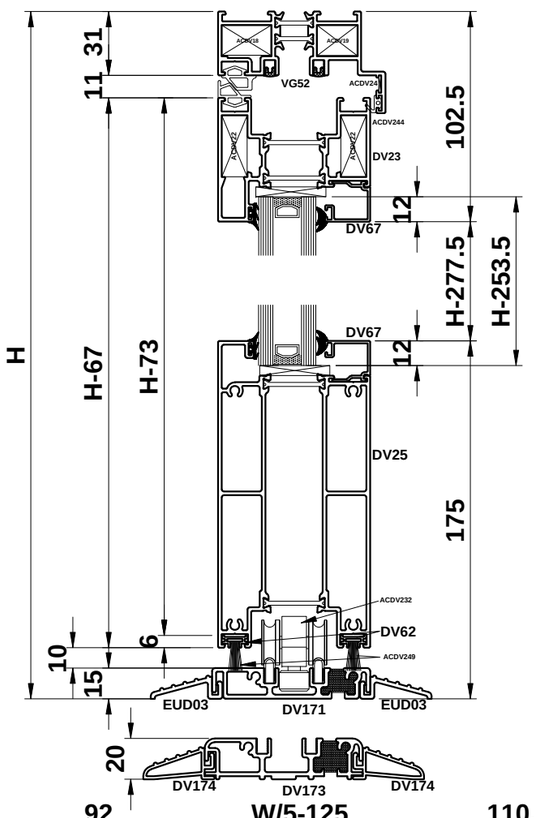

PROFILE CUTTING SCHEDULE (DV171)

DV14		1		W	
DV14		2		H	
DV171		1		W-66	
EUD03		1		W-66	
EUD03		1		W-99	
DV23		5		W/5-123.5	
DV24		10		H-73	
DV25		5		W/5-123.5	
DV51		10		H-277.5	
DV56		1		H-73	
DV63 or DV67	or	10		W/3-125	
DV63 or DV67	or	10		H-244	H-278
DV60		1		H-46	
DV62		10		W/5-123.5	
VG52		2		W-62	
VG52		4		H-42	
VG53		2		W-66	
PCX36		1		H-73	

PROFILE CUTTING SCHEDULE (DV173)

DV173		1		W-66	
DV174		1		W-66	
DV174		1		W-99	
DV24		10		H-78	
DV51		10		H-283	
DV56		1		H-78	
DV63 or DV67	or	10		H-249	H-283
DV60		1		H-51	
PCX36		2		H-78	

Note: PCX15 required for leaf heights over 2285mm.

ACCESSORIES

ACDV18	2	CLEAT FOR DV14
ACDV19	2	CLEAT FOR DV14
ACDV22	20	CLEAT FOR DV23
ACDV24	2	CHEVRON FOR DV14
ACDV244	1 x (W-90) + 2 x (H-60)	FLIPPER GASKET
ACDV245	1 x (W-62) + 1 x (H-42)	SEALING GASKET
ACDV202	18 x (H-67)	SEALING GASKET
ACDV246	1 x (W-62) + 1 x (H-42)	SEALING GASKET
ACDV226	2	SHOOTBOLT HANDLE
ACDV227	2	SHOOTBOLT GEARBOX
ACDV228	2 (PAIRS)	SHOOTBOLT ROD
ACDV259	2 (PAIRS)	SHOOTBOLT GUIDE
ACDV230	2	SHOOTBOLT COVER
ACDV231	16	INTERMEDIATE HINGE
ACDV232	2	BOTTOM ROLLER HINGE
ACDV233	2	TOP GUIDE HINGE
ACDV274	2	D-HANDLE
ACDV718/9	1	MULTI-POINT LOCK
ACDV251	1 (PAIR)	LEVER HANDLES
ACDV56	1 (PAIR)	END CAP FOR DV56
ACDV252	1	KEEP GUIDE
ACDV257	3 (SET OF 4)	INFILL BLOCK
ACDV171/173	1 (PAIR)	END CAPS FOR DV171/173
ACVL032	1 (H-67)	DV56 FLIPPER GASKET
ACMX01603 (S/L)	2	HALF CYLINDER
ACDV258 (SL)	1	50/50 CYLINDER
ACET060	2	SCREW FOR ACDV252
ACDV241	11	FIXING BLOCK FOR LOCK
ACDV265	11	FIXING SCREW FOR LOCK
ACET069	24	SCREW FOR ACDV225/6
ACDR052	36	SCREW FOR DV25 & DV171/3
ACVG31	10 x (W/5-133) + 10 x (H-254)	EXTERNAL GLAZING GASKET
ACVG34	10 x (W/5-133) + 10 x (H-254)	INTERNAL GLAZING GASKET
ACDV249	10 x (W/5-35.5)	WOOLPILE
ACDV261	3 (SET OF 4)	INFILL BLOCK
ACSG023	11	FIXING PLATE FOR KEEP
ACDV264	11	SCREW FOR KEEP
ACET067	11	SCREW FOR DV56

Type 6i

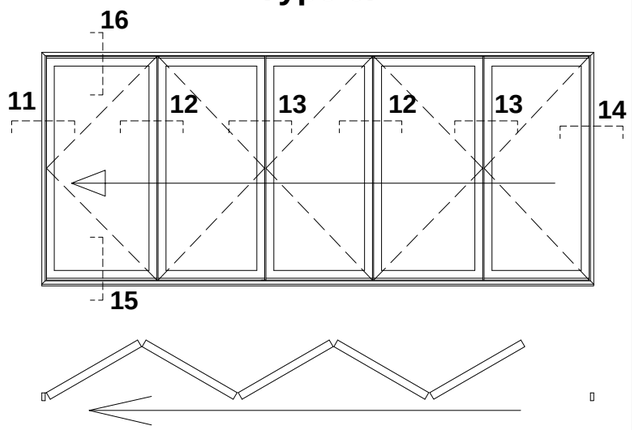

GLASS DEDUCTIONS

DV171	5 x	W/5 - 133	H - 253.5
DV173	5 x	W/5 - 133	H - 258.5

IMPORTANT NOTE:
Min. Sash Width 700mm / Max. Vent Width 1000mm
Max. Sash Weight 100kg
Max. Sash Height 2400mm Dependant On Site Conditions
Always Measure In the Last Vent.

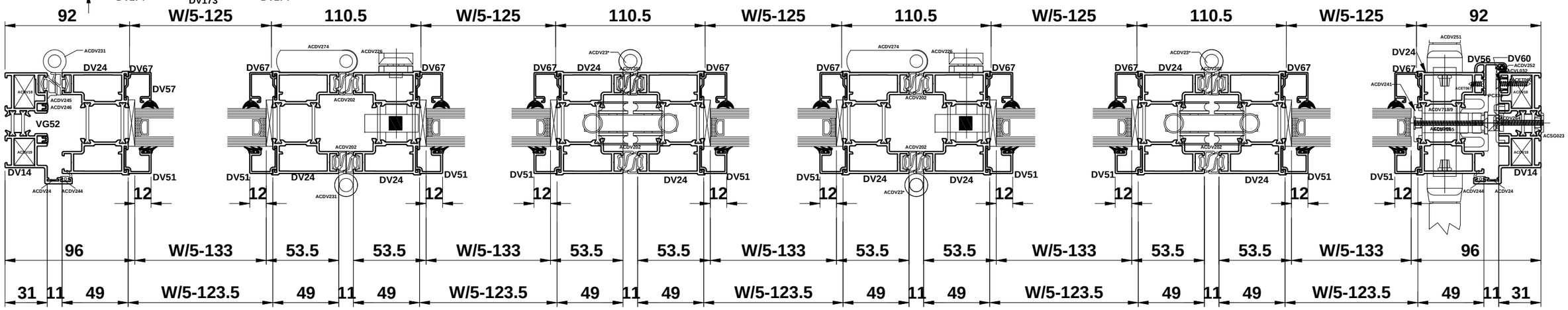

Do Not Scale From This Drawing

Type 6i With DV23 & Standard Threshold - Open In

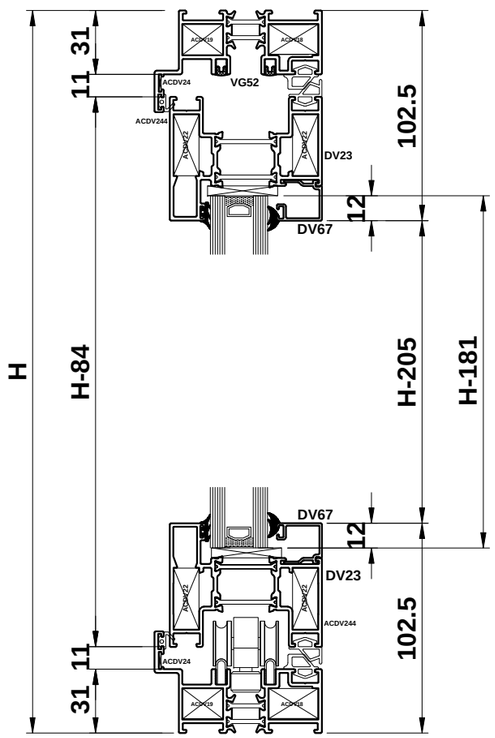

PROFILE CUTTING SCHEDULE

DV14		2		W	
DV14		2		H	
DV23		10		W/5-123.5	
DV24		10		H-84	
DV51		10		H-205	
DV56		1		H-84	
DV63 or DV67	or	10		W/5-125	
DV63 or DV67	or	10		H-239	H-205
DV60		1		H-62	
VG52		2		W-62	
VG52		4		H-62	
VG53		2		W-62	
PCX36		1		H-84	

Note: PCX15 required for leaf heights over 2285mm.

GLASS DEDUCTIONS	
5 X	W/5 - 133
	H - 229

IMPORTANT NOTE:
Min. Sash Width 700mm / Max. Vent Width 1000mm
Max. Sash Weight 100kg
Max. Sash Height 2400mm Dependant On Site Conditions
Always Measure In the Last Vent.

ACCESSORIES

ACDV18	4	CLEAT FOR DV14
ACDV19	4	CLEAT FOR DV14
ACDV22	40	CLEAT FOR DV23
ACDV24	4	CHEVRON FOR DV14
ACDV244	2 x (W-90) + 2 x (H-90)	FLIPPER GASKET
ACDV245	2 x (W-62) + 1 x (H-62)	SEALING GASKET
ACDV202	18 x (H-84)	SEALING GASKET
ACDV246	2 x (W-62) + 1 x (H-62)	SEALING GASKET
ACDV225 or 226	2	SHOOTBOLT HANDLE
ACDV227	2	SHOOTBOLT GEARBOX
ACDV228	2 (PAIR)	SHOOTBOLT ROD
ACDV259	2 (PAIR)	SHOOTBOLT GUIDE
ACDV230	2	SHOOTBOLT COVER
ACDV231	16	INTERMEDIATE HINGE
ACDV232	2	BOTTOM ROLLER HINGE
ACDV233	2	TOP GUIDE HINGE
ACDV274	2	D-HANDLE
ACDV718/9	1	MULTI-POINT LOCK
ACDV251	1 (PAIR)	LEVER HANDLES
ACDV56	1 (PAIR)	END CAP FOR DV56
ACDV252	1	KEEP GUIDE
ACDV257	5 (SET OF 4)	INFILL BLOCK
ACVL032	1 x (H-84)	DV56 FLIPPER GASKET
ACMX01603 (SL)	2	HALF CYLINDER
ACDVV258 (SL)	1	50/50 CYLINDER
ACET131	2	DRAIN HOLE COVER
ACET060	2	SCREW FOR ACDV252
ACDV241	11	FIXING BLOCK FOR LOCK
ACDV265	11	FIXING SCREW FOR LOCK
ACET067	11	SCREW FOR DV56
ACET069	4	SCREW FOR ACDV225/6
ACVG31	10 x (W/5-133) + 10 x (H-229)	EXTERNAL GLAZING GASKET
ACVG34	10 x (W/5-133) + 10 x (H-229)	INTERNAL GLAZING GASKET
ACSG023	11	FIXING PLATE FOR KEEP
ACSG071	11	SCREW FOR KEEP

Type 6i

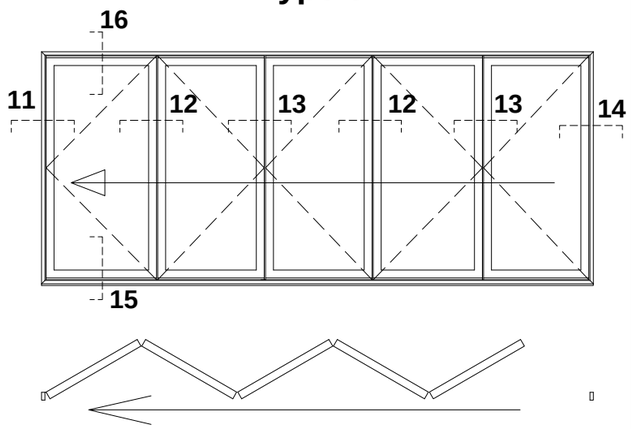

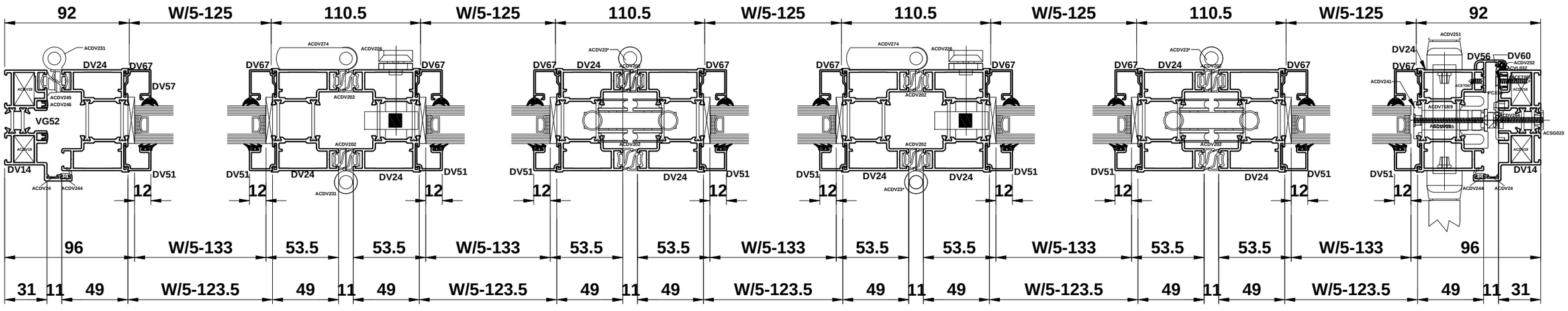

Do Not Scale From This Drawing

Visofold 2000

Type 6i With DV23 & Low Threshold - Open In

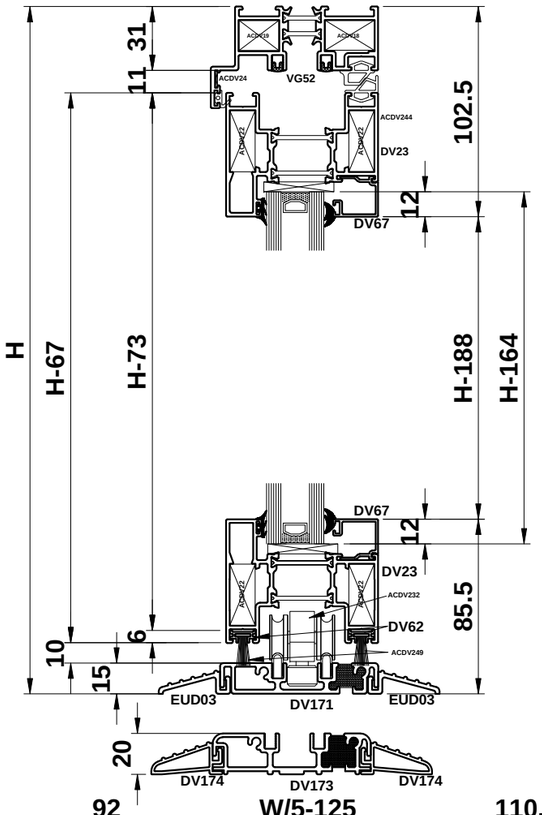

PROFILE CUTTING SCHEDULE (DV171)

DV14		1		W
DV14		2		H
DV171		1		W-66
EUD03		1		W-66
EUD03		1		W-99
DV23		5		W/5-123.5
DV24		10		H-73
DV25		5		W/5-123.5
DV51		10		H-278
DV56		1		H-73
DV63 or DV67	or	10		W/3-125
DV63 or DV67	or	10		H-244 H-278
DV60		1		H-46
DV62		10		W/5-123.5
VG52		2		W-62
VG52		4		H-42
VG53		2		W-66
PCX36		1		H-73

PROFILE CUTTING SCHEDULE (DV173)

DV173		1		W-66
DV174		1		W-66
DV174		1		W-99
DV24		10		H-78
DV51		10		H-283
DV56		1		H-78
DV63 or DV67	or	10		H-249 H-283
DV60		1		H-51
PCX36		1		H-78

Note: PCX15 required for leaf heights over 2285mm.

ACCESSORIES

ACDV18	2	CLEAT FOR DV14
ACDV19	2	CLEAT FOR DV14
ACDV22	40	CLEAT FOR DV23
ACDV24	2	CHEVRON FOR DV14
ACDV244	1 x (W-90) + 2 x (H-60)	FLIPPER GASKET
ACDV245	1 x (W-62) + 1 x (H-42)	SEALING GASKET
ACDV202	18 x (H-67)	SEALING GASKET
ACDV246	1 x (W-62) + 1 x (H-42)	SEALING GASKET
ACDV226	2	SHOOTBOLT HANDLE
ACDV227	2	SHOOTBOLT GEARBOX
ACDV228	2 (PAIRS)	SHOOTBOLT ROD
ACDV259	2 (PAIRS)	SHOOTBOLT GUIDE
ACDV230	2	SHOOTBOLT COVER
ACDV231	16	INTERMEDIATE HINGE
ACDV232	2	BOTTOM ROLLER HINGE
ACDV233	2	TOP GUIDE HINGE
ACDV274	2	D-HANDLE
ACDV718/9	1	MULTI-POINT LOCK
ACDV251	1 (PAIR)	LEVER HANDLES
ACDV56	1 (PAIR)	END CAP FOR DV56
ACDV252	1	KEEP GUIDE
ACDV257	3 (SET OF 4)	INFILL BLOCK
ACDV171	1 (PAIR)	END CAPS FOR DV171
ACVL032	1 (H-67)	DV56 FLIPPER GASKET
ACMX01603 (SL)	2	HALF CYLINDER
ACDV258 (SL)	1	50/50 CYLINDER
ACET060	2	SCREW FOR ACDV252
ACDV241	11	FIXING BLOCK FOR LOCK
ACDV265	11	FIXING SCREW FOR LOCK
ACET069	4	SCREW FOR ACDV225/6
ACDR052	4	SCREW FOR DV171/3
ACVG31	10 x (W/5-133) + 10 x (H-254)	EXTERNAL GLAZING GASKET
ACVG34	10 x (W/5-133) + 10 x (H-254)	INTERNAL GLAZING GASKET
ACDV249	10 x (W/5-35.5)	WOOLPILE
ACDV261	3 (SET OF 4)	INFILL BLOCK
ACSG023	11	FIXING PLATE FOR KEEP
ACDV264	11	SCREW FOR KEEP
ACET067	11	SCREW FOR DV56

Type 6i

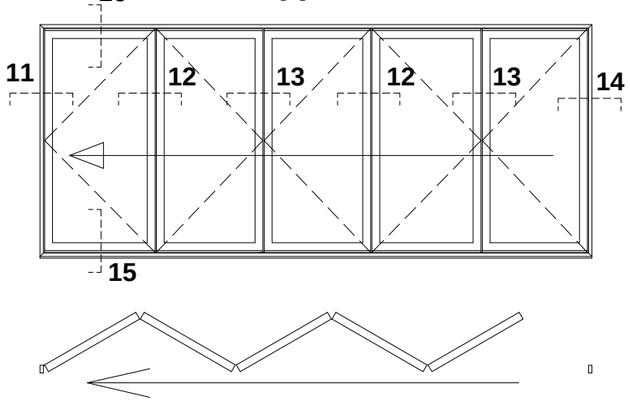

GLASS DEDUCTIONS

DV171	5 x	W/5 - 133	H - 254
DV173	5 x	W/5 - 133	H - 259

IMPORTANT NOTE:
Min. Sash Width 700mm / Max. Vent Width 1000mm
Max. Sash Weight 100kg
Max. Sash Height 2400mm Dependant On Site Conditions
Always Measure In the Last Vent.

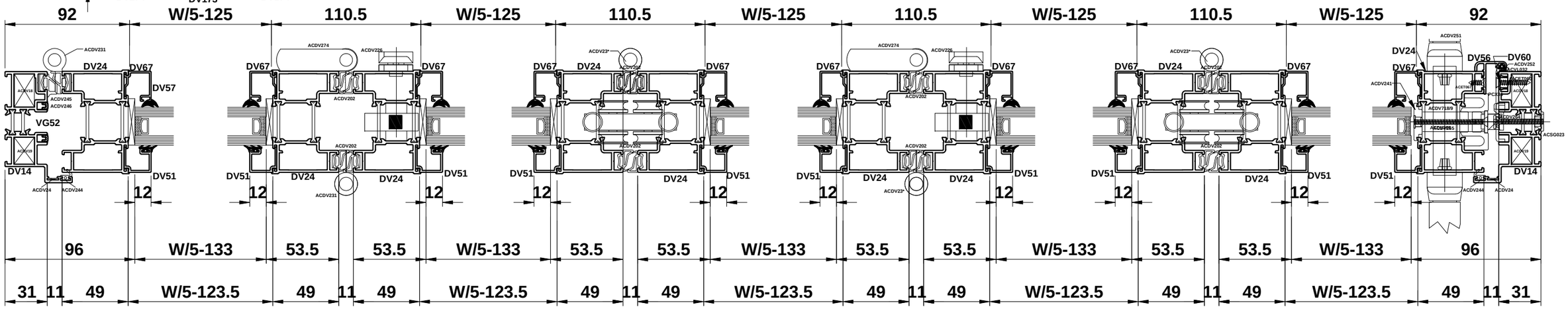

Do Not Scale From This Drawing

Type 7i With Standard Threshold - Open In

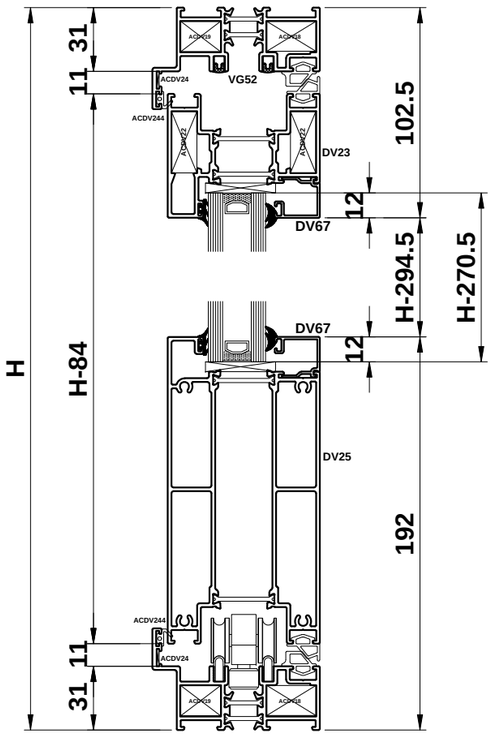

PROFILE CUTTING SCHEDULE

DV14		2		W	
DV14		2		H	
DV23		6		W/6-122.5	
DV24		12		H-84	
DV25		6		W/6-122.5	
DV51		12		H-294.5	
DV56		2		H-84	
DV63 or DV67	or	12		W/6-124	
DV63 or DV67	or	12		H-260.5	H-294.5
VG52		2		W-62	
VG52		4		H-62	
VG53		2		W-62	
DV68		2		H-84	
PCX15		1		H-84	
PCX36		2		H-84	

Note: PCX15 required for master door if leaf height is over 2285mm.

GLASS SIZES	6 X	W/6 - 132
		H - 271.5

IMPORTANT NOTE:
Min. Sash Width 700mm / Max. Vent Width 1000mm
Max. Sash Weight 100kg
Max. Sash Height 2400mm Dependant On Site Conditions
Always Measure In the Last Vent.

ACCESSORIES

ACDV18	4	CLEAT FOR DV14
ACDV19	4	CLEAT FOR DV14
ACDV22	24	CLEAT FOR DV23
ACDV24	4	CHEVRON FOR DV14
ACDV244	2 x (W-90) + 2 x (H-90)	FLIPPER GASKET
ACDV245	2 x (W-62) + 2 x (H-62)	SEALING GASKET
ACDV202	18 x (H-84)	SEALING GASKET
ACDV246	2 x (W-62) + 2 x (H-62)	SEALING GASKET
ACDV225 or 226	3	SHOOTBOLT HANDLE
ACDV227	3	SHOOTBOLT GEARBOX
ACDV228	3 (PAIRS)	SHOOTBOLT ROD
ACDV259	3 (PAIRS)	SHOOTBOLT GUIDE
ACDV230	2	SHOOTBOLT COVER
ACDV231	20	INTERMEDIATE HINGE
ACDV232	2	BOTTOM ROLLER HINGE
ACDV233	2	TOP GUIDE HINGE
ACDV274	2	D-HANDLE
ACDV718/9	1	MULTI-POINT LOCK
ACDV251	1 (PAIR)	LEVER HANDLES
ACDV56	2 (PAIRS)	END CAP FOR DV56
ACDV257	6 (SET OF 4)	INFILL BLOCK
ACVL032	2 x (H-84)	DV56 FLIPPER GASKET
ACMX01603 (SL)	3	HALF CYLINDER
ACDV241	22	FIXING BLOCK FOR LOCK & KEEPS
ACDV265	22	FIXING SCREW FOR LOCK & KEEPS
ACDV258	1	50/50 CYLINDER
ACET131	2	DRAIN HOLE COVER
ACET060	22	SCREW FOR DV56
ACET069	30	SCREW FOR ACDV225/6 & DV23
ACDR052	48	SCREW FOR DV25
ACVG31	12 x (W/6-134) + 12 x (H-271)	EXTERNAL GLAZING GASKET
ACVG34	12 x (W/6-134) + 12 x (H-271)	INTERNAL GLAZING GASKET

Type 7i

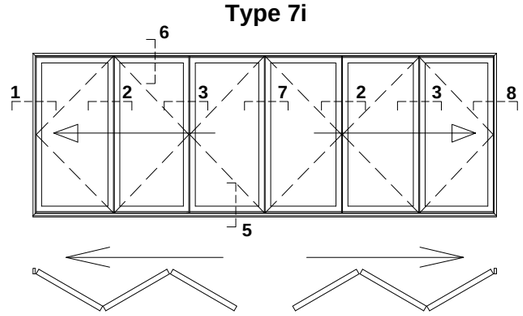

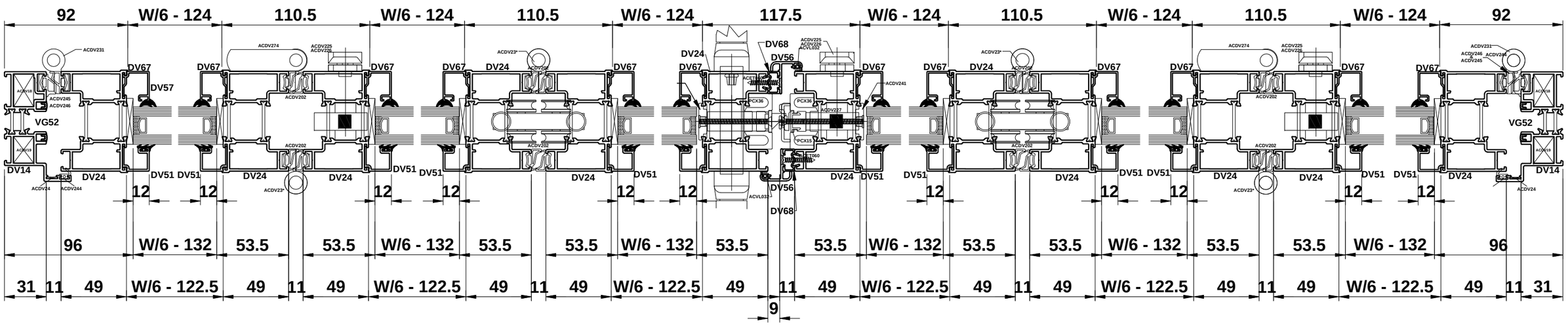

Do Not Scale From This Drawing

Visofold 2000

Type 7i With Low Threshold - Open In

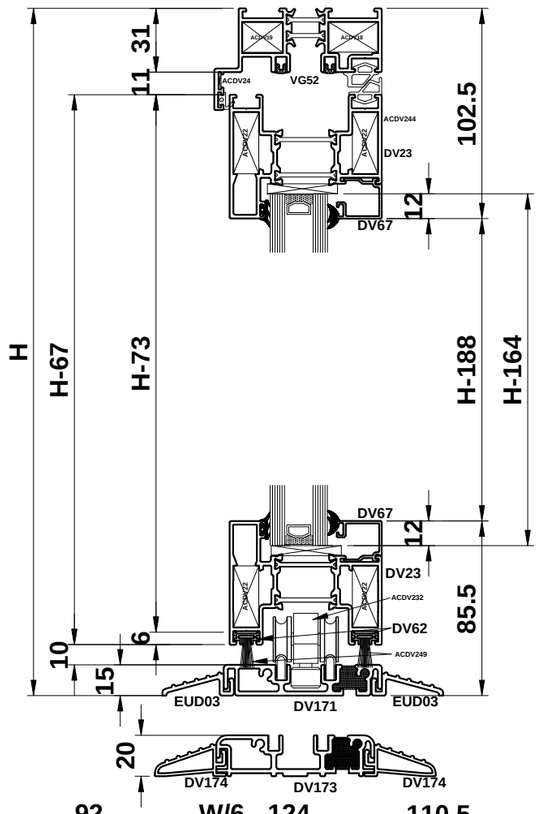

PROFILE CUTTING SCHEDULE (DV171)

DV14		1		W	
DV14		2		H	
DV171		1		W-66	
EUD03		1		W-66	
EUD03		1		W-99	
DV23		6		W/6-122.5	
DV24		6		H-73	
DV25		6		W/6-122.5	
DV51		12		H-278	
DV56		2		H-73	
DV63 or DV67	or	12		W/6-124	
DV63 or DV67	or	12		H-244	H-278
DV62		12		W/6-122.5	
VG52		2		W-62	
VG52		4		H-42	
VG53		2		W-66	
DV68		2		H-73	
PCX15		1		H-73	
PCX36		2		H-73	

PROFILE CUTTING SCHEDULE (DV173)

DV173		1		W-66	
DV174		1		W-66	
DV174		1		W-99	
DV24		12		H-78	
DV51		12		H-283	
DV56		1		H-78	
DV63 or DV67	or	12		H-249	H-283
DV68		2		H-78	
PCX15		1		H-78	
PCX36		2		H-78	

ACCESSORIES

ACDV18	2	CLEAT FOR DV14
ACDV19	2	CLEAT FOR DV14
ACDV22	12	CLEAT FOR DV23
ACDV24	2	CHEVRON FOR DV14
ACDV244	1 x (W-90) + 2 x (H-60)	FLIPPER GASKET
ACDV245	1 x (W-62) + 2 x (H-42)	SEALING GASKET
ACDV202	18 x (H-84)	SEALING GASKET
ACDV246	1 x (W-62) + 2 x (H-42)	SEALING GASKET
ACDV225 or 226	3	SHOOTBOLT HANDLE
ACDV227	3	SHOOTBOLT GEARBOX
ACDV228	3 (PAIRS)	SHOOTBOLT ROD
ACDV259	3 (PAIRS)	SHOOTBOLT GUIDE
ACDV230	2	SHOOTBOLT COVER
ACDV231	20	INTERMEDIATE HINGE
ACDV232	2	BOTTOM ROLLER HINGE
ACDV233	2	TOP GUIDE HINGE
ACDV274	2	D-HANDLE
ACDV718/9	1	MULTI-POINT LOCK
ACDV251	1 (PAIR)	LEVER HANDLES
ACDV56	2 (PAIRS)	END CAP FOR DV56
ACDV257	3 (SET OF 4)	INFILL BLOCK
ACDV171/3	1 (PAIR)	END CAPS FOR DV171/173
ACMX01603 (SL)	3	HALF CYLINDER
ACDV258	1	50/50 CYLINDER
ACET060	22	SCREW FOR DV56
ACDV241	22	FIXING BLOCK FOR LOCK & KEEPS
ACDV265	22	FIXING SCREW FOR LOCK & KEEPS
ACET069	30	SCREW FOR ACDV225/6 & DV23
ACDR052	52	SCREW FOR DV25 & DV171/3
ACVG31	12 x (W/6-134) + 12 x (H-254)	EXTERNAL GLAZING GASKET
ACVG34	12 x (W/6-134) + 12 x (H-254)	INTERNAL GLAZING GASKET
ACDV249	12 x (W/6-22.5)	WOOLPILE
ACDV261	3 (SET OF 4)	INFILL BLOCK

Note: PCX15 required for master door if leaf height is over 2285mm.

Type 7i

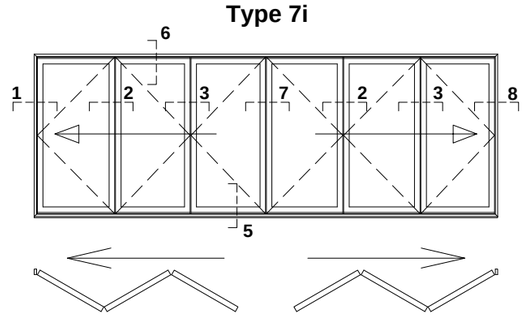

GLASS DEDUCTIONS

DV171	6 x	W/6 - 132	H - 253.5
DV173	6 x	W/6 - 132	H - 258.5

IMPORTANT NOTE:
Min. Sash Width 700mm / Max. Vent Width 1000mm
Max. Sash Weight 100kg
Max. Sash Height 2400mm Dependant On Site Conditions
Always Measure In the Last Vent.

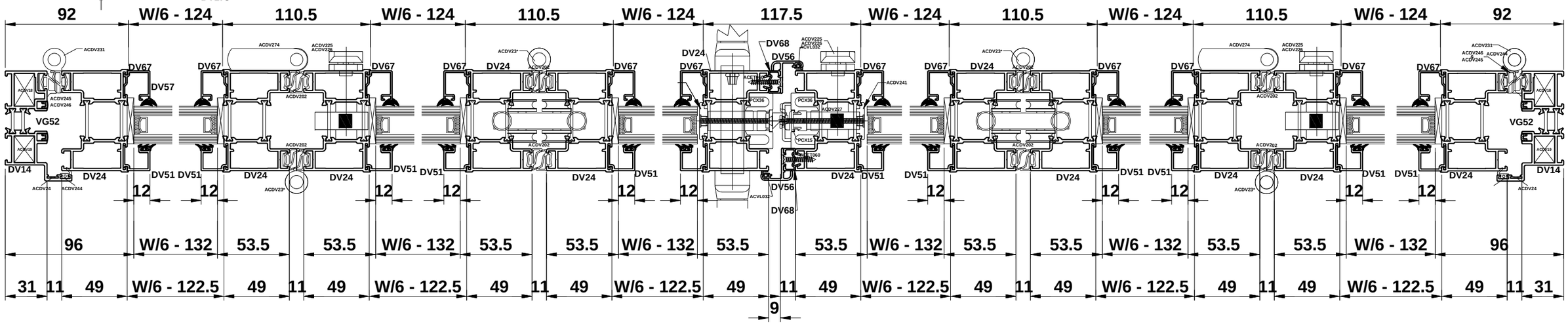

Do Not Scale From This Drawing

Visofold 2000

Type 7i With DV23 & Standard Threshold - Open In

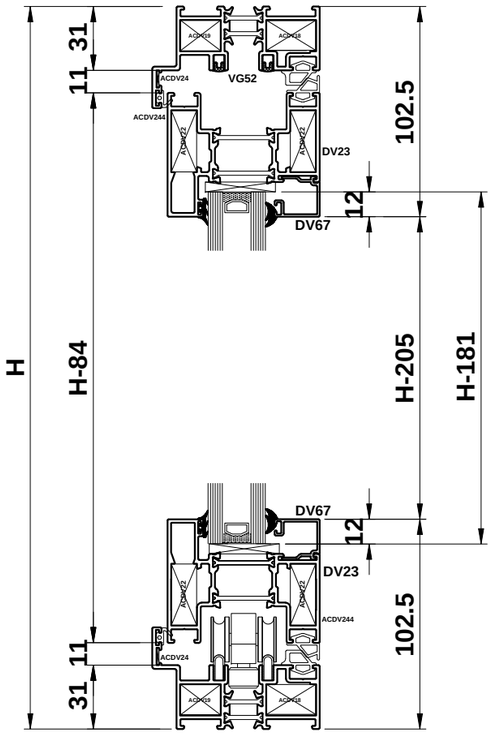

PROFILE CUTTING SCHEDULE

DV14		2		W	
DV14		2		H	
DV23		12		W/6-122.5	
DV24		12		H-84	
DV51		12		H-205	
DV56		2		H-84	
DV63 or DV67	or	12		W/6-124	
DV63 or DV67	or	12		H-222	H-188
VG52		2		W-62	
VG52		4		H-62	
VG53		2		W-62	
DV68		2		H-84	
PCX15		1		H-84	
PCX36		2		H-84	

Note: PCX15 required for master door if leaf height is over 2285mm.

GLASS SIZES		
6 X	W/6 - 132	
	H - 229	

IMPORTANT NOTE:
Min. Sash Width 700mm / Max. Vent Width 1000mm
Max. Sash Weight 100kg
Max. Sash Height 2400mm Dependant On Site Conditions
Always Measure In the Last Vent.

ACCESSORIES

ACDV18	4	CLEAT FOR DV14
ACDV19	4	CLEAT FOR DV14
ACDV22	48	CLEAT FOR DV23
ACDV24	4	CHEVRON FOR DV14
ACDV244	2 x (W-90) + 2 x (H-90)	FLIPPER GASKET
ACDV245	2 x (W-62) + 2 x (H-62)	SEALING GASKET
ACDV202	18 x (H-84)	SEALING GASKET
ACDV246	2 x (W-62) + 2 x (H-62)	SEALING GASKET
ACDV225 or 226	3	SHOOTBOLT HANDLE
ACDV227	3	SHOOTBOLT GEARBOX
ACDV228	3 (PAIRS)	SHOOTBOLT ROD
ACDV259	3 (PAIRS)	SHOOTBOLT GUIDE
ACDV230	2	SHOOTBOLT COVER
ACDV231	20	INTERMEDIATE HINGE
ACDV232	2	BOTTOM ROLLER HINGE
ACDV233	2	TOP GUIDE HINGE
ACDV274	2	D-HANDLE
ACDV718/9	1	MULTI-POINT LOCK
ACDV251	1 (PAIR)	LEVER HANDLES
ACDV56	2 (PAIRS)	END CAP FOR DV56
ACDV257	6 (SET OF 4)	INFILL BLOCK
ACVL032	2 x (H-84)	DV56 FLIPPER GASKET
ACMX01603 (SL)	3	HALF CYLINDER
ACDV241	22	FIXING BLOCK FOR LOCK & KEEPS
ACDV265	22	FIXING SCREW FOR LOCK & KEEPS
ACDV258	1	50/50 CYLINDER
ACET131	2	DRAIN HOLE COVER
ACET060	22	SCREW FOR DV56
ACET069	30	SCREW FOR ACDV225/6 & DV23
ACDR052	48	SCREW FOR DV25
ACVG31	12 x (W/6-134) + 12 x (H-271)	EXTERNAL GLAZING GASKET
ACVG34	12 x (W/6-134) + 12 x (H-271)	INTERNAL GLAZING GASKET

Type 7i

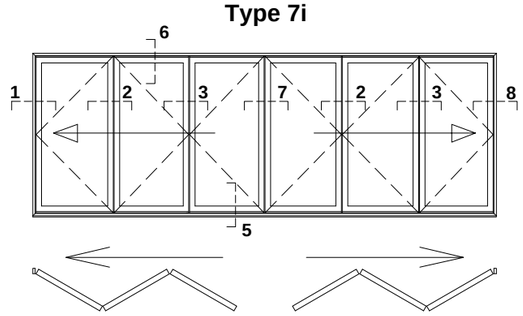

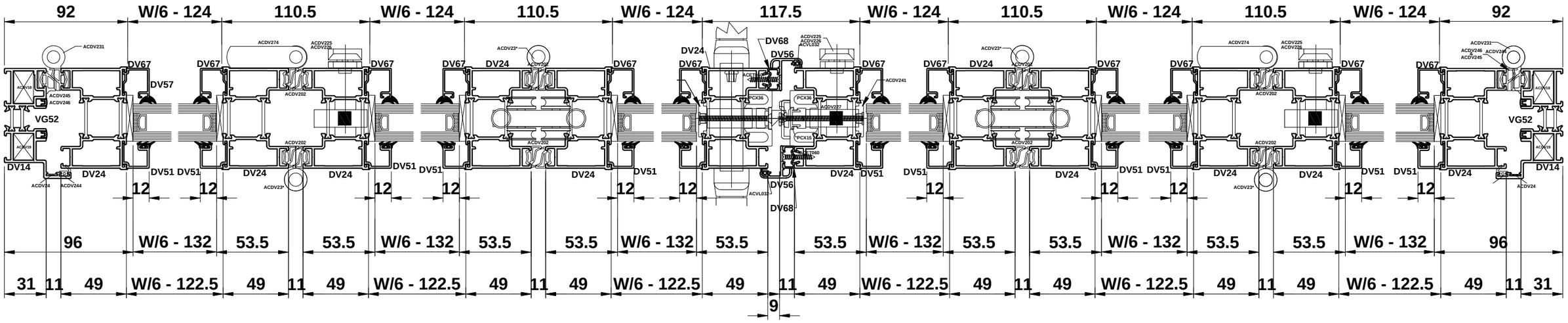

Do Not Scale From This Drawing

Type 7i With DV23 & Low Threshold - Open In

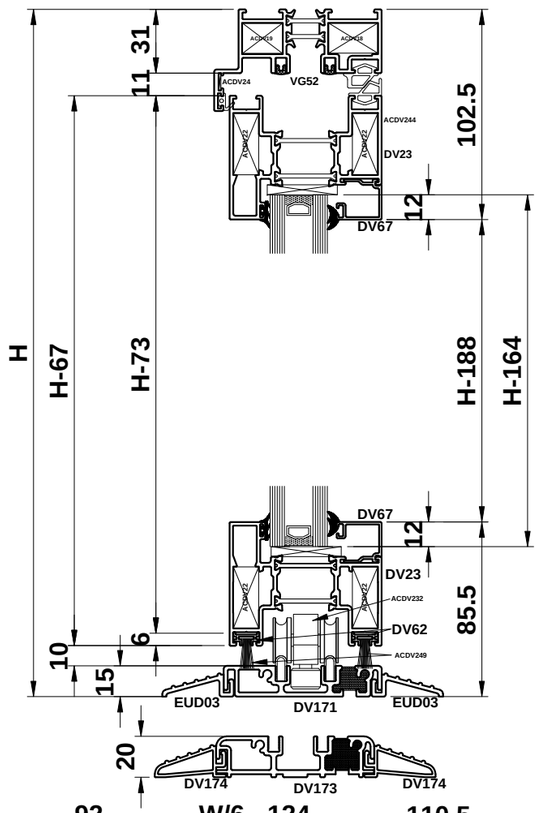

PROFILE CUTTING SCHEDULE (DV171)

DV14		1		W	
DV14		2		H	
DV171		1		W-66	
EUD03		1		W-66	
EUD03		1		W-99	
DV23		6		W/6-122.5	
DV24		12		H-73	
DV51		12		H-188	
DV56		2		H-73	
DV63 or DV67	or	12		W/6-124	
DV63 or DV67	or	12		H-154	H-188
DV62		12		W/6-122.5	
VG52		2		W-62	
VG52		4		H-42	
VG53		2		W-66	
DV68		2		H-73	
PCX15		1		H-73	
PCX36		2		H-73	

PROFILE CUTTING SCHEDULE (DV173)

DV173		1		W-66	
DV174		1		W-66	
DV174		1		W-99	
DV24		6		H-78	
DV51		6		H-188	
DV56		1		H-78	
DV63 or DV67	or	6		H-222	H-188
DV68		2		H-78	
PCX15		1		H-78	
PCX36		2		H-78	

ACCESSORIES

ACDV18	2	CLEAT FOR DV14
ACDV19	2	CLEAT FOR DV14
ACDV22	48	CLEAT FOR DV23
ACDV24	2	CHEVRON FOR DV14
ACDV244	1 x (W-90) + 2 x (H-60)	FLIPPER GASKET
ACDV245	1 x (W-62) + 2 x (H-42)	SEALING GASKET
ACDV202	18 x (H-84)	SEALING GASKET
ACDV246	1 x (W-62) + 2 x (H-42)	SEALING GASKET
ACDV225 or 226	3	SHOOTBOLT HANDLE
ACDV227	3	SHOOTBOLT GEARBOX
ACDV228	3 (PAIRS)	SHOOTBOLT ROD
ACDV259	3 (PAIRS)	SHOOTBOLT GUIDE
ACDV230	2	SHOOTBOLT COVER
ACDV231	20	INTERMEDIATE HINGE
ACDV232	2	BOTTOM ROLLER HINGE
ACDV233	2	TOP GUIDE HINGE
ACDV274	2	D-HANDLE
ACDV718/9	1	MULTI-POINT LOCK
ACDV251	1 (PAIR)	LEVER HANDLES
ACDV56	2 (PAIRS)	END CAP FOR DV56
ACDV257	3 (SET OF 4)	INFILL BLOCK
ACDV171/3	1 (PAIR)	END CAPS FOR DV171/173
ACMX01603 (SL)	3	HALF CYLINDER
ACDV258	1	50/50 CYLINDER
ACET060	22	SCREW FOR DV56
ACDV241	22	FIXING BLOCK FOR LOCK & KEEPS
ACDV265	22	FIXING SCREW FOR LOCK & KEEPS
ACET069	30	SCREW FOR ACDV225/6 & DV23
ACDR052	52	SCREW FOR DV25 & DV171/3
ACVG31	12 x (W/6-134) + 12 x (H-254)	EXTERNAL GLAZING GASKET
ACVG34	12 x (W/6-134) + 12 x (H-254)	INTERNAL GLAZING GASKET
ACDV249	12 x (W/6-22.5)	WOOLPILE
ACDV261	3 (SET OF 4)	INFILL BLOCK

Note: PCX15 required for master door if leaf height is over 2285mm.

Type 7i

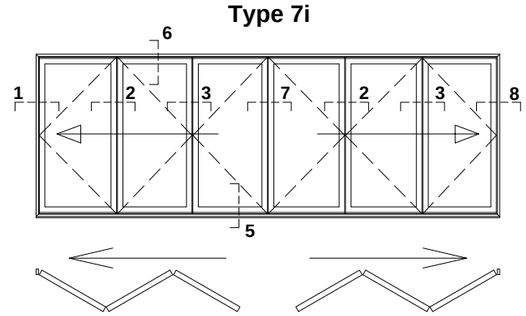

GLASS DEDUCTIONS

DV171	6 x	W/6 - 132	H - 164
DV173	6 x	W/6 - 132	H - 169

IMPORTANT NOTE:
Min. Sash Width 700mm / Max. Vent Width 1000mm
Max. Sash Weight 100kg
Max. Sash Height 2400mm Dependant On Site Conditions
Always Measure In the Last Vent.

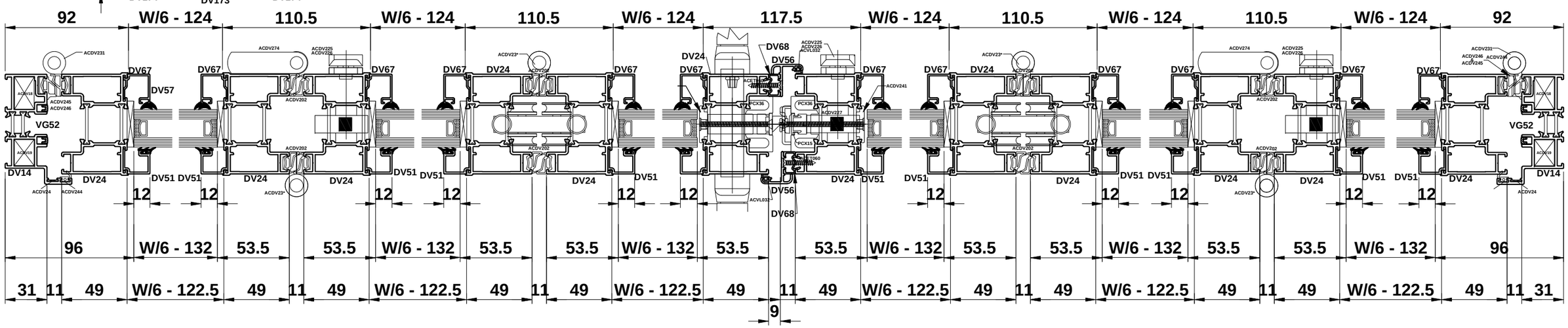

Do Not Scale From This Drawing

Visofold 2000

Single Door With Standard Threshold - Open In

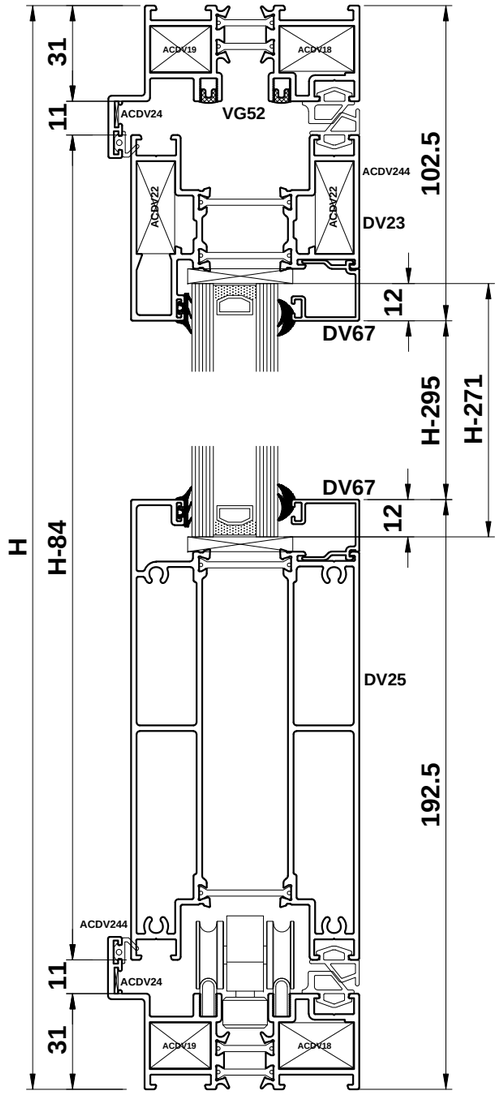

PROFILE CUTTING SCHEDULE

DV14		2		W	
DV14		2		H	
DV23		1		W-182	
DV24		2		H-84	
DV25		1		W-182	
DV51		2		H-295	
DV56		1		H-84	
DV63 or DV67	or	2		W-182	
DV63 or DV67	or	2		H-261	H-295
VG52		4		W-62	
VG52		4		H-62	
PCX36		1		H-84	

Note: PCX15 required for leaf heights over 2285mm.

GLASS SIZES		
	1 X	W - 192
		H - 271.5

IMPORTANT NOTE:
Min. Sash Width 700mm / Max. Vent Width 1000mm
Max. Sash Weight 100kg
Max. Sash Height 2400mm Dependant On Site Conditions
Always Measure In the Last Vent.

ACCESSORIES

ACDV18	4	CLEAT FOR DV14
ACDV19	4	CLEAT FOR DV14
ACDV22	4	CLEAT FOR DV23
ACDV24	4	CHEVRON FOR DV14
ACDV244	2 x (W-90) + 2 x (H-90)	FLIPPER GASKET
ACDV245	2 x (W-62)	SEALING GASKET
ACDV245	1 x (H-84)	SEALING GASKET
ACDV246	2 x (W-84)	SEALING GASKET
ACDV246	1 x (H-84)	SEALING GASKET
ACDV231	4	INTERMEDIATE HINGE
ACDV718/9	1	MULTI-POINT LOCK
ACDV251	1 (PAIR)	LEVER HANDLES
ACDV56	1 (PAIR)	END CAP FOR DV56
ACDV252	1	KEEP GUIDE
ACDV257	1 (SET OF 4)	INFILL BLOCK
ACVL032	1 x (H-84)	DV56 FLIPPER GASKET
ACDV258	1	50/50 CYLINDER
ACET131	2	DRAIN HOLE COVER
ACET060	35	SCREW FOR ACDV252
ACET067	11	SCREW FOR DV56
ACET069	4	DV23
ACDR052	8	SCREW FOR DV25
ACDV241	11	FIXING BLOCK FOR LOCK
ACDV264	11	FIXING SCREW FOR KEEP
ACDV265	11	FIXING SCREW FOR LOCK
ACSG023	11	FIXING BLOCK FOR KEEP
ACVG31	2 x (W-192) + 2 x (H-271)	EXTERNAL GLAZING GASKET
ACVG34	2 x (W-192) + 2 x (H-271)	INTERNAL GLAZING GASKET

Single Door

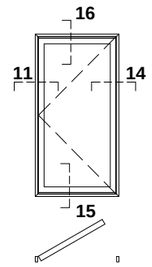

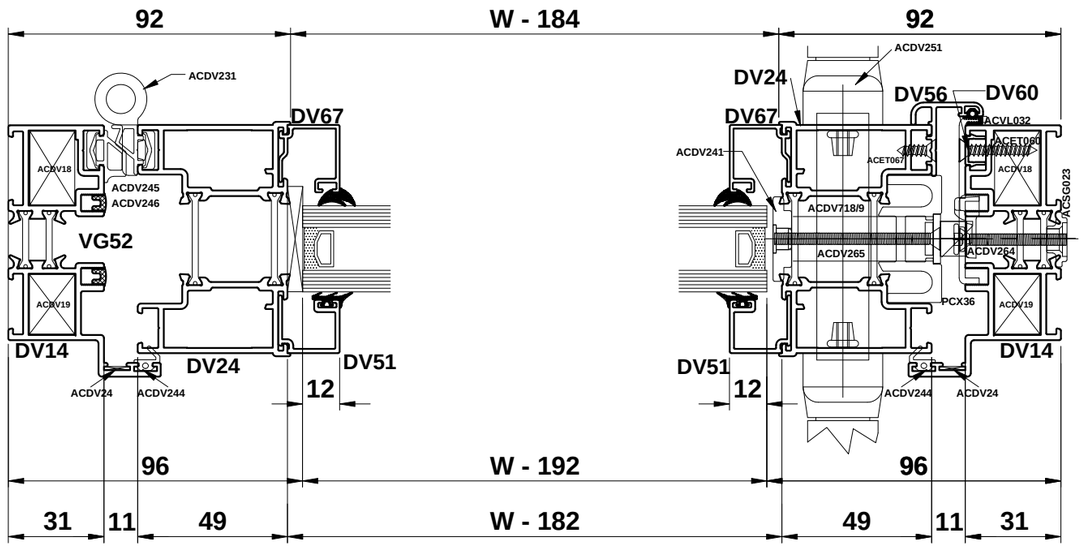

Do Not Scale From This Drawing

Single Door With Low Threshold - Open In

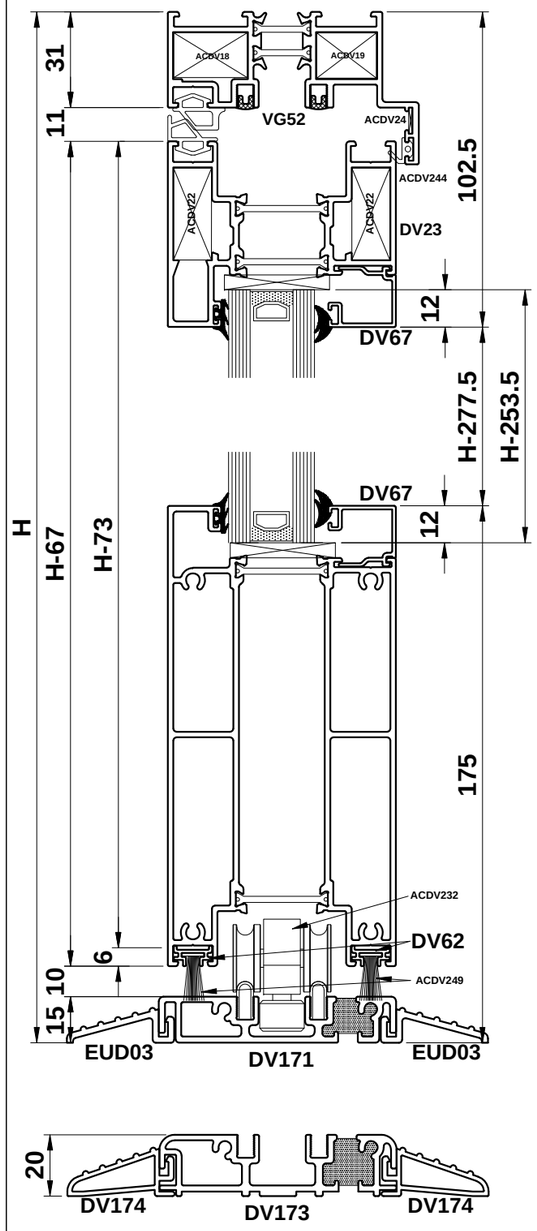

PROFILE CUTTING SCHEDULE (DV171)

DV14		1		W	
DV14		2		H	
DV171		1		W-66	
EUD03		1		W-66	
EUD03		1		W-99	
DV23		1		W-182	
DV24		2		H-73	
DV25		1		W-182	
DV51		2		H-278	
DV56		1		H-73	
DV63 or DV67	or	2		W-184	
DV63 or DV67	or	2		H-244	H-278
DV62		2		W-182	
VG52		4		W-62	
VG52		4		H-42	
PCX36		1		H-73	

PROFILE CUTTING SCHEDULE (DV173)

DV173		1		W-66	
DV174		1		W-66	
DV174		1		W-99	
DV24		2		H-78	
DV51		2		H-283	
DV56		1		H-78	
DV63 or DV67	or	2		H-249	H-283
DV60		1		H-51	
PCX36		1		H-78	

Note: PCX15 required for leaf heights over 2285mm.

ACCESSORIES

ACDV18	4	CLEAT FOR DV14
ACDV19	4	CLEAT FOR DV14
ACDV22	4	CLEAT FOR DV23
ACDV24	4	CHEVRON FOR DV14
ACDV244	1 x (W-90) + 2 x (H-60)	FLIPPER GASKET
ACDV245	1 x (W-62)	SEALING GASKET
ACDV245	1 x (H-84)	SEALING GASKET
ACDV246	1 x (W-84)	SEALING GASKET
ACDV246	1 x (H-84)	SEALING GASKET
ACDV249	1 x (W-84)	WOOLPILE
ACDV231	4	INTERMEDIATE HINGE
ACDV718/9	1	MULTI-POINT LOCK
ACDV251	1 (PAIR)	LEVER HANDLES
ACDV56	1 (PAIR)	END CAP FOR DV56
ACDV252	1	KEEP GUIDE
ACDV257	1 (SET OF 4)	INFILL BLOCK
ACVL032	1 x (H-84)	DV56 FLIPPER GASKET
ACDV258	1	50/50 CYLINDER
ACET131	2	DRAIN HOLE COVER
ACET060	2	SCREW FOR ACDV252
ACET067	11	SCREW FOR DV56
ACET069	4	DV23
ACDR052	12	SCREW FOR DV25
ACDV241	11	FIXING BLOCK FOR LOCK
ACDV264	11	FIXING SCREW FOR KEEP
ACDV265	11	FIXING SCREW FOR LOCK
ACSG023	11	FIXING BLOCK FOR KEEP
ACVG31	2 x (W-192) + 2 x (H-254)	EXTERNAL GLAZING GASKET
ACVG34	2 x (W-192) + 2 x (H-254)	INTERNAL GLAZING GASKET
ACDV261	1 (SET OF 4)	INFILL BLOCK
ACDV171/3	1 (PAIR)	END CAPS FOR DV171/173

Single Door

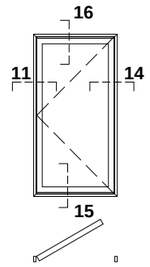

GLASS DEDUCTIONS

DV171	1 x	W - 192	H - 253.5
DV173	1 x	W - 192	H - 258.5

IMPORTANT NOTE:
Min. Sash Width 700mm / Max. Vent Width 1000mm
Max. Sash Weight 100kg
Max. Sash Height 2400mm Dependant On Site Conditions
Always Measure In the Last Vent.

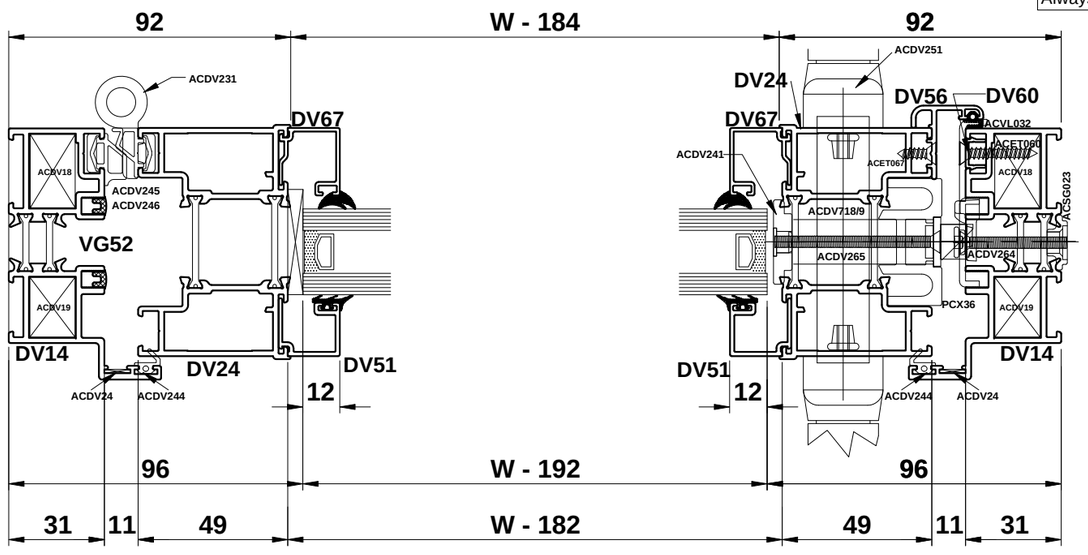

Do Not Scale From This Drawing

Visofold 2000

Single Door With DV23 & Standard Threshold - Open In

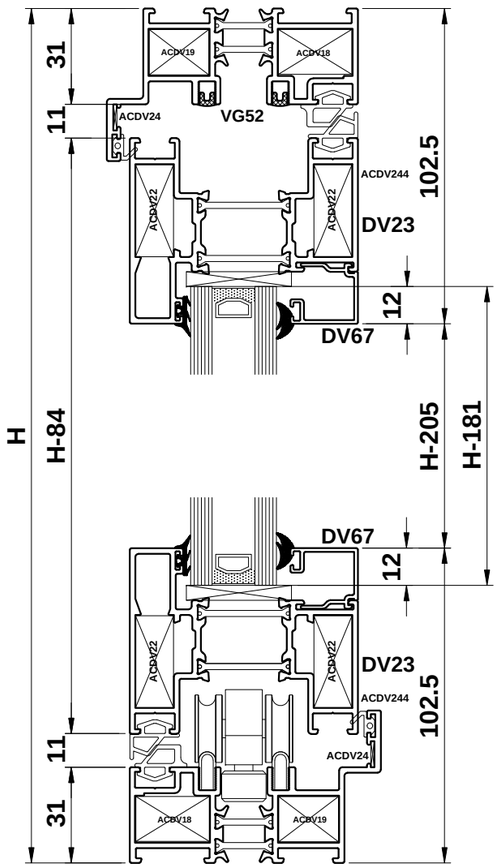

DV14		2		W	
DV14		2		H	
DV23		2		W-182	
DV24		2		H-84	
DV51		2		H-205	
DV56		1		H-84	
DV63 or DV67	or	2		W-182	
DV63 or DV67	or	2		H-239	H-205
VG52		4		W-62	
VG52		4		H-62	
PCX36		1		H-84	

Note: PCX15 required for leaf heights over 2285mm.

GLASS SIZES		
	1 X	W - 192
		H - 181

IMPORTANT NOTE:
Min. Sash Width 700mm / Max. Vent Width 1000mm
Max. Sash Weight 100kg
Max. Sash Height 2400mm Dependant On Site Conditions
Always Measure In the Last Vent.

ACDV18	4	CLEAT FOR DV14
ACDV19	4	CLEAT FOR DV14
ACDV22	8	CLEAT FOR DV23
ACDV24	4	CHEVRON FOR DV14
ACDV244	2 x (W-90) + 2 x (H-90)	FLIPPER GASKET
ACDV245	2 x (W-62) + 1 x (H-62)	SEALING GASKET
ACDV245	1 x (H-84)	SEALING GASKET
ACDV246	2 x (W-84)	SEALING GASKET
ACDV246	1 x (H-84)	SEALING GASKET
ACDV231	4	INTERMEDIATE HINGE
ACDV718/9	1	MULTI-POINT LOCK
ACDV251	1 (PAIR)	LEVER HANDLES
ACDV56	1 (PAIR)	END CAP FOR DV56
ACDV252	1	KEEP GUIDE
ACDV257	1 (SET OF 4)	INFILL BLOCK
ACVL032	1 x (H-84)	DV56 FLIPPER GASKET
ACDV258	1	50/50 CYLINDER
ACET131	2	DRAIN HOLE COVER
ACET060	35	SCREW FOR ACDV252
ACET067	11	SCREW FOR DV56
ACET069	4	DV23
ACDR052	8	SCREW FOR DV25
ACDV241	11	FIXING BLOCK FOR LOCK
ACDV264	11	FIXING SCREW FOR KEEP
ACDV265	11	FIXING SCREW FOR LOCK
ACSG023	11	FIXING BLOCK FOR KEEP
ACVG31	2 x (W-192) + 2 x (H-271)	EXTERNAL GLAZING GASKET
ACVG34	2 x (W-192) + 2 x (H-271)	INTERNAL GLAZING GASKET

Single Door

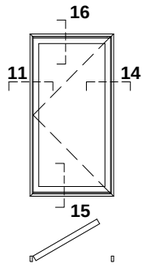

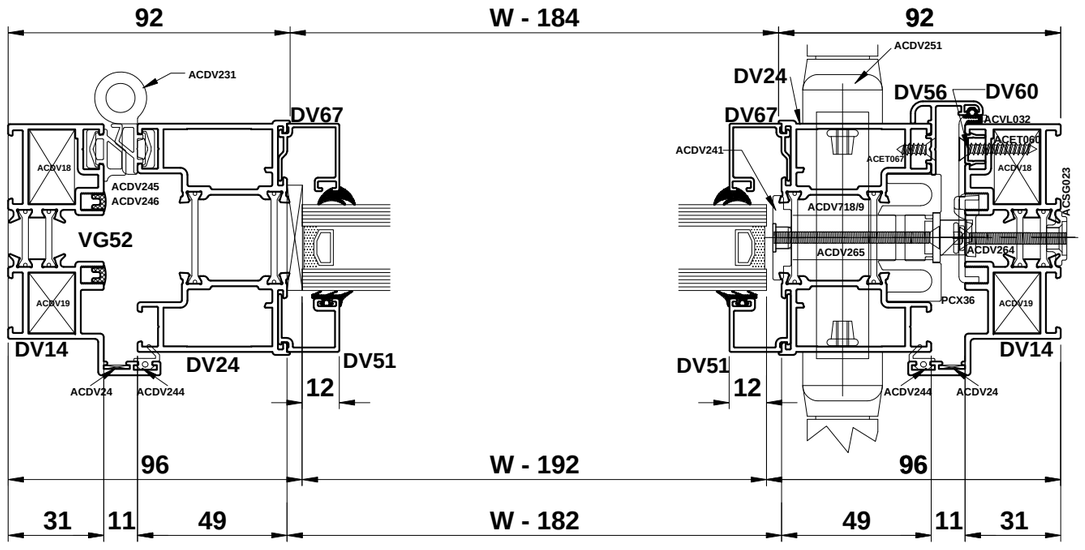

Do Not Scale From This Drawing

Single Door With DV23 & Low Threshold - Open In

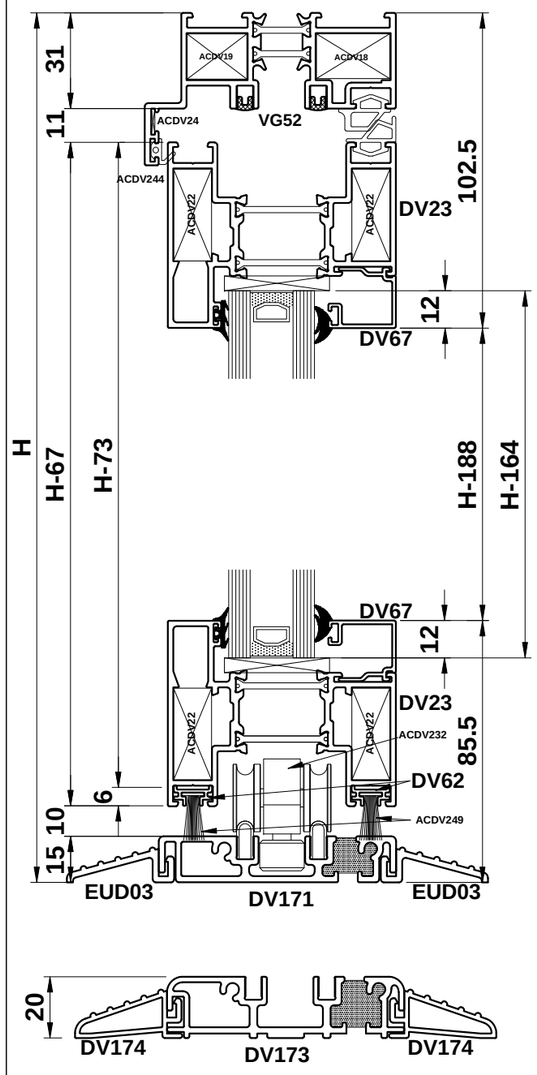

PROFILE CUTTING SCHEDULE (DV171)

DV14		1		W	
DV14		2		H	
DV171		1		W-66	
EUD03		1		W-66	
EUD03		1		W-99	
DV23		1		W-182	
DV24		2		H-73	
DV25		1		W-182	
DV51		2		H-188	
DV56		1		H-73	
DV63 or DV67	or	2		W-184	
DV63 or DV67	or	2		H-222	H-188
DV62		2		W-182	
VG52		4		W-62	
VG52		4		H-42	
PCX36		1		H-73	

PROFILE CUTTING SCHEDULE (DV173)

DV173		1		W-66	
DV174		1		W-66	
DV174		1		W-99	
DV24		2		H-78	
DV51		2		H-283	
DV56		1		H-78	
DV63 or DV67	or	2		H-249	H-283
DV60		1		H-51	
PCX36		1		H-78	

Note: PCX15 required for leaf heights over 2285mm.

ACCESSORIES

ACDV18	4	CLEAT FOR DV14
ACDV19	4	CLEAT FOR DV14
ACDV22	8	CLEAT FOR DV23
ACDV24	4	CHEVRON FOR DV14
ACDV244	1 x (W-90) + 2 x (H-60)	FLIPPER GASKET
ACDV245	1 x (W-62)	SEALING GASKET
ACDV245	1 x (H-73)	SEALING GASKET
ACDV246	1 x (W-73)	SEALING GASKET
ACDV246	1 x (H-73)	SEALING GASKET
ACDV249	1 x (W-73)	WOOLPILE
ACDV231	4	INTERMEDIATE HINGE
ACDV718/9	1	MULTI-POINT LOCK
ACDV251	1 (PAIR)	LEVER HANDLES
ACDV56	1 (PAIR)	END CAP FOR DV56
ACDV252	1	KEEP GUIDE
ACDV257	1 (SET OF 4)	INFILL BLOCK
ACVL032	1 x (H-84)	DV56 FLIPPER GASKET
ACDV258	1	50/50 CYLINDER
ACET131	2	DRAIN HOLE COVER
ACET060	2	SCREW FOR ACDV252
ACET067	11	SCREW FOR DV56
ACET069	4	DV23
ACDR052	12	SCREW FOR DV25
ACDV241	11	FIXING BLOCK FOR LOCK
ACDV264	11	FIXING SCREW FOR KEEP
ACDV265	11	FIXING SCREW FOR LOCK
ACSG023	11	FIXING BLOCK FOR KEEP
ACVG31	2 x (W-192) + 2 x (H-254)	EXTERNAL GLAZING GASKET
ACVG34	2 x (W-192) + 2 x (H-254)	INTERNAL GLAZING GASKET
ACDV261	1 (SET OF 4)	INFILL BLOCK
ACDV171/3	1 (PAIR)	END CAPS FOR DV171/173

Single Door

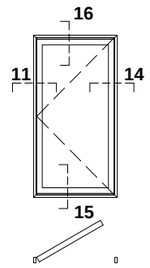

GLASS DEDUCTIONS

DV171	1 x	W - 192	H - 164
DV173	1 x	W - 192	H - 169

IMPORTANT NOTE:
Min. Sash Width 700mm / Max. Vent Width 1000mm
Max. Sash Weight 100kg
Max. Sash Height 2400mm Dependant On Site Conditions
Always Measure In the Last Vent.

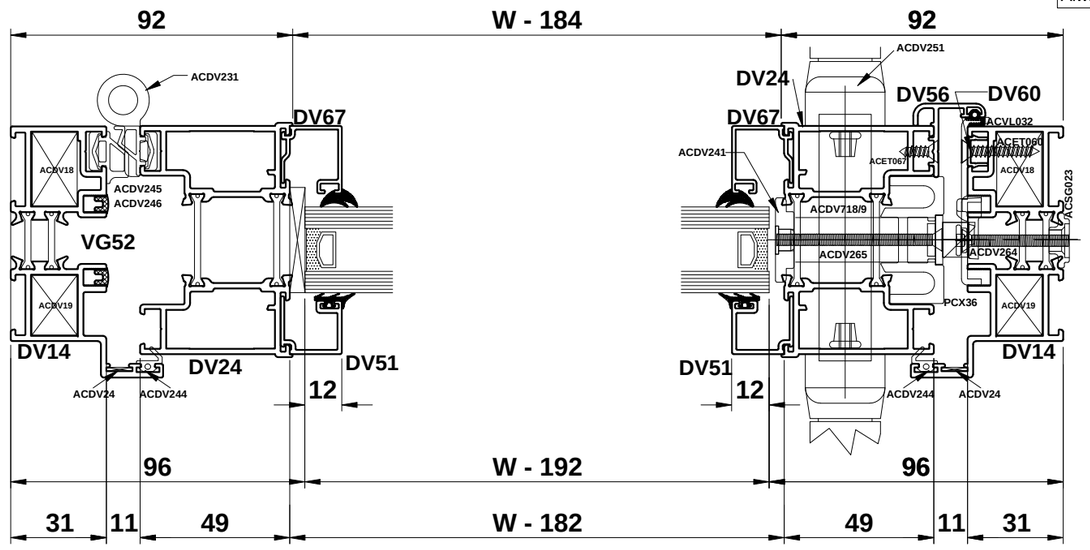

Do Not Scale From This Drawing

Visofold 2000

Double Door With Standard Threshold - Open In

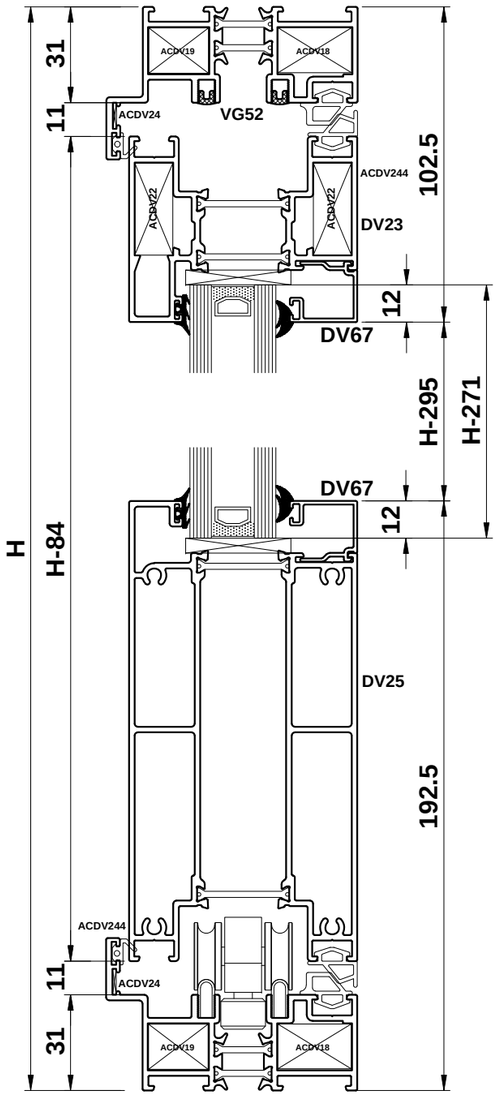

PROFILE CUTTING SCHEDULE

DV14		2		W	
DV14		2		H	
DV23		2		W/2-154.5	
DV24		4		H-84	
DV25		2		W/2-154.5	
DV51		4		H-295	
DV56		2		H-84	
DV63 or DV67	or	4		W/2-152	
DV63 or DV67	or	4		H-261	H-295
VG52		4		W-62	
VG52		4		H-62	
PCX36		2		H-84	
DV68		2		H-84	
PCX15		1		H-84	

Note: PCX15 required for master door if leaf height is over 2285mm.

GLASS SIZES		
2 X	W/2 - 159.5	
	H - 271.5	

IMPORTANT NOTE:
Min. Sash Width 700mm / Max. Vent Width 1000mm
Max. Sash Weight 100kg
Max. Sash Height 2400mm Dependant On Site Conditions
Always Measure In the Last Vent.

ACCESSORIES

ACDV18	4	CLEAT FOR DV14
ACDV19	4	CLEAT FOR DV14
ACDV22	8	CLEAT FOR DV23
ACDV24	4	CHEVRON FOR DV14
ACDV225 or 226	1	SHOOTBOLT HANDLE
ACDV227	1	SHOOTBOLT GEARBOX
ACDV228	1 (PAIR)	SHOOTBOLT ROD
ACDV259	1 (PAIR)	SHOOTBOLT GUIDE
ACDV244	2 x (W-90) + 2 x (H-90)	FLIPPER GASKET
ACDV245	2 x (W-62)	SEALING GASKET
ACDV245	2 x (H-84)	SEALING GASKET
ACDV246	2 x (W/2-154.5)	SEALING GASKET
ACDV246	2 x (H-84)	SEALING GASKET
ACDV231	8	INTERMEDIATE HINGE
ACDV718/9	1	MULTI-POINT LOCK
ACDV251	1 (PAIR)	LEVER HANDLES
ACDV56	1 (PAIR)	END CAP FOR DV56
ACDV257	2 (SET OF 4)	INFILL BLOCK
ACVL032	2 x (H-84)	DV56 FLIPPER GASKET
ACDV258 (SL)	1	50/50 CYLINDER
ACET131	2	DRAIN HOLE COVER
ACET060	22	SCREW FOR DV56
ACET069	6	SCREW FOR DV23 & ACDV225/6
ACDR052	16	SCREW FOR DV25
ACDV241	22	FIXING BLOCK FOR LOCK & KEEPS
ACDV265	22	FIXING SCREW FOR LOCK & KEEPS
ACVG31	2 x (W-192) + 2 x (H-271)	EXTERNAL GLAZING GASKET
ACVG34	2 x (W-192) + 2 x (H-271)	INTERNAL GLAZING GASKET
ACMX01603 (SL)	1	HALF CYLINDER

Double Door

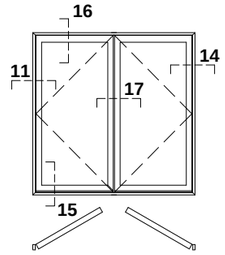

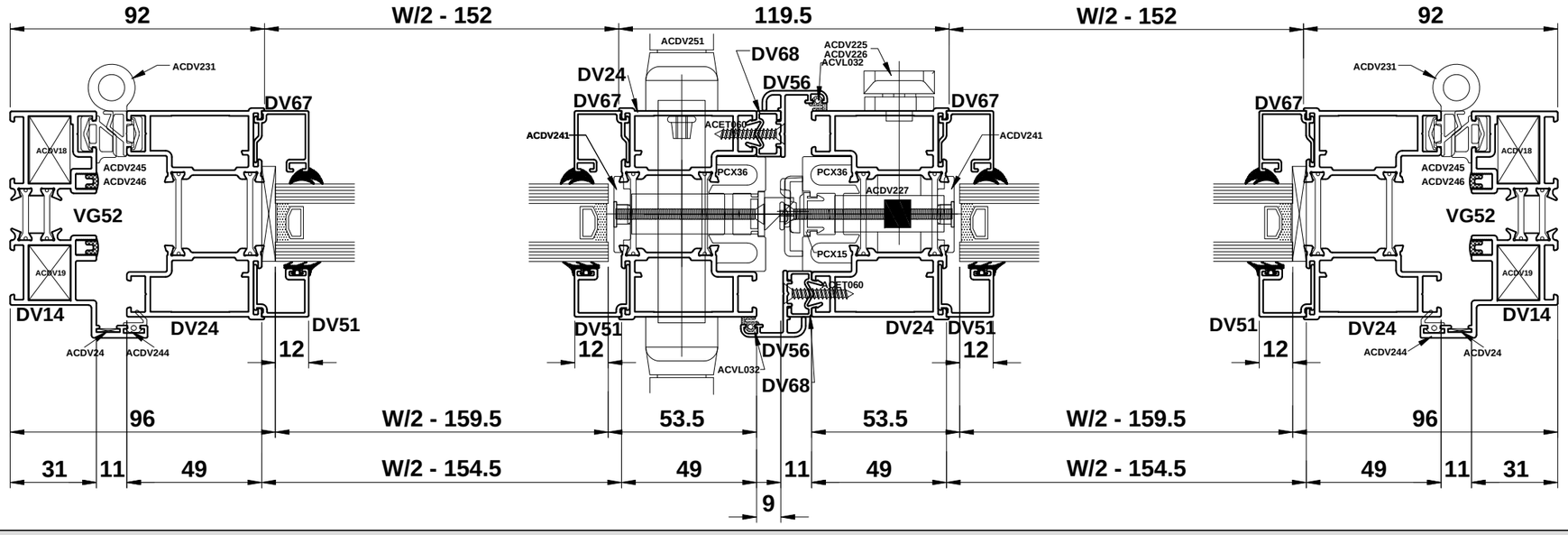

Do Not Scale From This Drawing

Visofold 2000

Double Door With Low Threshold - Open In

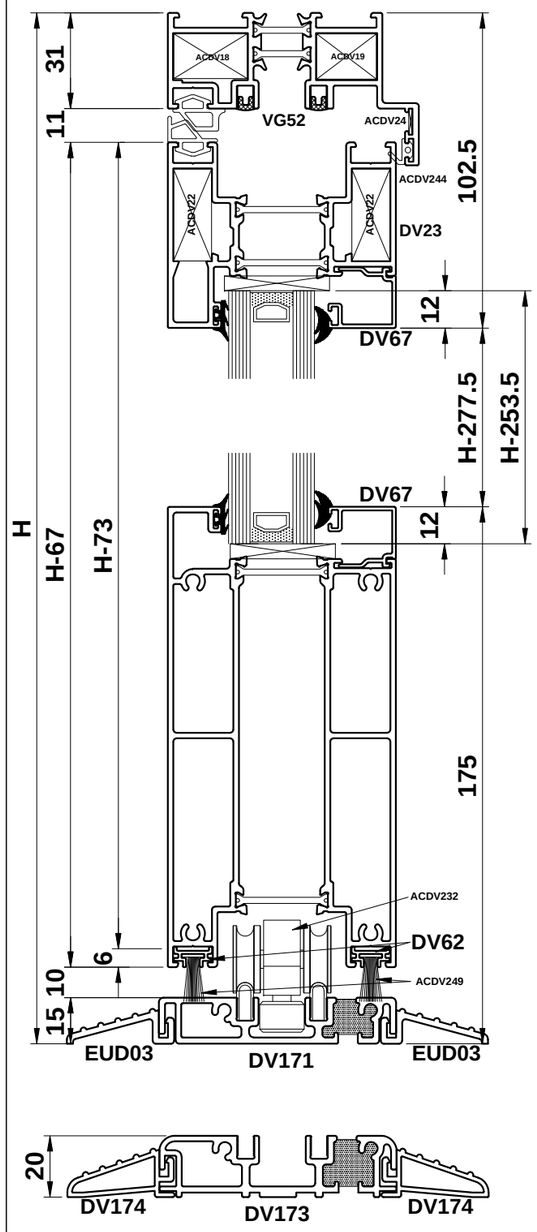

PROFILE CUTTING SCHEDULE (DV171)

DV14		1		W	
DV14		2		H	
DV171		1		W-66	
EUD03		1		W-66	
EUD03		1		W-99	
DV23		2		W/2-154.5	
DV24		4		H-73	
DV25		2		W/2-154.5	
DV51		4		H-278	
DV56		2		H-73	
DV63 or DV67	or	4		W/2-152	
DV63 or DV67	or	4		H-244	H-278
DV62		2		W/2-101	
VG52		4		W-62	
VG52		4		H-42	
PCX36		2		H-73	
DV68		2		H-73	
PCX15		1		H-73	

Note: PCX15 required for master door if leaf height

IMPORTANT NOTE:
Min. Sash Width 700mm / Max. Vent Width 1000mm
Max. Sash Weight 100kg
Max. Sash Height 2400mm Dependant On Site Conditions
Always Measure In the Last Vent.

PROFILE CUTTING SCHEDULE (DV173)

DV173		1		W-66	
DV174		1		W-66	
DV174		1		W-99	
DV24		4		H-78	
DV51		4		H-283	
DV56		2		H-78	
DV63 or DV67	or	4		H-249	H-283
PCX36		2		H-78	
DV68		2		H-78	
PCX15		1		H-78	

DV171	2 x	W - 159.5	H - 253.5
DV173	2 x	W - 159.5	H - 258.5

Double Door

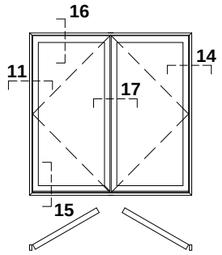

ACCESSORIES

ACDV18	4	CLEAT FOR DV14
ACDV19	4	CLEAT FOR DV14
ACDV22	8	CLEAT FOR DV23
ACDV24	4	CHEVRON FOR DV14
ACDV225 or 226	1	SHOOTBOLT HANDLE
ACDV227	1	SHOOTBOLT GEARBOX
ACDV228	1 (PAIR)	SHOOTBOLT ROD
ACDV259	1 (PAIR)	SHOOTBOLT GUIDE
ACDV244	1 x (W-90) + 2 x (H-90)	FLIPPER GASKET
ACDV245	1 x (W-62)	SEALING GASKET
ACDV245	2 x (H-84)	SEALING GASKET
ACDV246	1 x (W/2-154.5)	SEALING GASKET
ACDV246	2 x (H-84)	SEALING GASKET
ACDV246	1 x (W/2-154.5)	WOOLPILE
ACDV231	8	INTERMEDIATE HINGE
ACDV718/9	1	MULTI-POINT LOCK
ACDV251	1 (PAIR)	LEVER HANDLES
ACDV56	1 (PAIR)	END CAP FOR DV56
ACDV257	1 (SET OF 4)	INFILL BLOCK
ACVL032	2 x (H-84)	DV56 FLIPPER GASKET
ACDV258 (SL)	1	50/50 CYLINDER
ACET131	2	DRAIN HOLE COVER
ACET060	22	SCREW FOR DV56
ACET069	6	SCREW FOR DV23 & ACDV225/6
ACDR052	24	SCREW FOR DV25 & DV171/3
ACDV241	22	FIXING BLOCK FOR LOCK & KEEPS
ACDV265	22	FIXING SCREW FOR LOCK & KEEPS
ACVG31	2 x (W-192) + 2 x (H-271)	EXTERNAL GLAZING GASKET
ACVG34	2 x (W-192) + 2 x (H-271)	INTERNAL GLAZING GASKET
ACMX01603 (SL)	1	HALF CYLINDER
ACDV261	1 (SET OF 4)	INFILL BLOCK
ACDV171/3	1 (PAIR)	END CAPS FOR DV171/173

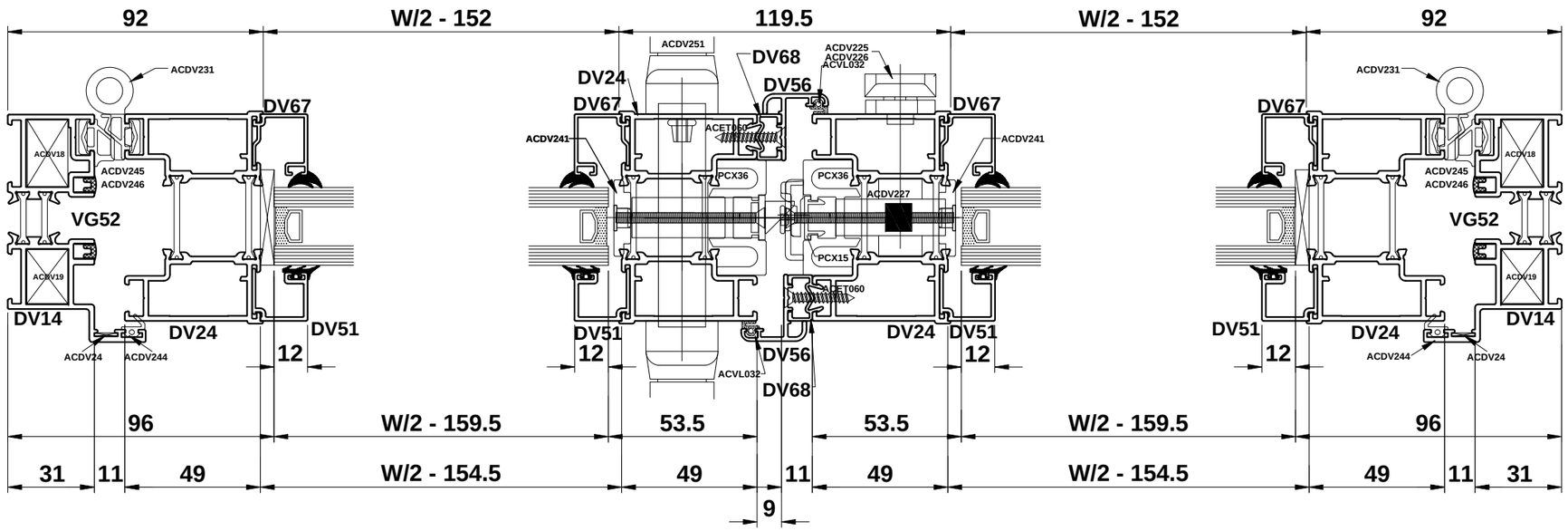

Do Not Scale From This Drawing

Double Door With DV23 & Standard Threshold - Open In

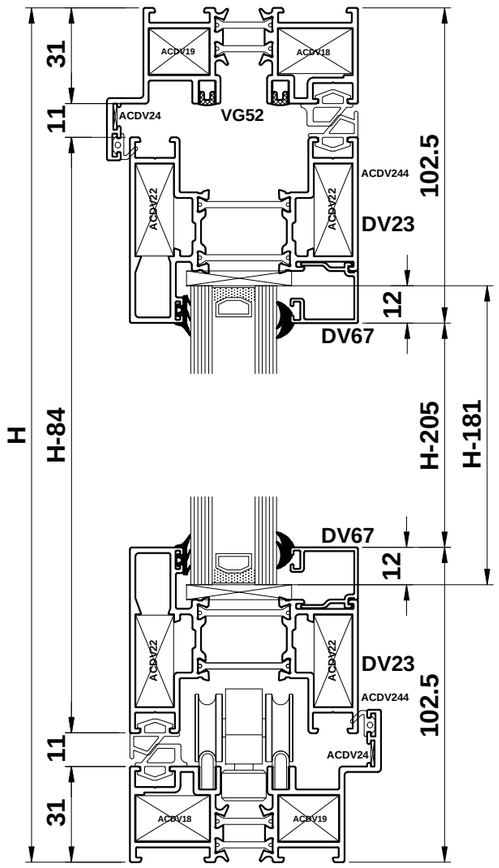

PROFILE CUTTING SCHEDULE

DV14		2		W	
DV14		2		H	
DV23		4		W/2-154.5	
DV24		4		H-84	
DV51		4		H-205	
DV56		2		H-84	
DV63 or DV67	or	4		W/2-154.5	
DV63 or DV67	or	4		H-239	H-205
VG52		4		W-62	
VG52		4		H-62	
PCX36		2		H-84	
DV68		2		H-84	
PCX15		1		H-84	

Note: PCX15 required for master door if leaf height is over 2285mm.

GLASS SIZES		
2 X	W/2 - 152	
	H - 181	

IMPORTANT NOTE:
Min. Sash Width 700mm / Max. Vent Width 1000mm
Max. Sash Weight 100kg
Max. Sash Height 2400mm Dependant On Site Conditions
Always Measure In the Last Vent.

ACCESSORIES

ACDV18	4	CLEAT FOR DV14
ACDV19	4	CLEAT FOR DV14
ACDV22	16	CLEAT FOR DV23
ACDV24	4	CHEVRON FOR DV14
ACDV225 or 226	1	SHOOTBOLT HANDLE
ACDV227	1	SHOOTBOLT GEARBOX
ACDV228	1 (PAIR)	SHOOTBOLT ROD
ACDV259	1 (PAIR)	SHOOTBOLT GUIDE
ACDV244	2 x (W-90) + 2 x (H-90)	FLIPPER GASKET
ACDV245	2 x (W-62)	SEALING GASKET
ACDV245	2 x (H-84)	SEALING GASKET
ACDV246	2 x (W/2-154.5)	SEALING GASKET
ACDV246	2 x (H-84)	SEALING GASKET
ACDV231	8	INTERMEDIATE HINGE
ACDV718/9	1	MULTI-POINT LOCK
ACDV251	1 (PAIR)	LEVER HANDLES
ACDV56	1 (PAIR)	END CAP FOR DV56
ACDV257	2 (SET OF 4)	INFILL BLOCK
ACVL032	2 x (H-84)	DV56 FLIPPER GASKET
ACDV258 (SL)	1	50/50 CYLINDER
ACET131	2	DRAIN HOLE COVER
ACET060	22	SCREW FOR DV56
ACET069	6	SCREW FOR DV23 & ACDV225/6
ACDR052	4	SCREW FOR DV25
ACDV241	22	FIXING BLOCK FOR LOCK & KEEPS
ACDV265	22	FIXING SCREW FOR LOCK & KEEPS
ACVG31	2 x (W-192) + 2 x (H-271)	EXTERNAL GLAZING GASKET
ACVG34	2 x (W-192) + 2 x (H-271)	INTERNAL GLAZING GASKET
ACMX01603 (SL)	1	HALF CYLINDER

Double Door

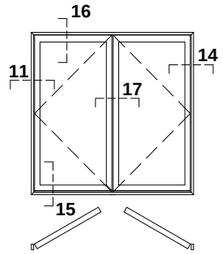

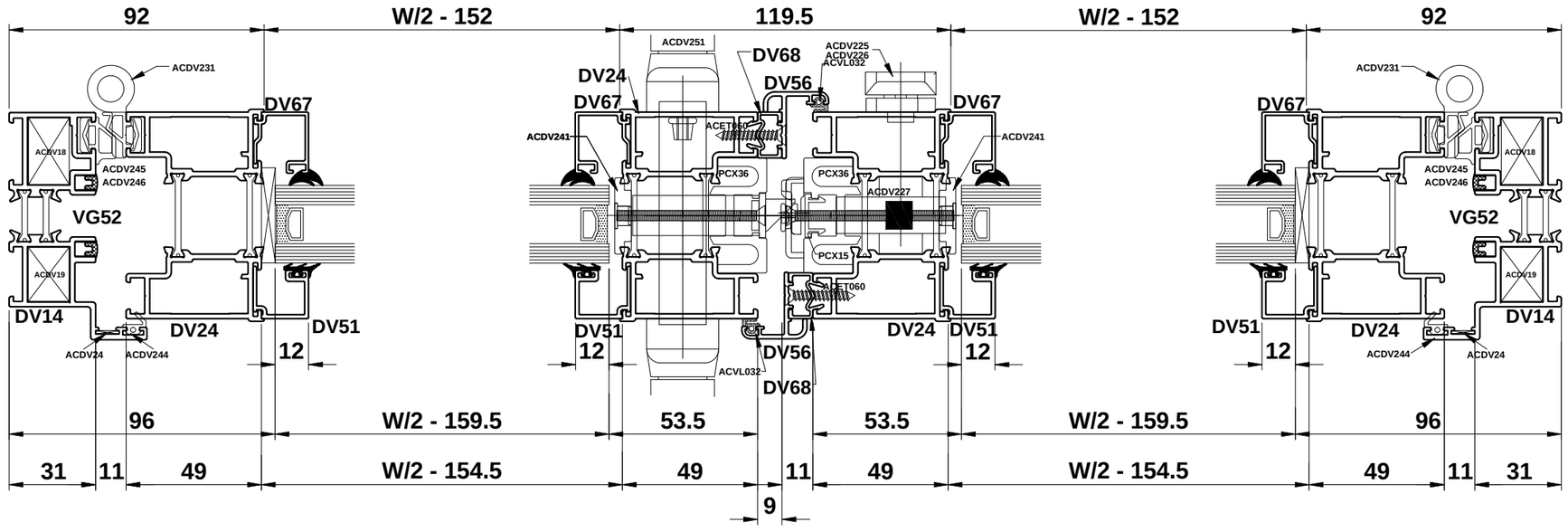

Do Not Scale From This Drawing

Double Door With DV23 & Low Threshold - Open In

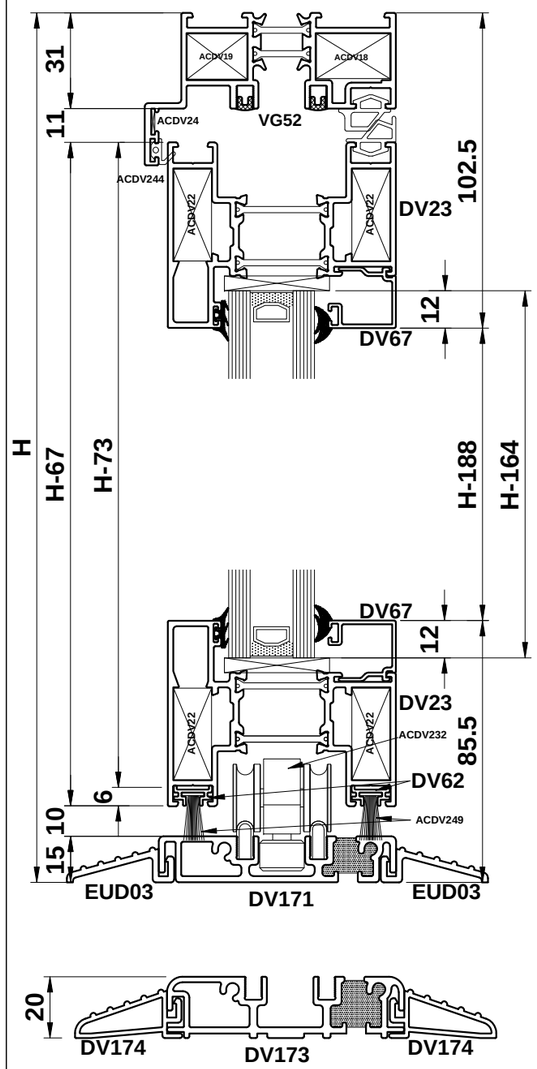

PROFILE CUTTING SCHEDULE (DV171)

DV14		1		W
DV14		2		H
DV171		1		W-66
EUD03		1		W-66
EUD03		1		W-99
DV23		2		W/2-154.5
DV24		4		H-73
DV25		2		W/2-154.5
DV51		4		H-278
DV56		2		H-73
DV63 or DV67	or	4		W/2-152
DV63 or DV67	or	4		H-244 H-278
DV62		2		W/2-101
VG52		4		W-62
VG52		4		H-42
PCX36		2		H-73
DV68		2		H-73
PCX15		1		H-73

Note: PCX15 required for master door if leaf height

IMPORTANT NOTE:
Min. Sash Width 700mm / Max. Vent Width 1000mm
Max. Sash Weight 100kg
Max. Sash Height 2400mm Dependant On Site Conditions
Always Measure In the Last Vent.

PROFILE CUTTING SCHEDULE (DV173)

DV173		1		W-66
DV174		1		W-66
DV174		1		W-99
DV24		4		H-78
DV51		4		H-283
DV56		2		H-78
DV63 or DV67	or	4		H-249 H-283
PCX36		2		H-78
DV68		2		H-78
PCX15		1		H-78

DV171	2 x	W - 159.5	H - 164
DV173	2 x	W - 159.5	H - 164

Double Door

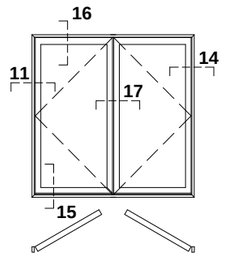

ACCESSORIES

ACDV18	4	CLEAT FOR DV14
ACDV19	4	CLEAT FOR DV14
ACDV22	16	CLEAT FOR DV23
ACDV24	4	CHEVRON FOR DV14
ACDV225 or 226	1	SHOOTBOLT HANDLE
ACDV227	1	SHOOTBOLT GEARBOX
ACDV228	1 (PAIR)	SHOOTBOLT ROD
ACDV259	1 (PAIR)	SHOOTBOLT GUIDE
ACDV244	1 x (W-90) + 2 x (H-90)	FLIPPER GASKET
ACDV245	1 x (W-62)	SEALING GASKET
ACDV245	2 x (H-84)	SEALING GASKET
ACDV246	1 x (W/2-154.5)	SEALING GASKET
ACDV246	2 x (H-84)	SEALING GASKET
ACDV249	1 x (W/2-154.5)	WOOLPILE
ACDV231	8	INTERMEDIATE HINGE
ACDV718/9	1	MULTI-POINT LOCK
ACDV251	1 (PAIR)	LEVER HANDLES
ACDV56	1 (PAIR)	END CAP FOR DV56
ACDV257	1 (SET OF 4)	INFILL BLOCK
ACVL032	2 x (H-84)	DV56 FLIPPER GASKET
ACDV258 (SL)	1	50/50 CYLINDER
ACET131	2	DRAIN HOLE COVER
ACET060	22	SCREW FOR DV56
ACET069	6	SCREW FOR DV23 & ACDV225/6
ACDR052	4	SCREW FOR DV25 & DV171/3
ACDV241	22	FIXING BLOCK FOR LOCK & KEEPS
ACDV265	22	FIXING SCREW FOR LOCK & KEEPS
ACVG31	2 x (W-192) + 2 x (H-271)	EXTERNAL GLAZING GASKET
ACVG34	2 x (W-192) + 2 x (H-271)	INTERNAL GLAZING GASKET
ACMX01603 (SL)	1	HALF CYLINDER
ACDV261	1 (SET OF 4)	INFILL BLOCK
ACDV171/3	1 (PAIR)	END CAPS FOR DV171/173

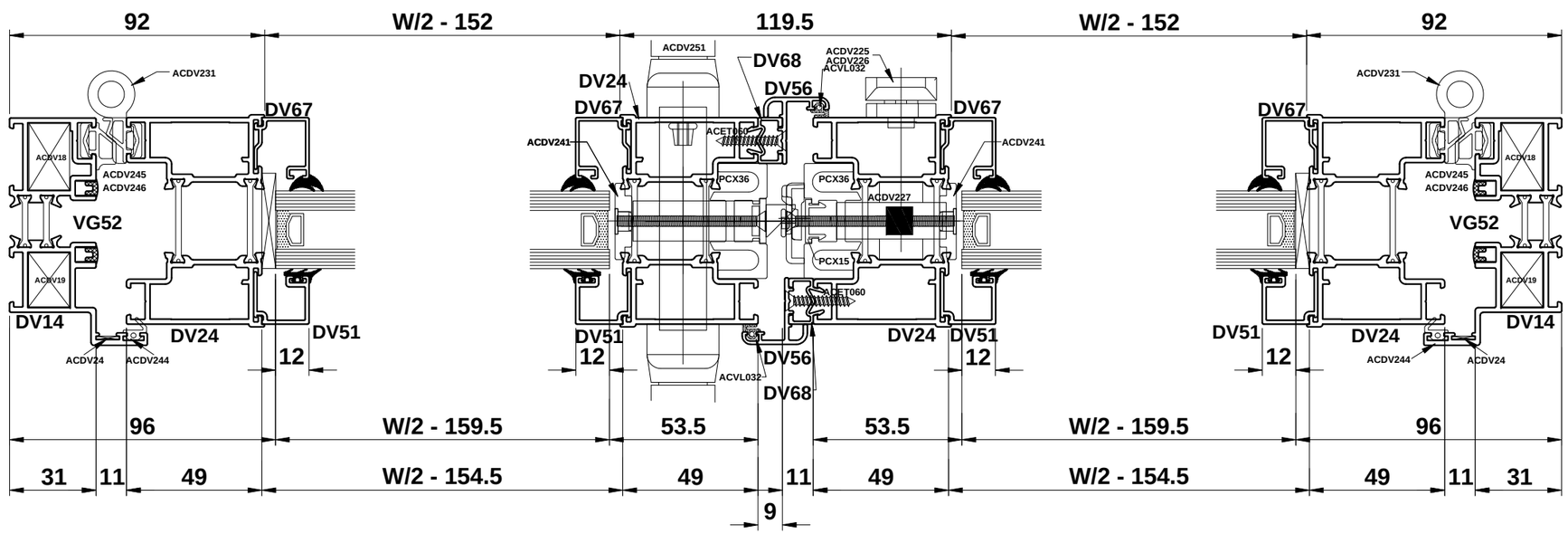

Do Not Scale From This Drawing

Bulletin

DV30 = New transom for Visofold 1000 & Visofold 2000

Number	Perim. mm	Mec. mm	Ix(cm4) wx(cm3)	Iy(cm4) wy(cm3)	Length	Pack pr.	MF	SA	KL	HP	M
DV30	324	99	28.27 ----- 6.19	6.71 ----- 2.73	6.5	1	X	X	X	X	X

DV33 = New transom for Visofold 3000

Number	Perim. mm	Mec. mm	Ix(cm4) wx(cm3)	Iy(cm4) wy(cm3)	Length	Pack pr.	MF	SA	KL	HP	M
DV33	426	129	22.49 ----- 6.58	15.8 ----- 4.1	6.5	1	X	X	X	X	X

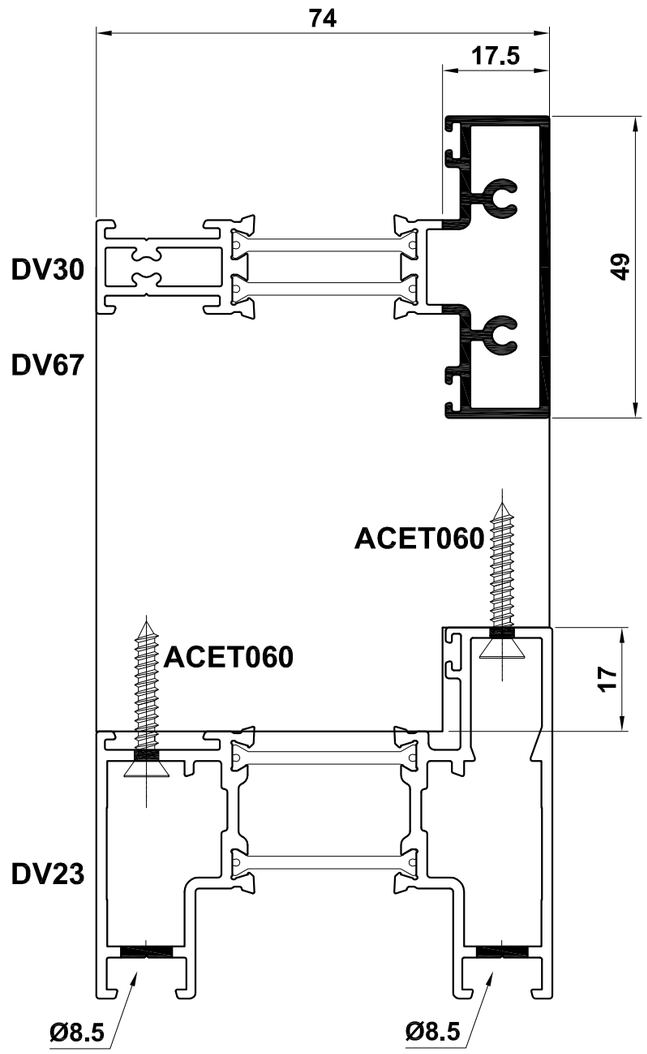

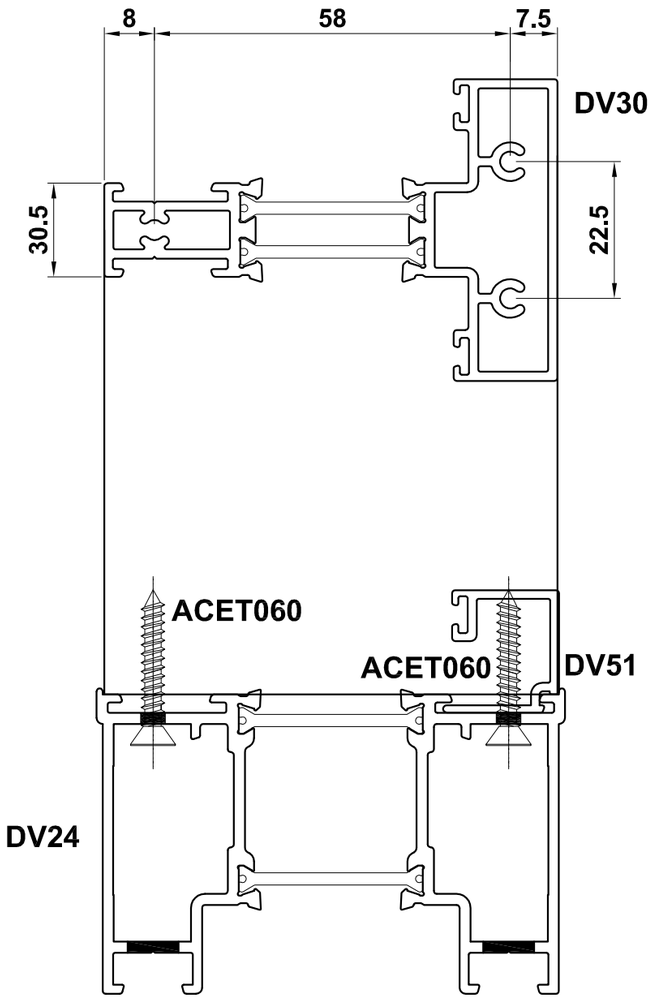

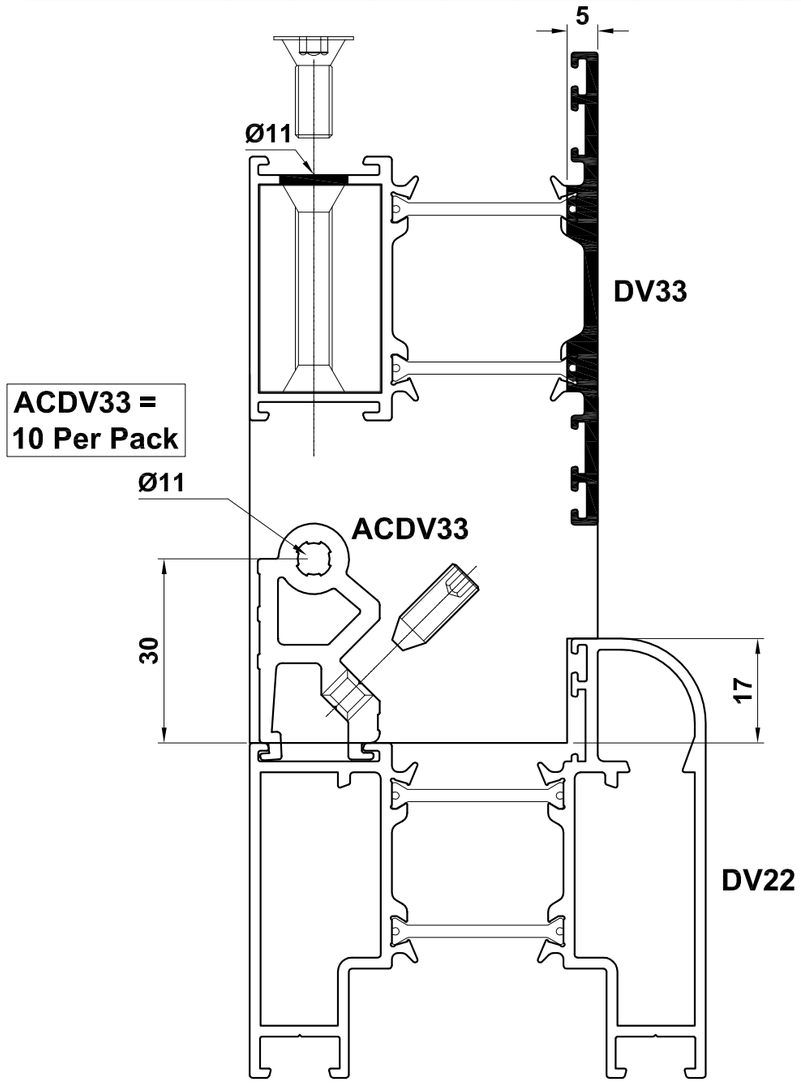

Do Not Scale From This Drawing

Bulletin **Open In & Out**

DV32 Preparation for Standard & Low Threshold

Head

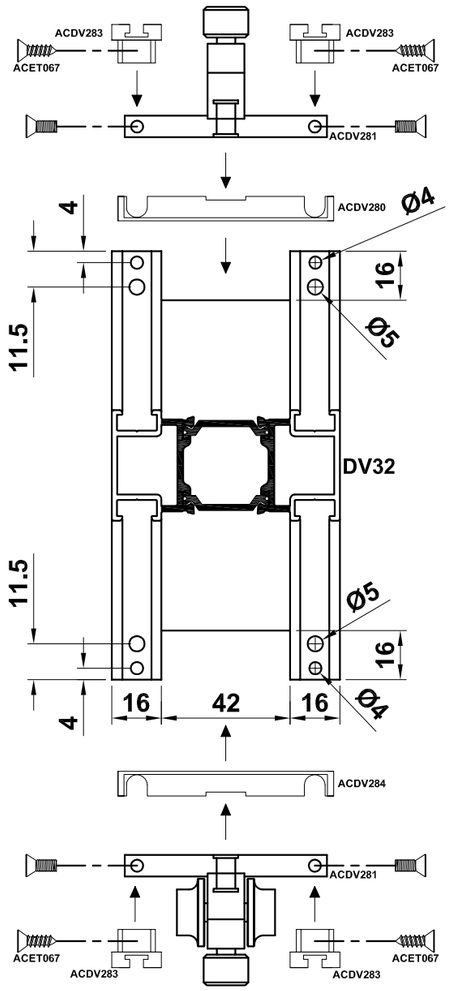

Cill

New roller, top guide and accessories to replace ACDV232, ACDV233, ACDV242 & ACDV255 where DV32 is required.

Two additional ACDV231 intermediate hinges are required per mullion.

NOTE:
Where DV32 is used, ACSR012A should replace ACDV244 in outerframe

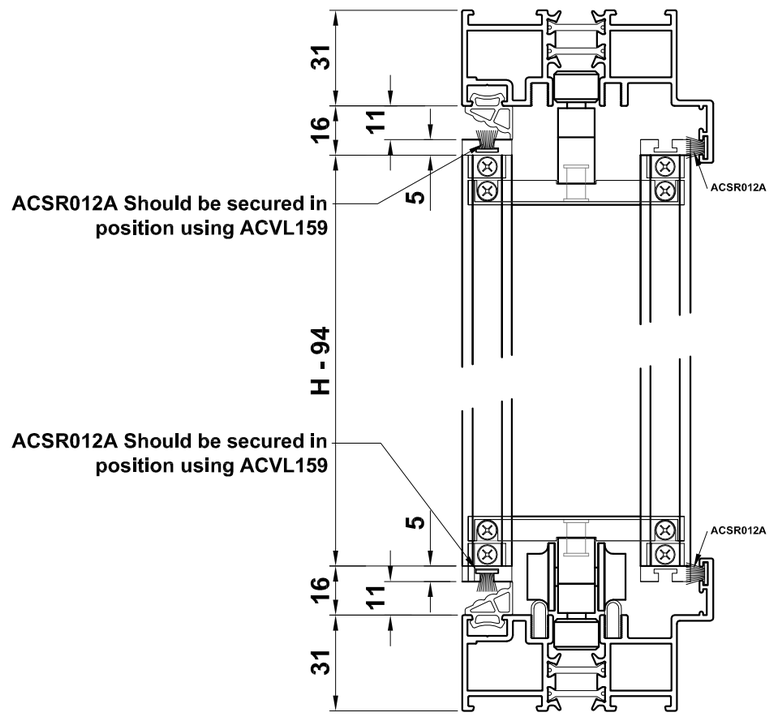

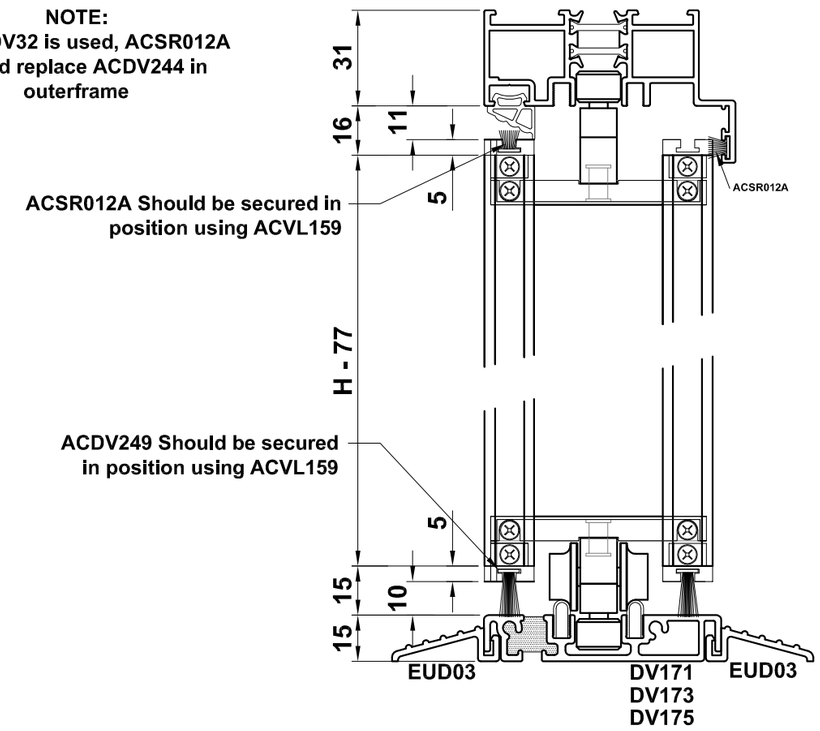

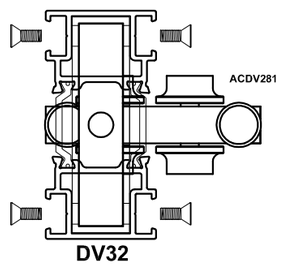

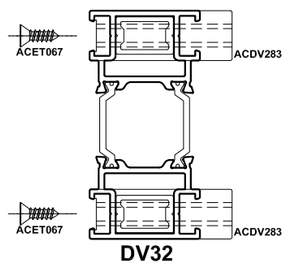

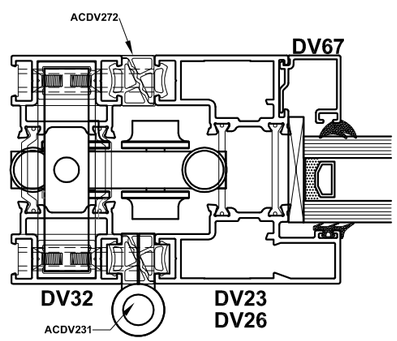

Do Not Scale From This Drawing

smart architectural aluminium

Visofold 2000

Image	Part Code	Pack	Unit	Drawing 1 of 4
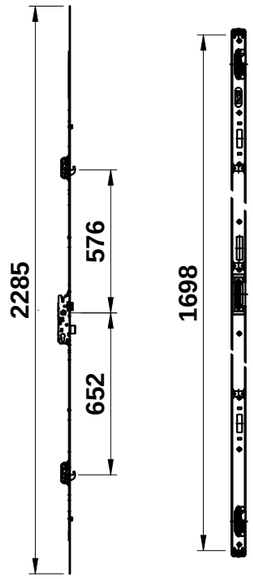	**ACDV722** Multi Point Lock Kit with LEFT HAND Full Height Keep Viewed Externally Left Hand Open Out Right Hand Open In	1	each	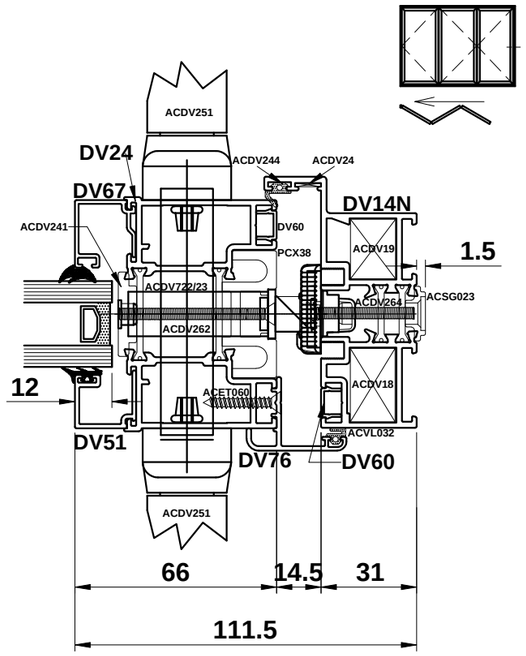 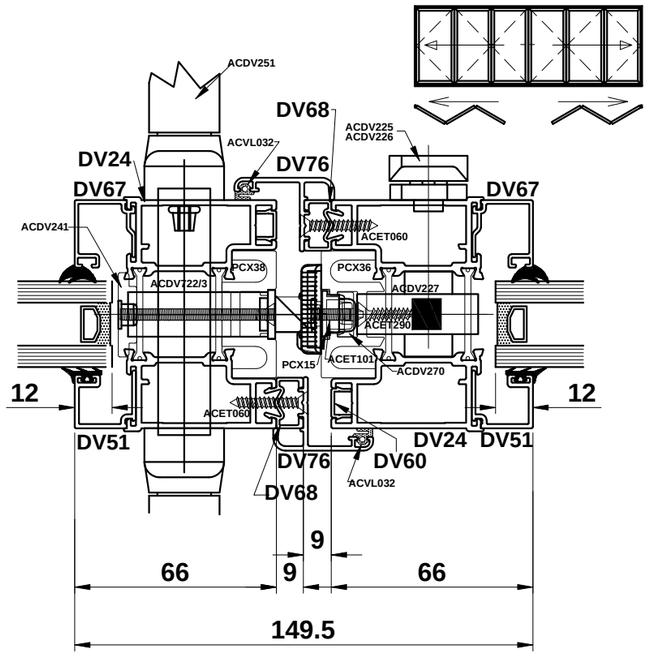
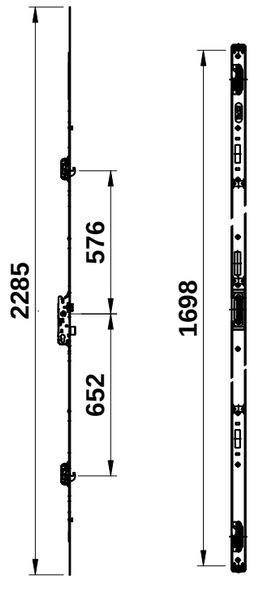	**ACDV723** Multi Point Lock Kit with RIGHT HAND Full Height Keep Viewed Externally Left Hand Open In Right Hand Open Out	1	each	New versions of ACDV718 & ACDV719 with a full height which can be used in Visofold 2000. 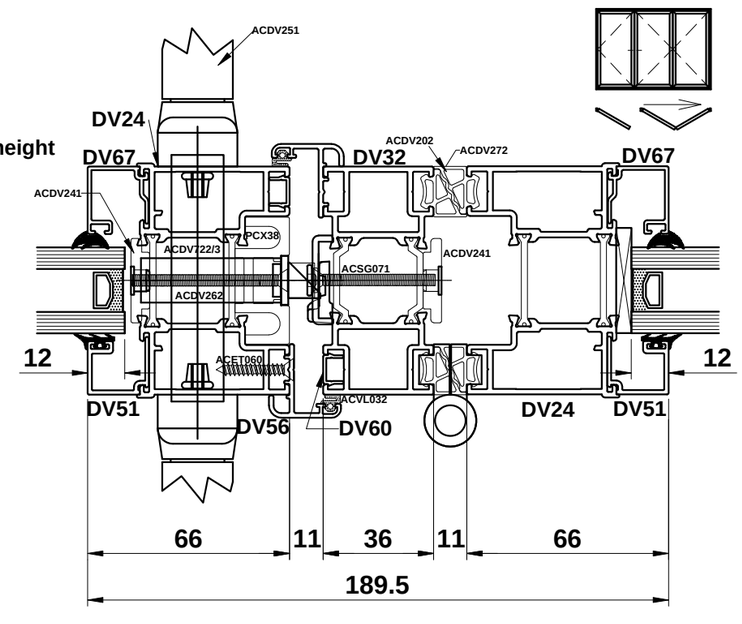

Do Not Scale From This Drawing

ACDV722/723 Preparation - Locking into DV24 with ACDV251 Handle

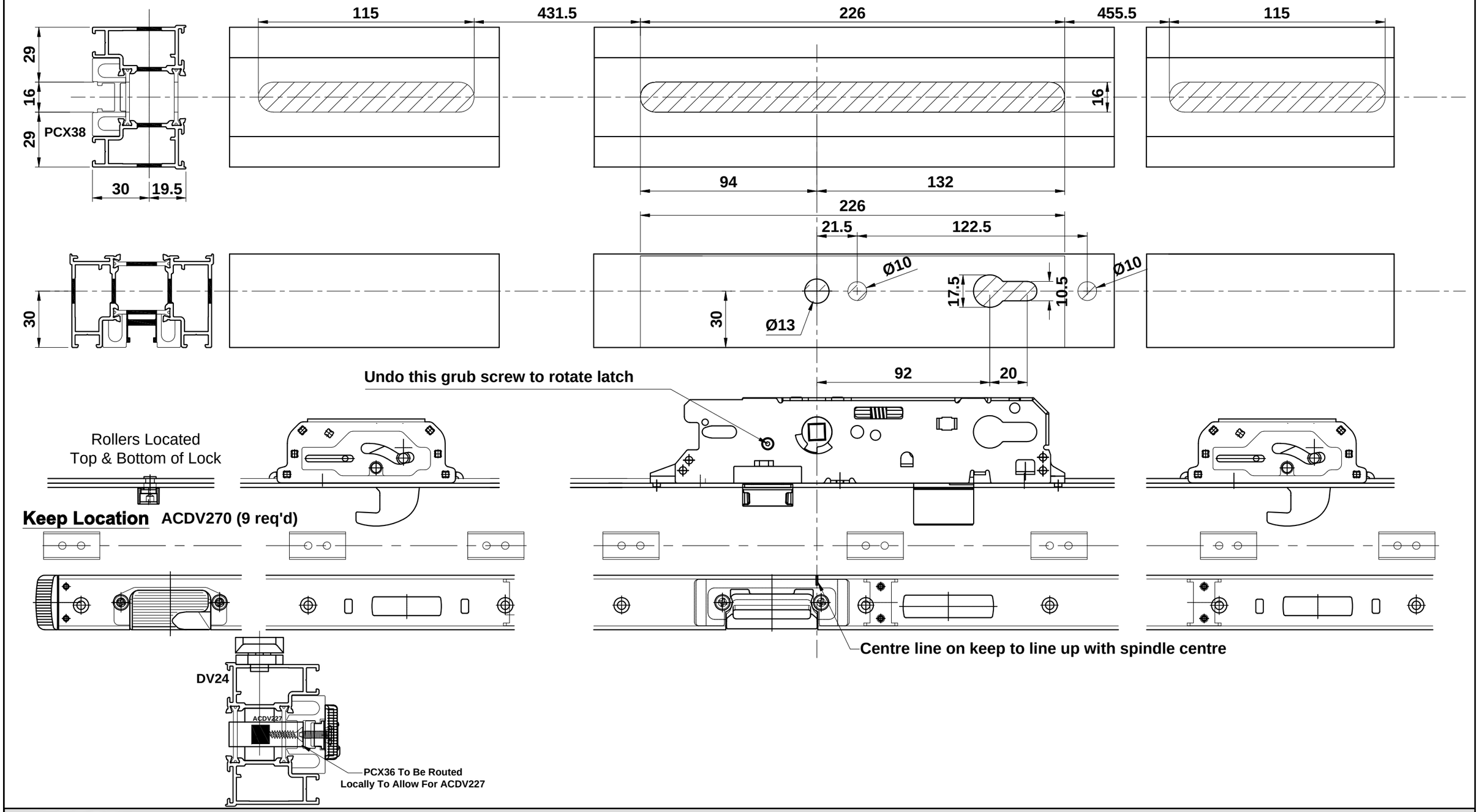

Do Not Scale From This Drawing

ACDV722/723 Preparation - Locking into DV14N with ACDV251 Handle

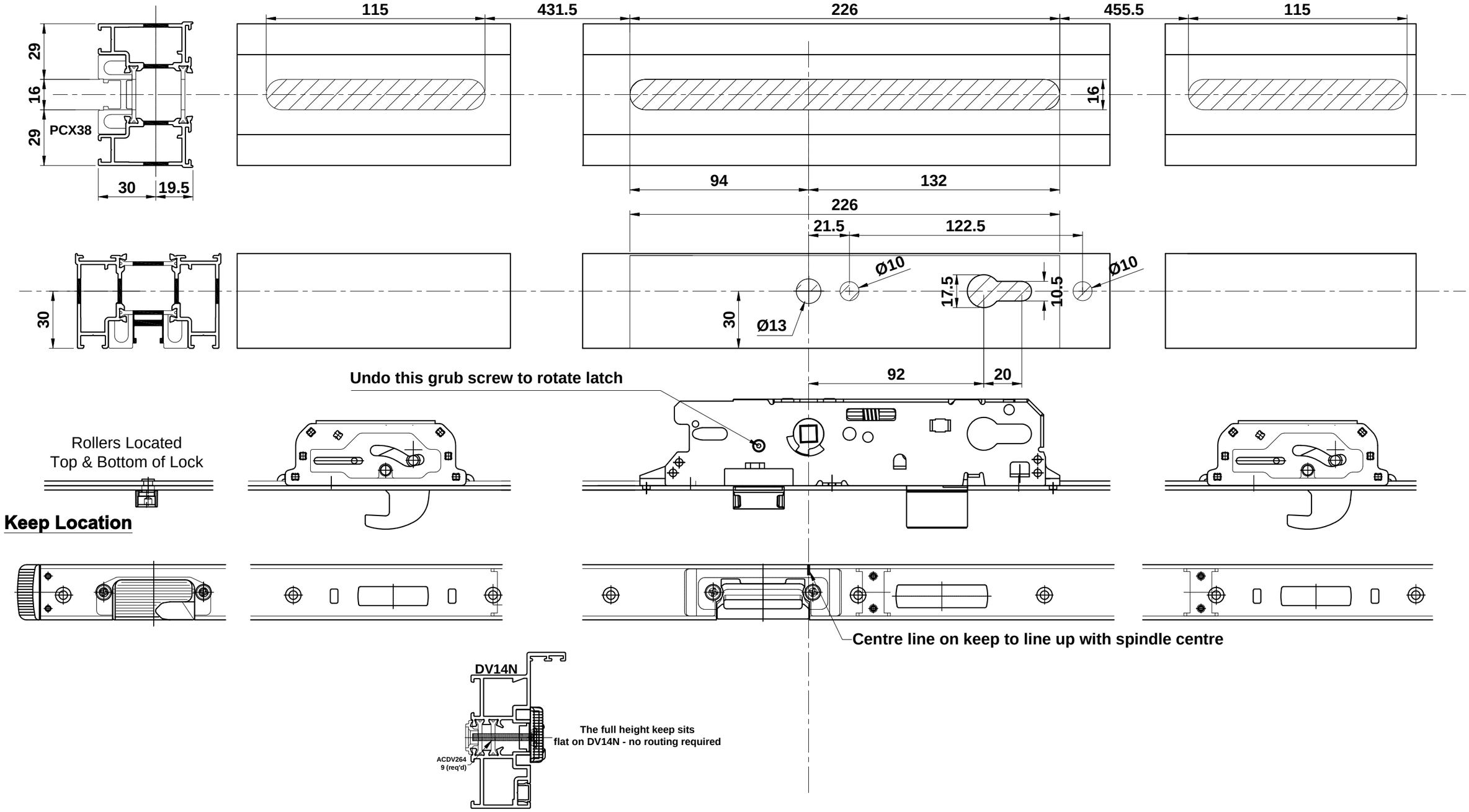

Do Not Scale From This Drawing

ACDV722/723 Preparation - Locking into DV32 with ACDV251 Handle

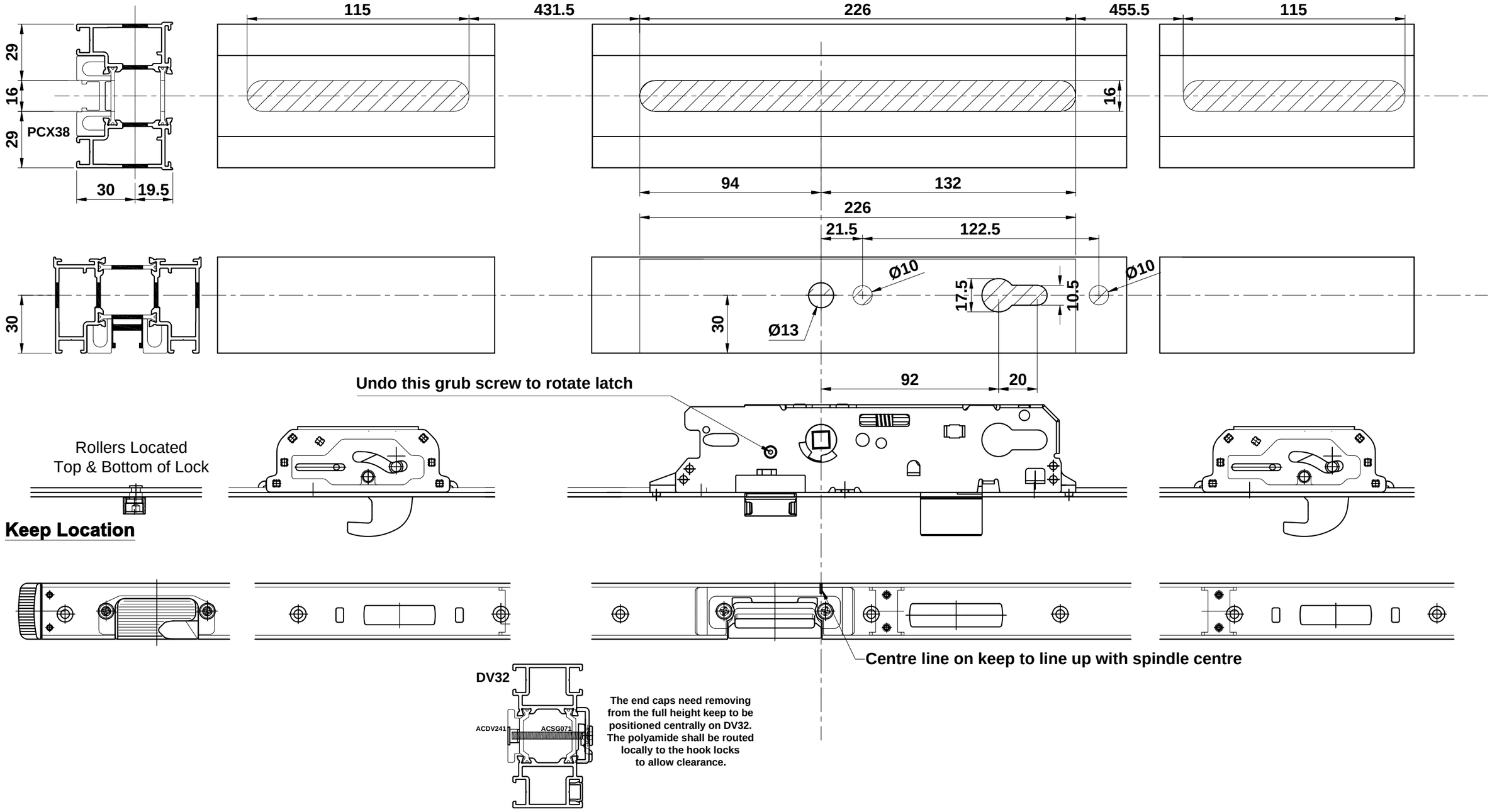

Do Not Scale From This Drawing

New Gasket ACDV272 & Corner Moulds ACDV275

Image	Part Code	Pack	Unit	Application	Colour	
	ACDV272 Sealing Gasket	100	m	DV11 DV14N DV22 DV23 DV24 DV26 DV27	MF SA KL HP M GOZ W Z PC	 X
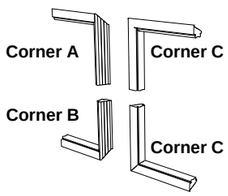	ACDV275 Corner Gaskets to Join ACDV272 Around Sash Typically 1 Set = 1 Sash	10	sets	DV22 DV23 DV24 DV26 DV27	MF SA KL HP M GOZ W Z PC	 X

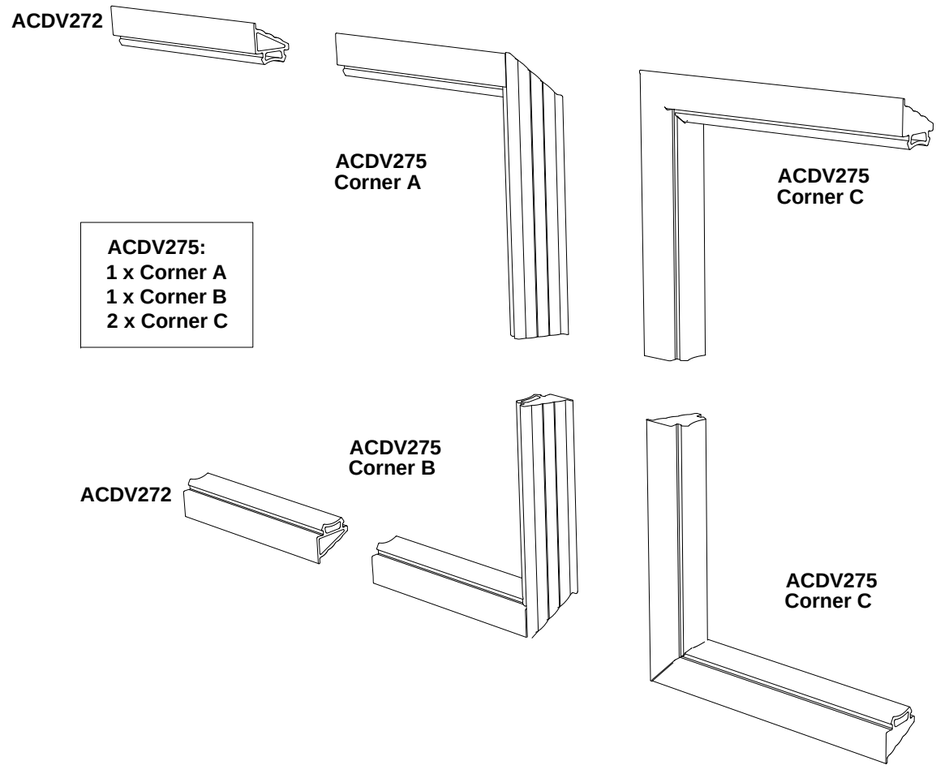

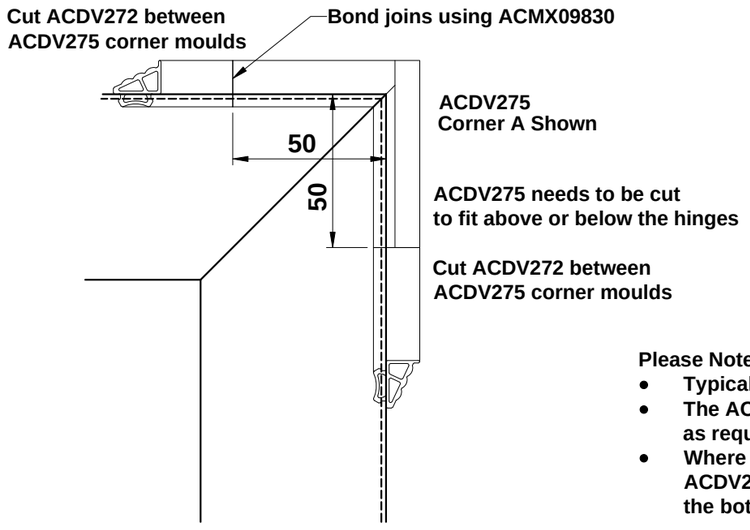

Please Note:

- Typically: one set = one sash
- The ACDV275's can be rotated as required
- Where low thresholds are used, ACDV275's are not required at the bottom of door leafs.

Typical Arrangement of ACDV275's

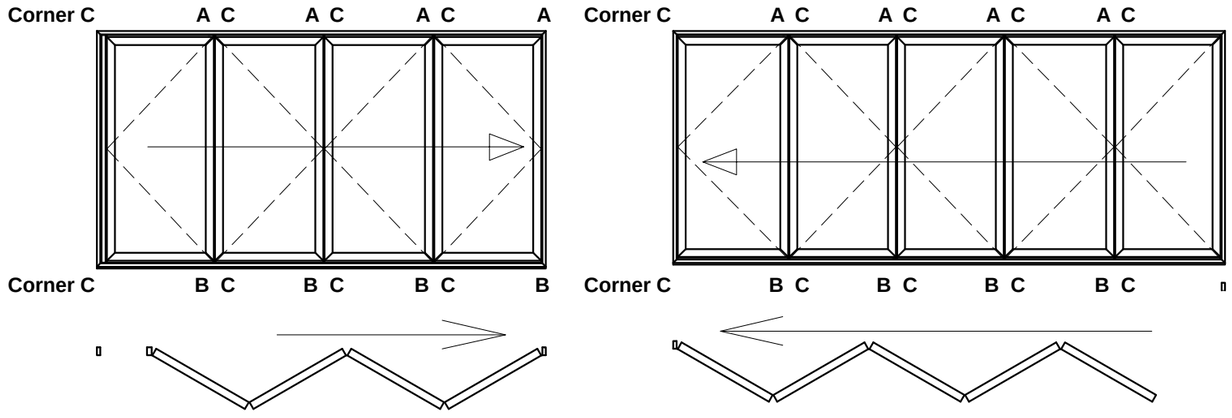

Do Not Scale From This Drawing

Recent System Updates

New Sections

Number	Picture	Page	Perim. mm	Mec. mm	Ix(cm4) wx(cm3)	Iy(cm4) wy(cm3)	Length	Pack pr.	MF	SA	KL	HP	M
DV14N	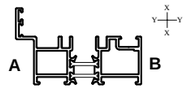 Open In Shown Reverse For Open Out	A10	458.7	99.2	37.0 ----- 8.9	7.8 ----- 4.3	6.5	1	X	X	X	X	X
DV175	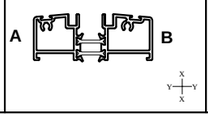	A14	380.3	136.2	- ----- -	- ----- -	6.5	1	X	X	X	X	X

DV14 will be replaced with DV14N.
All dimensions & accessories will remain the same.

DV14

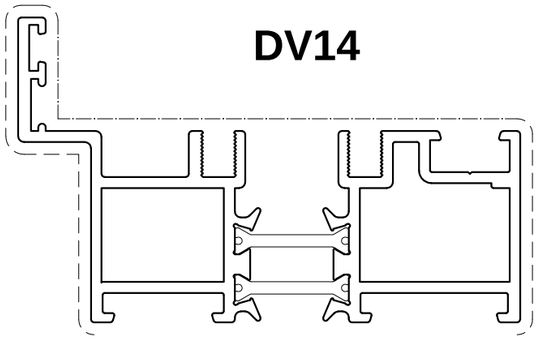

DV14N

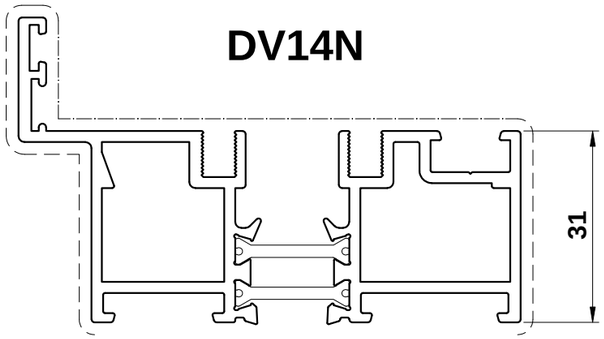

DV175 is now available as a low threshold option

ACVS010 **DV175** **ACVS010**

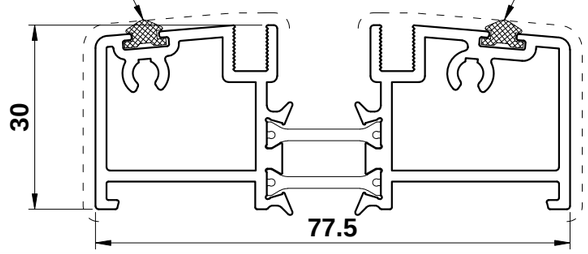

End cap for sealing against DV11 = ACDV176

End cap for sealing against DV14 = ACDV175

New Accessories

Image	Part Code	Pack	Unit	Application	Colour
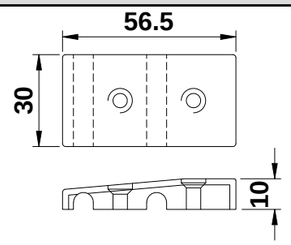	**ACDV080** **Run Up Block** **For use with DV14/DV14N**	**50**	**pack**	**DV14N DV23 DV26**	MF SA KL HP M GOZ W **X** Z **X** PC
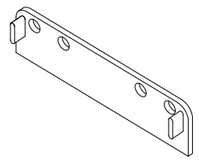	**ACDV175** **Threshold End Cap** **For use with DV14/DV14N**	**10**	**pack**	**DV14N DV175**	MF SA KL HP M GOZ W Z **X** PC
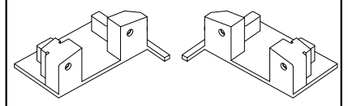	**ACDV176** **Threshold End Cap** **For use with DV11**	**10**	**pack**	**DV11 DV175**	MF SA KL HP M GOZ W Z **X** PC

Do Not Scale From This Drawing

Bulletin

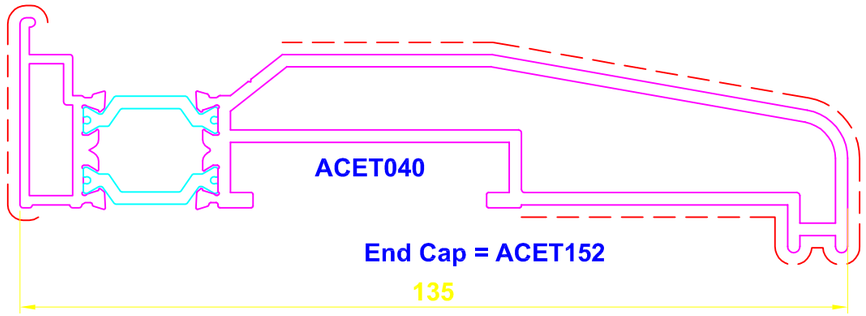

ETC152 - New 135mm Cill

Number	Perim. mm	Mec. mm	Ix(cm4) wx(cm3)	Iy(cm4) wy(cm3)	Length	Pack pr.	MF	SA	KL	HP	M
ETC152	672	214	- ----- -	- ----- -	6.5	1	X	X	X	X	X

Suitable for use on window and door profiles up to 74.5mm wide. Anything deeper will need to have the legs packed out.

Suitable For
Alitherm Series
Visofold Series
Eco Futural
Visoline
Evolution

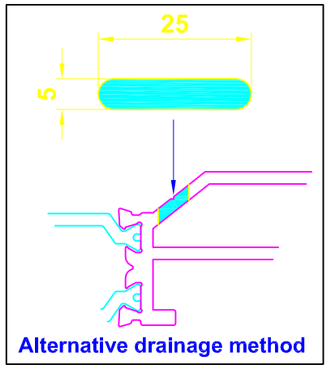

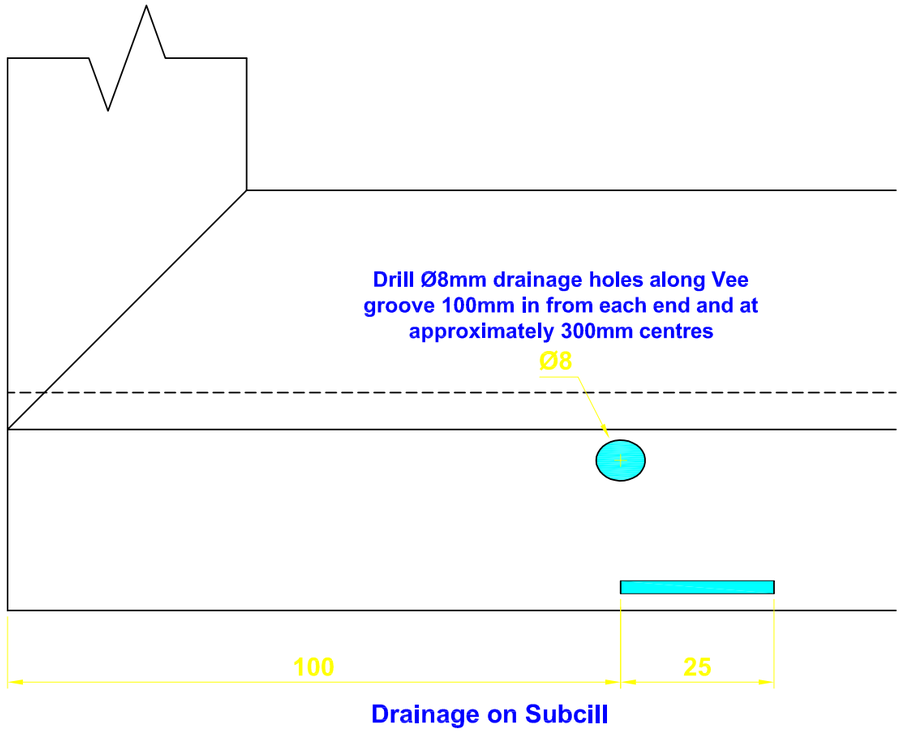

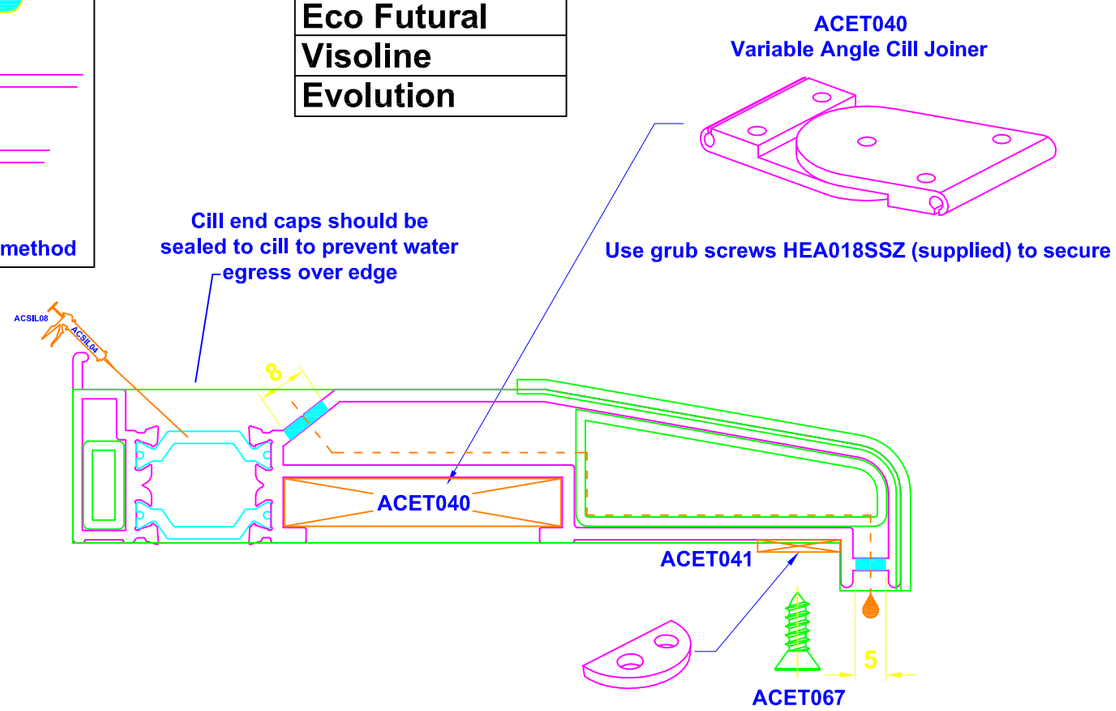

Do Not Scale From This Drawing

Bulletin

New section DV75 with new lock, shoot bolts and keeps allow primary & secondary doors to be operated by ACDV251 handles, thus providing symmetry.

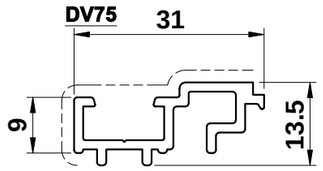

Number	Perim. mm	Mec. mm	Ix(cm4) wx(cm3)	Iy(cm4) wy(cm3)	Length	Pack pr.	MF	SA	KL	HP	M
DV75	143	32	- ----- -	- ----- -	6.5	1	X	X	X	X	

ACDV722 & ACDV727
Viewed Externally

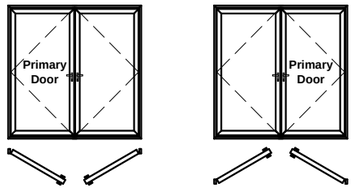

ACDV723 & ACDV727
Viewed Externally

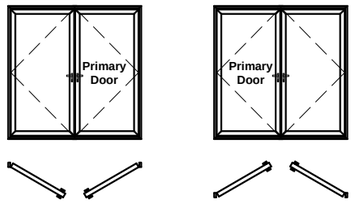

DV75 is also suitable for the below

Type 4e
Type 4i

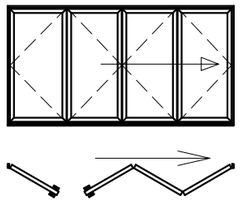

Type 7e
Type 7i

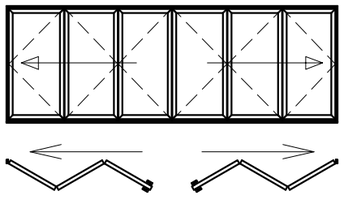

Image	Part Code	Pack	Unit
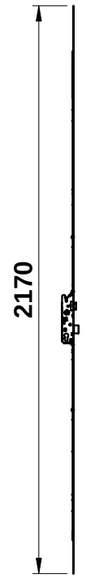	**ACDV727** Lock for secondary leaf (non-handed)	1	each
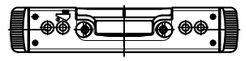	**ACDV733** Top & Bottom Keep	1	each
	**ACDV737** Bottom Shoot Bolt	1	each
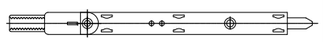	**ACDV738** Top Shoot Bolt	1	each
Image Unavailable	**ACDV742** 200mm Shoot Bolt Extension	1	each
Image Unavailable	**ACDV744** 400mm Shoot Bolt Extension	1	each

Do Not Scale From This Drawing

Bulletin

General Assembly

Drawing 2 of 5

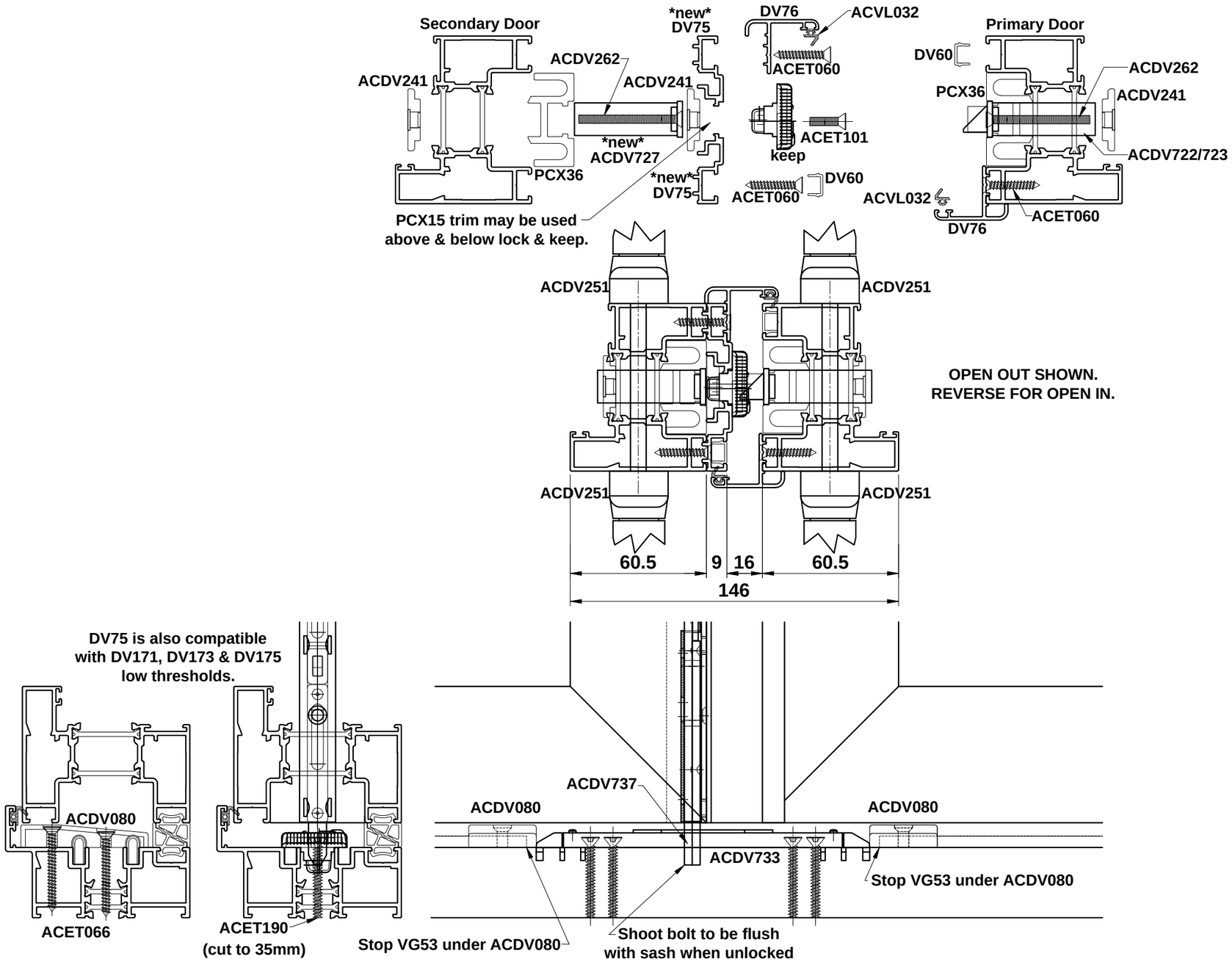

Do Not Scale From This Drawing

Bulletin

ACDV727 Preparation with ACDV251 Handle

Drawing 3 of 5

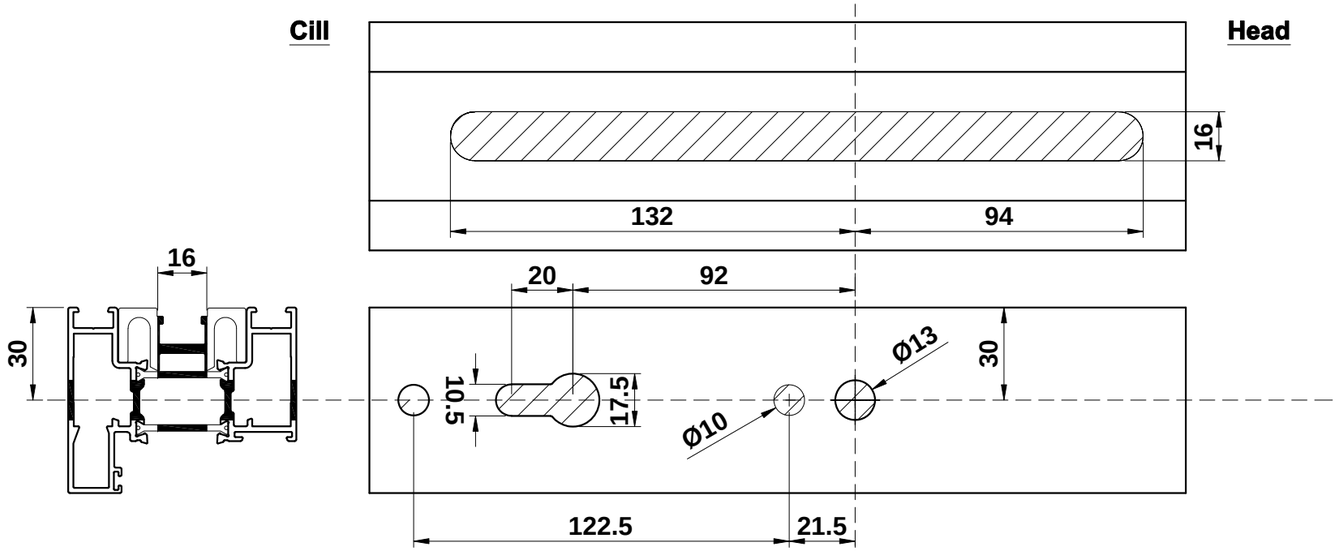

Note:
Use Manual For Primary Door Lock Preparation Details

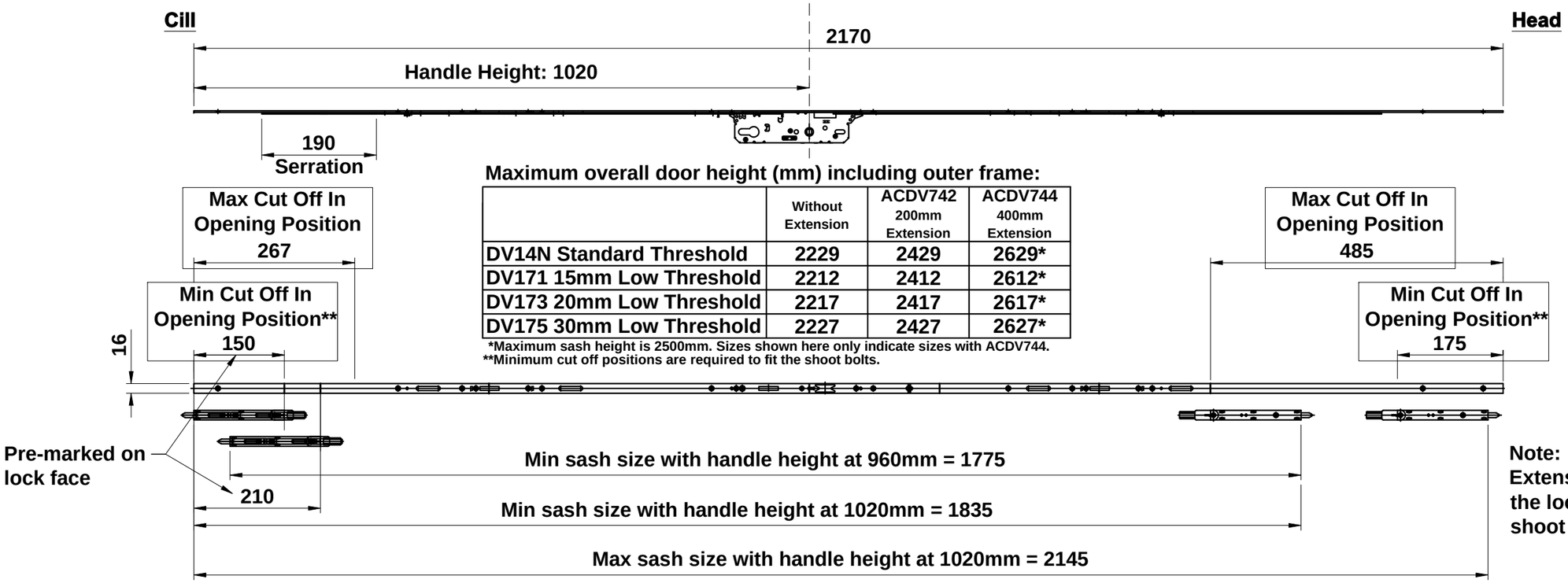

Maximum overall door height (mm) including outer frame:

	Without Extension	ACDV742 200mm Extension	ACDV744 400mm Extension
DV14N Standard Threshold	2229	2429	2629*
DV171 15mm Low Threshold	2212	2412	2612*
DV173 20mm Low Threshold	2217	2417	2617*
DV175 30mm Low Threshold	2227	2427	2627*

*Maximum sash height is 2500mm. Sizes shown here only indicate sizes with ACDV744.
**Minimum cut off positions are required to fit the shoot bolts.

Note:
Extensions are fitted between the lock and ACDV738 shoot bolt.

Do Not Scale From This Drawing

Bulletin

General Assembly

Drawing 4 of 5

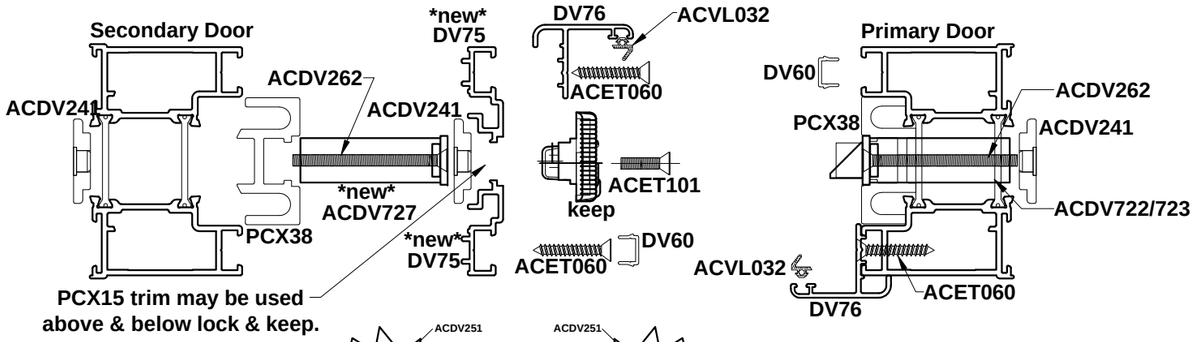

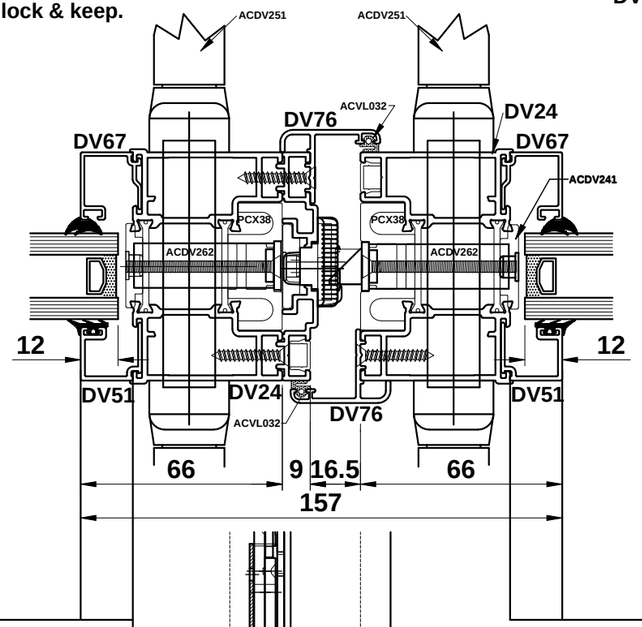

OPEN OUT SHOWN.
REVERSE FOR OPEN IN.

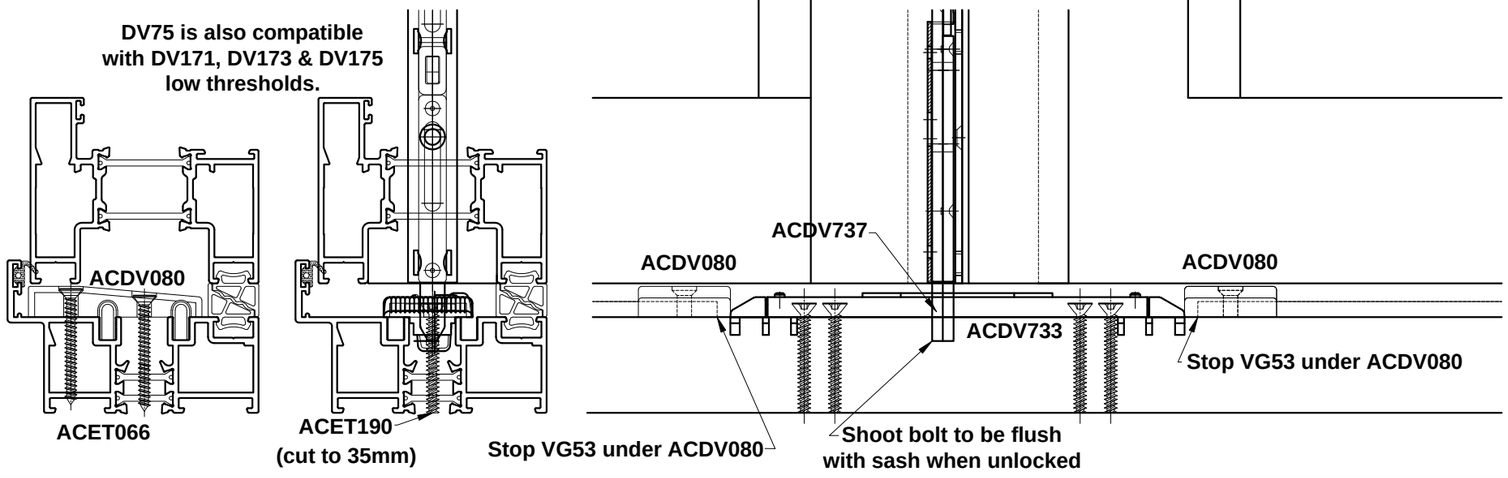

Do Not Scale From This Drawing

Bulletin

ACDV727 Preparation with ACDV251 Handle

Drawing 5 of 5

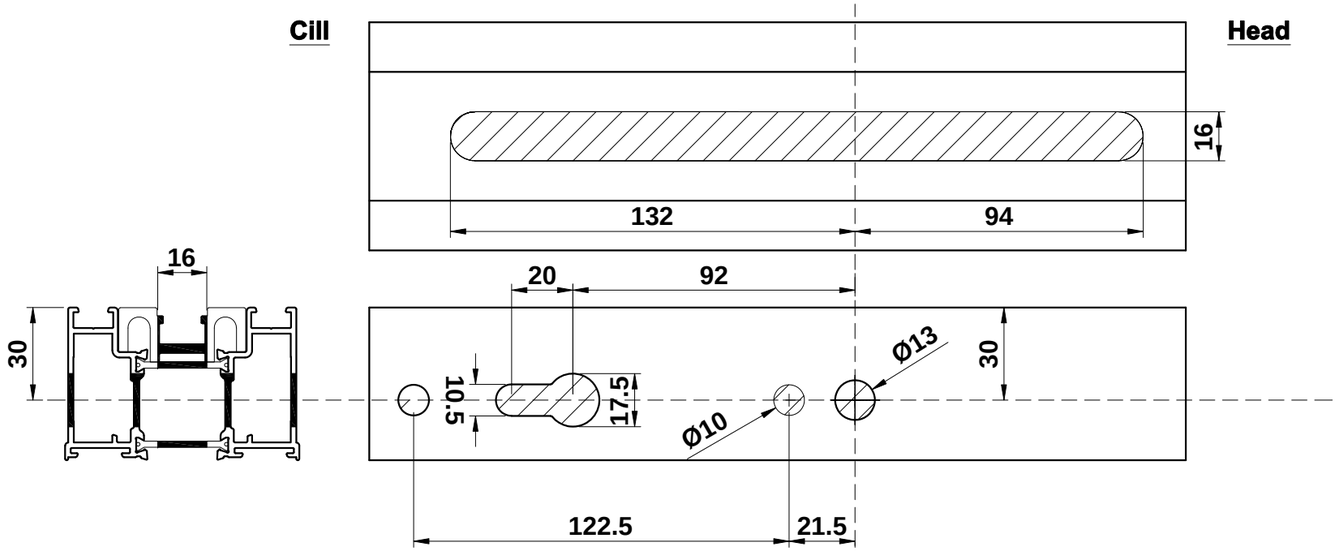

Note:
Use Manual For Primary Door Lock Preparation Details

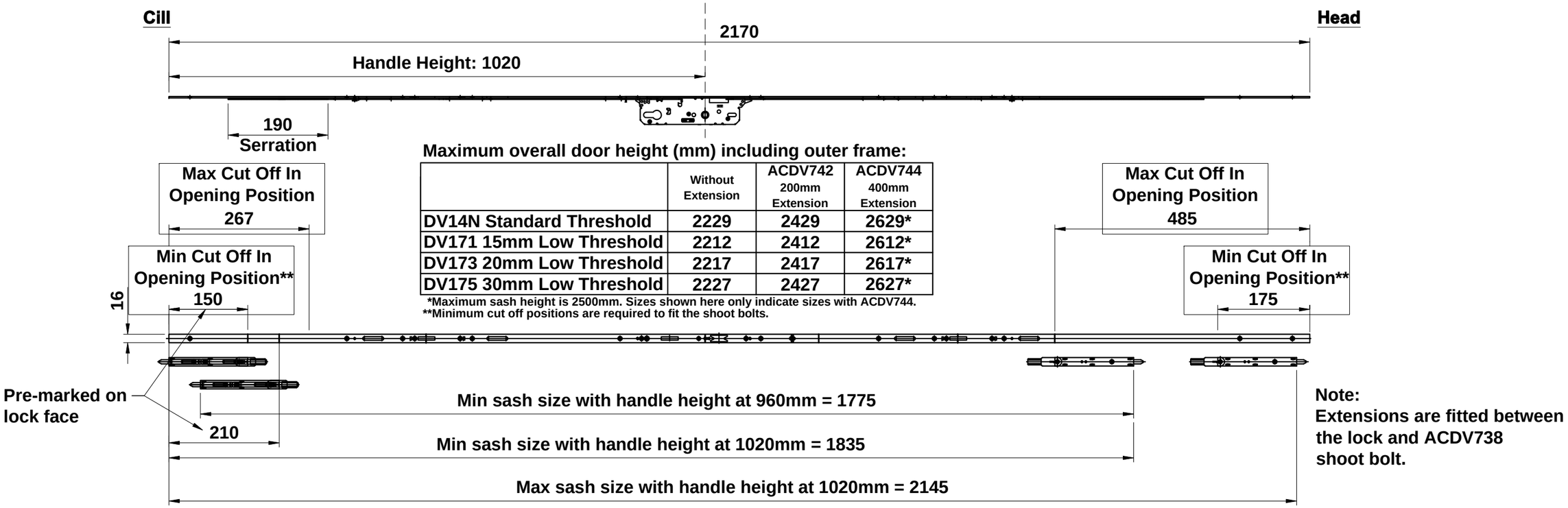

Maximum overall door height (mm) including outer frame:

	Without Extension	ACDV742 200mm Extension	ACDV744 400mm Extension
DV14N Standard Threshold	2229	2429	2629*
DV171 15mm Low Threshold	2212	2412	2612*
DV173 20mm Low Threshold	2217	2417	2617*
DV175 30mm Low Threshold	2227	2427	2627*

*Maximum sash height is 2500mm. Sizes shown here only indicate sizes with ACDV744.
**Minimum cut off positions are required to fit the shoot bolts.

Note:
Extensions are fitted between the lock and ACDV738 shoot bolt.

Do Not Scale From This Drawing

Bulletin

	Number	Perim. mm	Mec. mm	Ix(cm4) wx(cm3)	Iy(cm4) wy(cm3)	Length	Pack pr.	MF	SA	KL	HP	M
New	DV555	544	150	46.95 ----- 12.23	56.06 ----- 14.46	6.5	1	✓	✓	✓	✓	✓

DV555

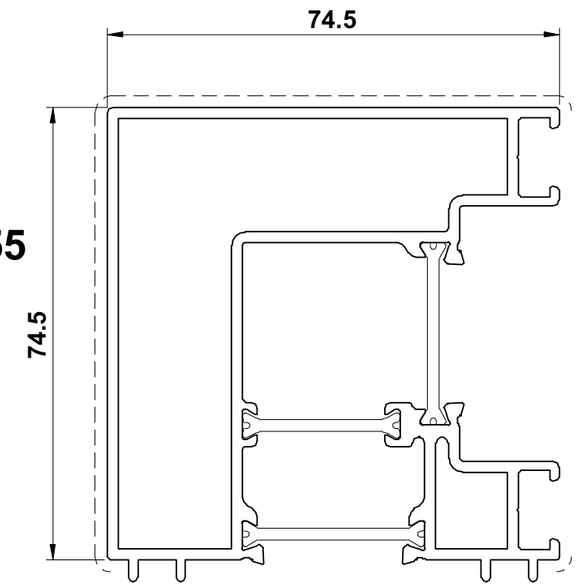

	Image	Part Code	Pack	Unit
New	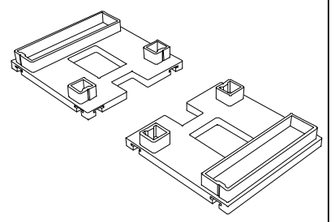	**ACDV555** End Cap for DV555 (Top & Bottom) Black or White	10	pairs
New	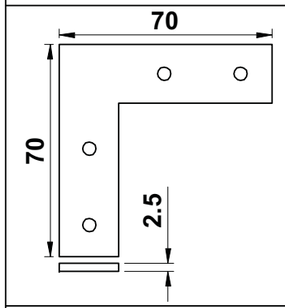	**ACDV552** Outer Frame Fixing Bracket	4	pack
New	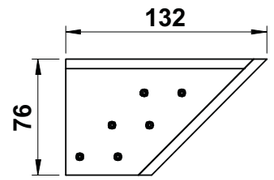	**ACDV950** Marking Jig	1	each

Bulletin

Example

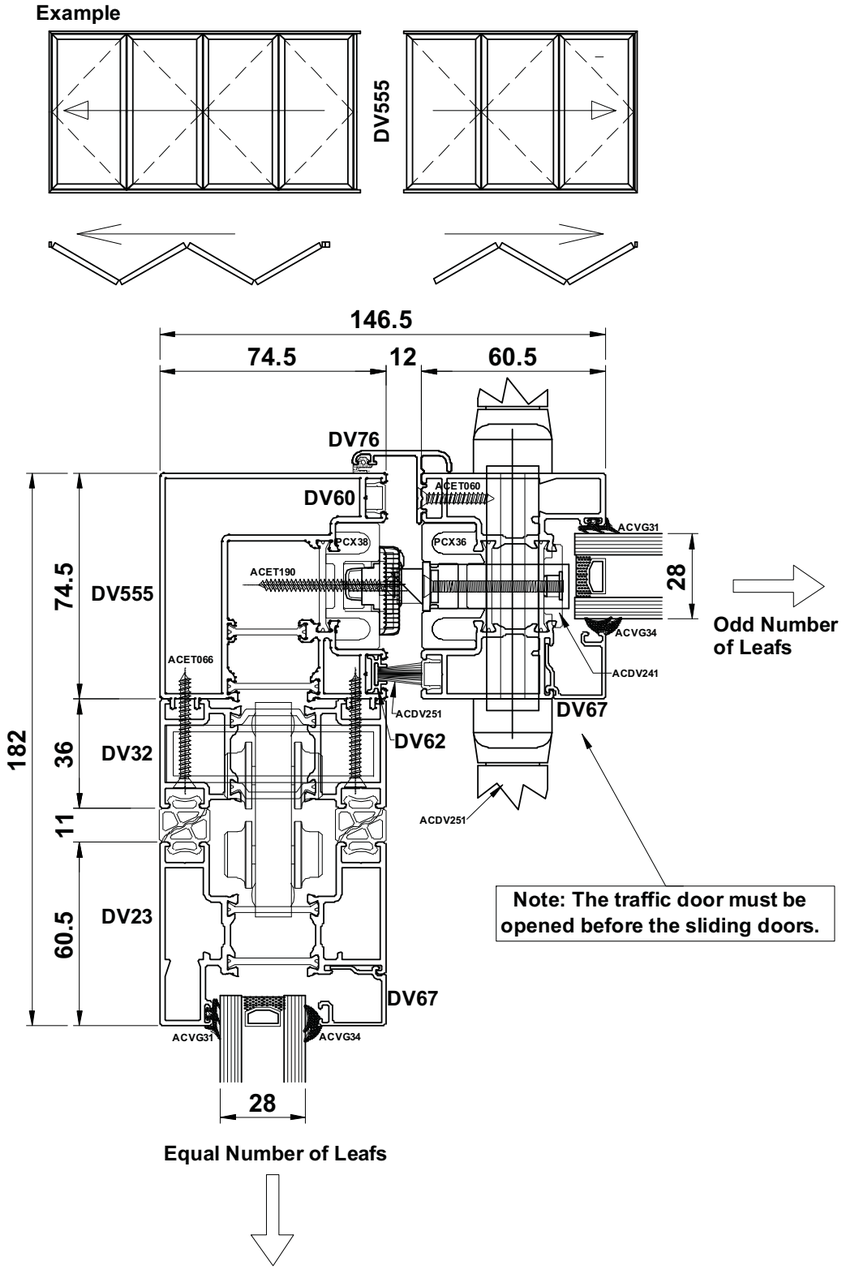

Example

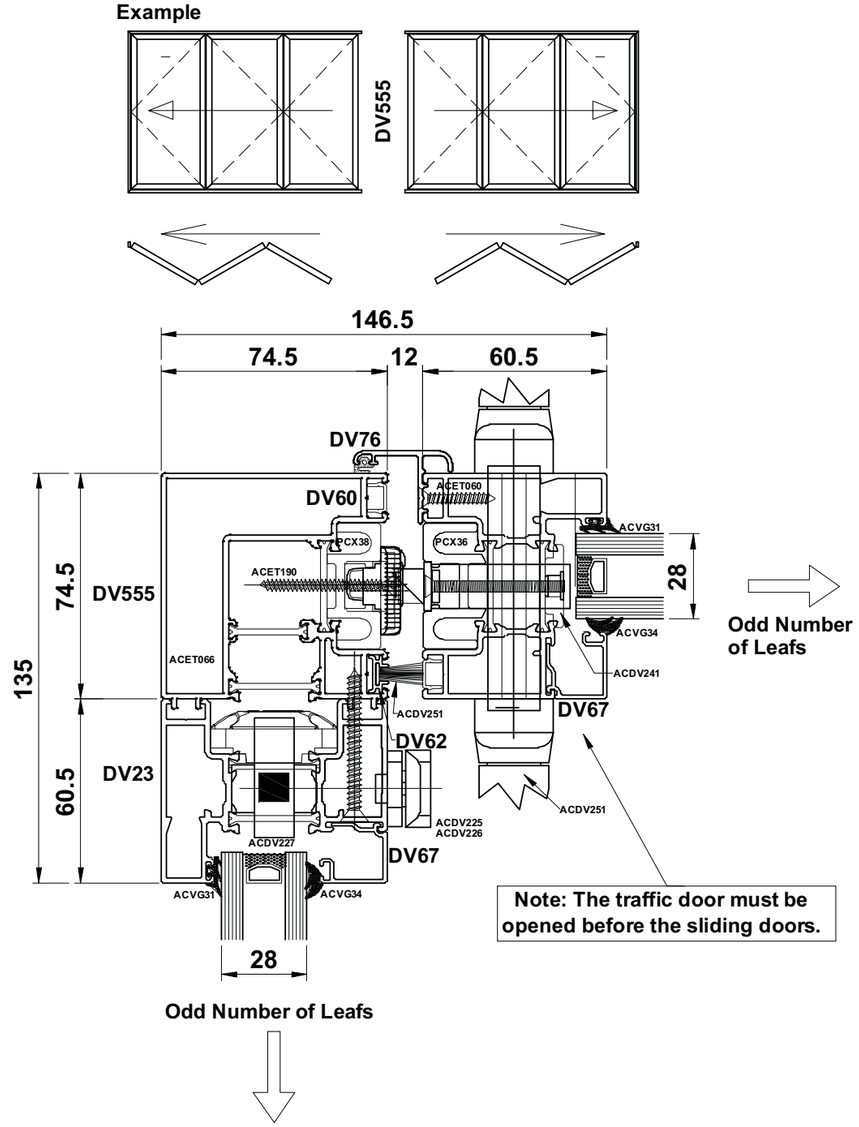

Do Not Scale From This Drawing

Bulletin

Example

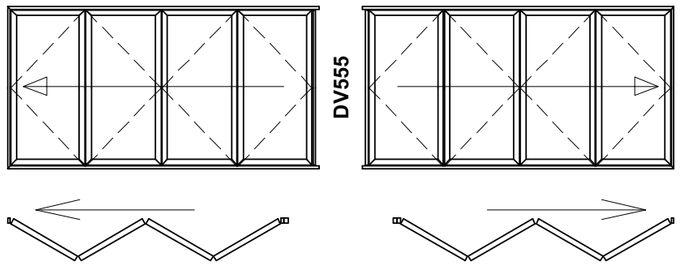

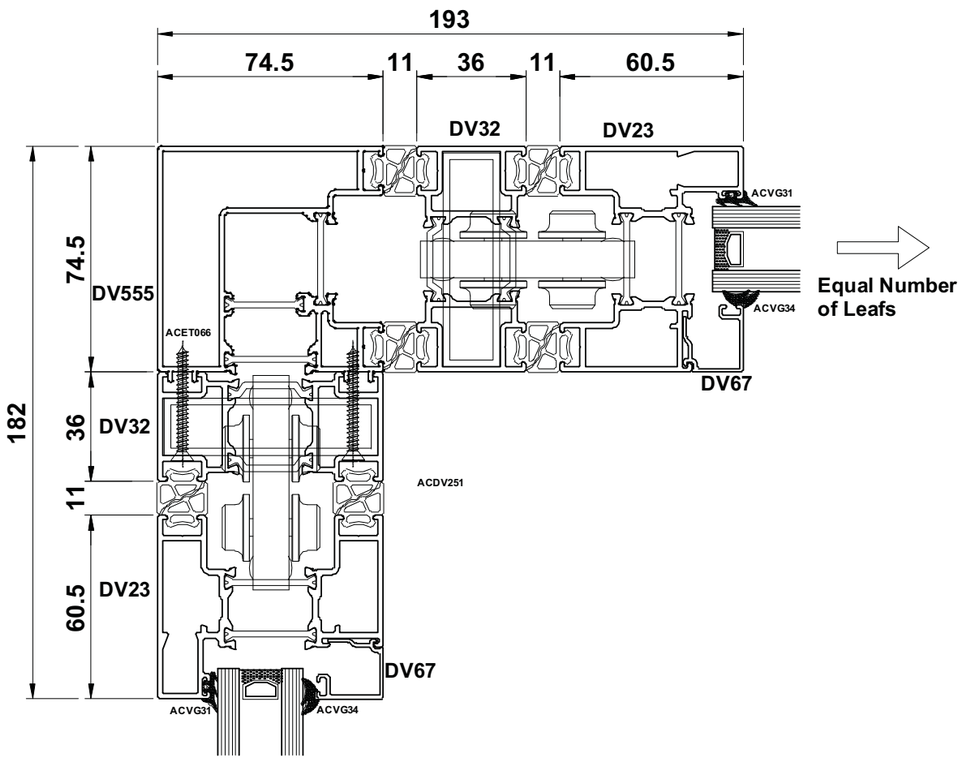

DV555 Height Deductions

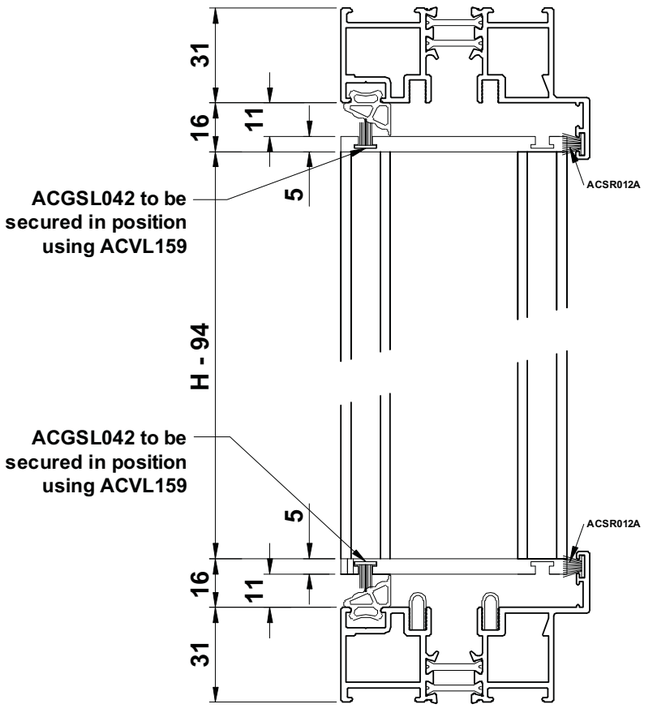

NOTE:
Where DV32 is used, ACSR012A should replace ACDV244

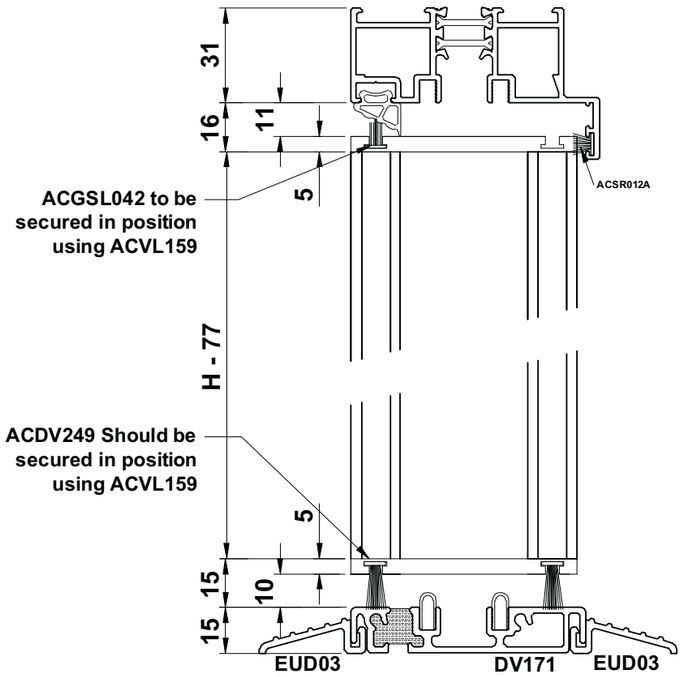

Do Not Scale From This Drawing

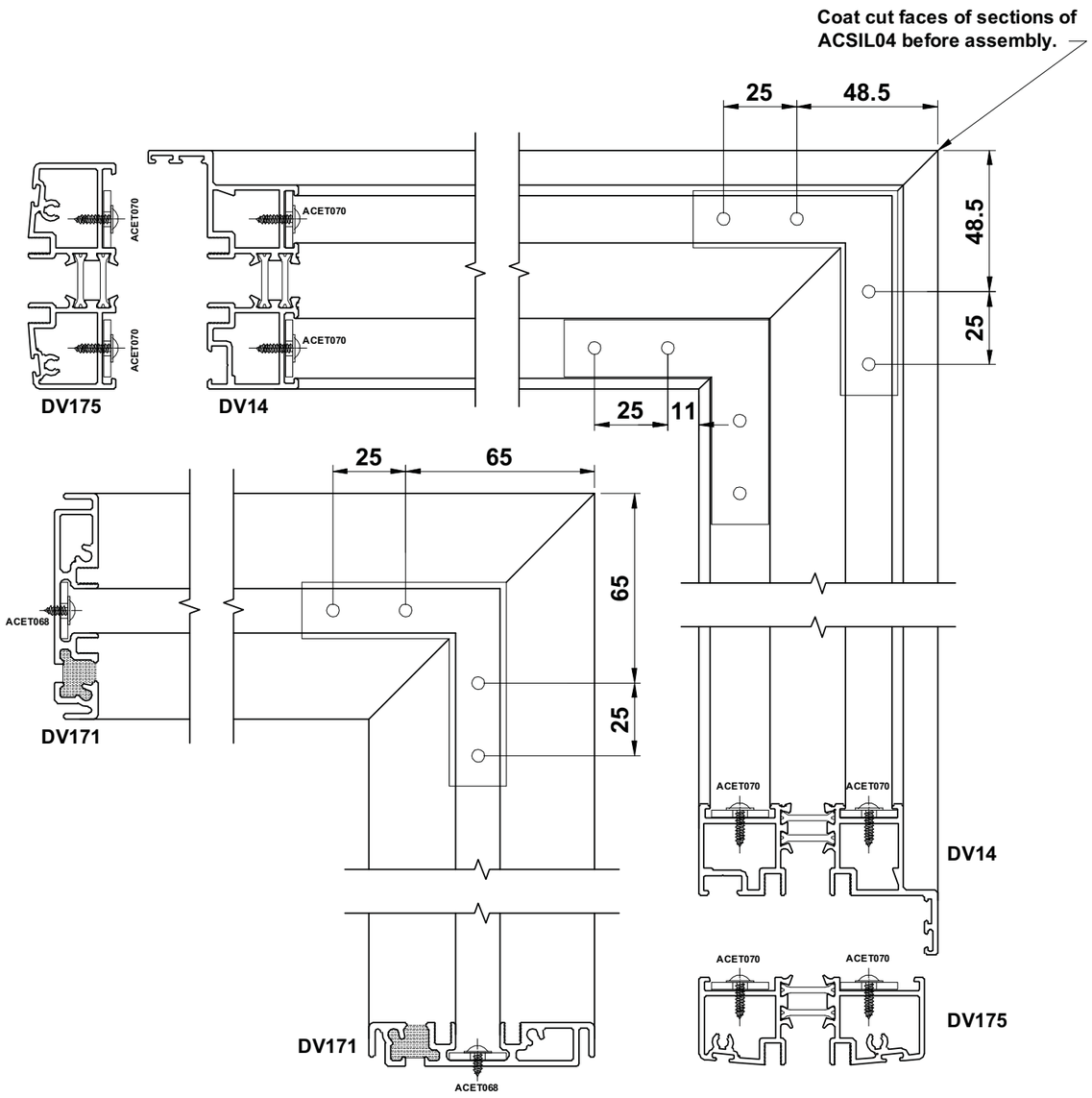

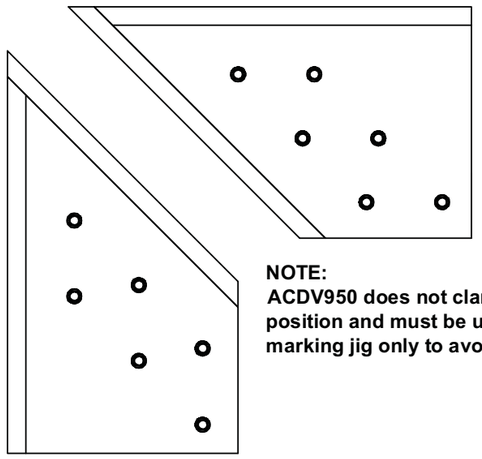

NOTE:
ACDV950 does not clamp into position and must be used as a marking jig only to avoid injury.

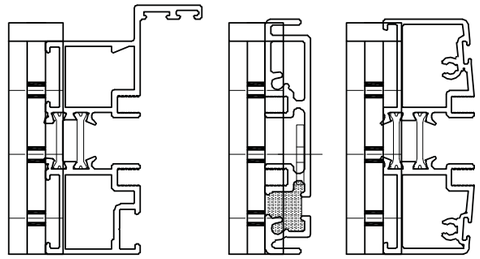

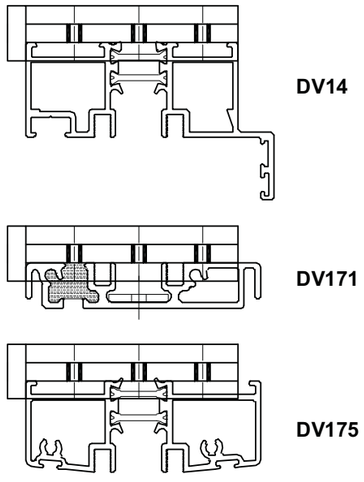

Do Not Scale From This Drawing